Electrical network protection

Easergy Sepam series 60

User's manual
01/2021



Green Premium™ Product

Schneider Electric

Safety instructions

Safety symbols and messages

Read these instructions carefully and look at the equipment to become familiar with the device before trying to install, operate, service or maintain it. The following special messages may appear throughout this bulletin or on the equipment to warn of potential hazards or to call attention to information that clarifies or simplifies a procedure.



ANSI symbol.



IEC symbol.

Risk of electric shock

The addition of either symbol to a Danger or Warning safety label indicates that an electrical hazard exists, which will result in personal injury if the instructions are not followed.



Safety alert

This is the safety alert symbol. It is used to alert you to potential personal injury hazards. Obey all safety messages that follow this symbol to avoid possible injury or death.

Safety messages

⚠ DANGER
DANGER indicates an imminently hazardous situation which, if not avoided, **will result in** death or serious injury.

⚠ WARNING
WARNING indicates a potentially hazardous situation which, if not avoided, **can result in** death or serious injury.

⚠ CAUTION
CAUTION indicates a potentially hazardous situation which, if not avoided, **can result in** minor or moderate injury.

NOTICE
NOTICE is used to address practices not related to physical injury.

Important notes

Restricted liability

Electrical equipment should be serviced and maintained only by qualified personnel. No responsibility is assumed by Schneider Electric for any consequences arising out of the use of this manual. This document is not intended as an instruction manual for untrained persons.

Device operation

The user is responsible for checking that the rated characteristics of the device are suitable for its application. The user is responsible for reading and following the device's operating and installation instructions before attempting to commission or maintain it. Failure to follow these instructions can affect device operation and constitute a hazard for people and property.

Protective grounding

The user is responsible for compliance with all the existing international and national electrical codes concerning protective grounding of any device.

General contents

Introduction 1

Metering functions 2

Protection functions 3

Control and monitoring functions 4

Modbus communication 5

Installation 6

Use 7

General contents

General contents 2

Introduction 7

Selection guide by application 8

Protection functions suitable for low voltage 10

Presentation 12

Modular architecture 13

Selection table 14

Technical characteristics 16

Environmental characteristics 17

General settings 22

Characteristics 23

Processing of measured signals 24

Phase current
Residual current 26

Demand current and peak demand currents 27

Phase-to-phase voltage
Phase-to-neutral voltage 28

Residual voltage
Neutral point voltage 29

Positive sequence voltage
Negative sequence voltage 30

Frequency 31

Active, reactive
and apparent power 32

Peak demand active and reactive power
Power factor (cos φ) 34

Active and reactive energy 35

Temperature 36

Rotation speed 37

Phasor diagram 38

Network diagnosis functions 39

Tripping context
Tripping current 39

Number of phase fault trips
Number of earth fault trips 40

Negative sequence / unbalance 41

Current total harmonic distortion
Voltage total harmonic distortion 42

Phase displacement φ0, φ0S
Phase displacement φ1, φ2, φ3 43

Disturbance recording 44

Data log (DLG) 45

Synchro-check:
voltage comparison and
out-of-sync context 50

General contents

Machine operation assistance functions 51

Thermal capacity used
Cooling time constant 51

Operating time before tripping
Waiting time after tripping 52

Running hours and operating time counter
Starting current and starting time 53

Number of starts before inhibition
Start inhibit time 54

Apparent positive sequence impedance
Apparent phase-to-phase impedances 55

Capacitance 56

Capacitor unbalance current 57

Motor start report (MSR) 58

Motor start trend (MST) 60

Switchgear diagnosis functions 63

VT supervision 63

CT supervision 65

Trip circuit and open/closed matching supervision 66

Closing circuit and open/close orders supervision 67

Cumulative breaking current
Number of operations 68

Operating time
Charging time 69

Number of racking out operations 70

Protection functions 72

Setting ranges 74

Overspeed 79

Underspeed 80

Underimpedance 81

Synchro-check 82

Undervoltage (L-L or L-N) 84

Positive sequence undervoltage and phase rotation direction check 85

Remanent undervoltage 86

Directional active overpower 87

Directional reactive overpower 88

Phase undercurrent 89

Directional active underpower 91

Temperature monitoring 92

Field loss 93

Negative sequence / unbalance 96

Negative sequence overvoltage 99

General contents

Excessive starting time, locked rotor **100**
Thermal overload for cables **102**
Thermal overload for capacitors **107**
Thermal overload for motors **121**
Thermal overload for machines **135**
Breaker failure **146**
Phase overcurrent **148**
Earth fault **150**
Voltage-restrained overcurrent **153**
Overvoltage (L-L or L-N) **155**
Neutral voltage displacement **157**
Restricted earth fault differential **158**
Starts per hour **161**
Directional phase overcurrent **165**
Directional earth fault **168**
Recloser **175**
Overfrequency **179**
Underfrequency **180**
Rate of change of frequency **181**
General **184**

Control and monitoring functions 191

Description **192**
Definition of symbols **193**
Logic input / output assignment **194**
Switchgear control **197**
Latching / acknowledgement **203**
TC / switchgear position discrepancy Tripping **204**
Disturbance-recording trigger **205**
Switching of groups of settings **206**
Logic discrimination **207**
Load shedding **222**
Restart **223**
Generator shutdown and tripping **225**
Automatic transfer **229**
Automatic "one out of two" transfer **231**
Automatic "two out of three" transfer **239**
Triggering the Motor start report (MSR) **249**
Activating / Deactivating the Data log function (DLG) **250**
Change of phase rotation direction **251**
Local indication **252**

General contents

Local control 255
Control matrix 258
Logic equations 260
Self-tests and fail-safe position 264

Modbus Communication 271

Presentation 272
Managing the Modbus protocol 273
Configuring the communication interfaces 274
Commissioning and diagnosis 280
Data addresses and coding 287
Addresses in direct-access mode 289
Time-setting and synchronization 308
Time-tagged events 310
Transferring records 312
Access to remote settings 315
Customized table 317
Security 318
Reading Sepam identification 319
Appendix 1. Modbus protocol 320
Appendix 2. Function settings 325

Installation 337

Precautions 339
Equipment identification 340
List of Sepam series 60 references 342
Base unit 344
1 A/5 A current transformers 358
LPCT type current sensors 361
CSH120, CSH200, CSH300 Core balance CTs 364
CSH30 interposing ring CT 366
ACE990 Core balance CT interface 368
Voltage transformers 370
MES120, MES120G, MES120H 14 input / 6 output modules 371
Remote modules 374
MET148-2 Temperature sensor module 376
MSA141 Analog output module 378
DSM303 Remote advanced UMI module 380
MCS025 Synchro-check module 382
Communication accessory selection guide 386
Connection of communication interfaces 387
ACE949-2 2-wire RS 485 network interface 389
ACE959 4-wire RS 485 network interface 390

General contents

ACE937 fiber optic interface 391
ACE969TP-2 and ACE969FO-2 Multi-protocol interfaces 392
ACE850TP and ACE850FO Multi-protocol interfaces 398
ACE909-2 RS 232/RS 485 converter 404
ACE919CA and ACE919CC RS 485/RS 485 converters 406
ECI850
IEC 61850 Sepam server 408

Use 413

User-machine interfaces 414
Description of the advanced UMI 416
Description of the mimic-based UMI 417
Local operation on the UMI 418
SFT2841 setting and operating software 426
SFT2841 software
Mimic-diagram editor 443

Commissioning 453

Principles 453
Methods 454
Testing and metering equipment required 455
General examination and preliminary actions 456
Checking of phase current and voltage input connections 457
Checking of residual current
and residual voltage input connections 462
Checking of residual current input connection 463
Checking of residual voltage input connection 464
Checking of Sepam C60 unbalance current
input connections 466
Checking of logic input and output connections 467
Checking of GOOSE logic input connections 468
Checking of optional module connections 469
Validation of the complete protection chain 470
Test sheet 471

Maintenance 473

Troubleshooting assistance 473
Replacing the base unit
Replacing the battery 477
Maintenance tests 478
Firmware modifications 479

Contents

Selection guide by application	**8**
Protection functions suitable for low voltage	**10**
Presentation	**12**
Modular architecture	**13**
Selection table	**14**
Technical characteristics	**16**
Environmental characteristics	**17**

Selection guide by application

The selection guide by application suggests Sepam type(s) suitable for your protection requirements, based on your application characteristics. The most typical applications are presented along with the associated Sepam type.
Each application example is described:

- ■ By a single-line diagram specifying
  - □ the device to be protected
  - □ the network configuration
  - □ the position of the metering sensors
- ■ By the standard and specific Sepam functions to be implemented to protect the application concerned.



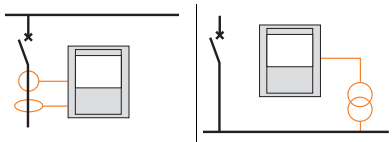



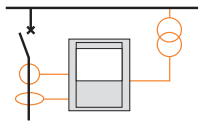

		Series 20				Series 40				
Protections										
	Current	■	■			■	■	■	■	■
	Voltage			■	■	■	■	■		■
	Frequency			■	■	■	■	■		■
	Specific		Breaker failure		Disconnection (ROCOF)		Directional earth fault	Directional earth fault and phase	Directional earth fault	
Applications										
Substation		S20	S24			S40	S41	S42	S43	S44
						S50 (4)	S51 (4)	S52 (4)	S53 (4)	S54
Busbar				B21	B22					
Transformer		T20	T24			T40		T42		
						T50 (5)		T52 (5)		
Motor		M20				M40	M41			
Generator						G40				
Capacitor										
Characteristics										
Logic inputs/ outputs	Inputs	0 to 10		0 to 10		0 to 10				
	Outputs	4 to 8		4 to 8		4 to 8				
Temperature sensors		0 to 8		0 to 8		0 to 16				
Channel	Current	3I + I0		–		3I + I0				
	Voltage	–		3V + V0		3V				
	LPCT (1)	Yes		–		Yes				
Communication ports		1 to 2		1 to 2		1 to 2				
Control	Matrix (2)	Yes		Yes		Yes				
	Logic equation editor	–		–		Yes				
	Logipam (3)	–		–		–				
Other	Memory cartridge with settings	–		–		–				
	Backup battery	–		–		–				

(1) LPCT: Low-Power Current Transducer conforming to standard IEC 60044-8.
(2) Control matrix used for simple assignment of data from the protection, control and monitoring functions.
(3) Logipam: Ladder language PC programming environment for extended use of Sepam series 80 functions.
(4) S5X applications are identical to S4X applications with the following additional functions:
- *■ earth fault and phase overcurrent cold load pick-up*
- *■ broken conductor detection*
- *■ fault locator*

(5) T5X applications are identical to T4X applications with the following additional functions:
- *■ earth fault and phase overcurrent cold load pick-up*
- *■ broken conductor detection*

Selection guide by application

The list of protection functions is given for information only.
Direct earthing or impedance earthing have been represented by the same pictogram, i.e. by a direct earthing system.

Series 60



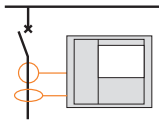

■	■	■	
■	■	■	
■	■	■	
	Directional earth fault	Directional earth fault and phase	
		S62	
		T62	
	M61		
		G62	
	C60		
0 to 28			
4 to 16			
0 to 16			
3I + I0			
3V, 2U + V0 or Vnt			
Yes			
1 to 2			
Yes			
Yes			
–			
Yes			
Yes			

Series 80





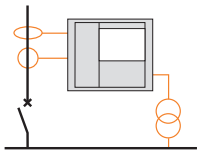

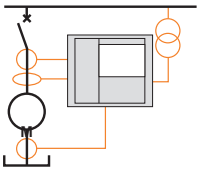

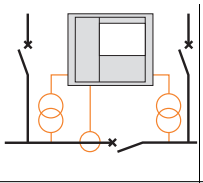

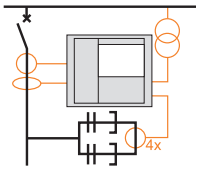

■	■	■	■	■	■	■	■
■	■	■	■	■	■	■	■
■	■	■	■	■	■	■	■
	Directional earth fault	Directional earth fault and phase	Disconnection (ROCOF)	Transformer or machine-transformer unit differential	Machine differential	Busbar voltage and frequency protection	Capacitor bank unbalance
S80	S81	S82	S84				
B80						B83	
	T81	T82		T87			
	M81			M88	M87		
		G82		G88	G87		
							C86
0 to 42				0 to 42		0 to 42	0 to 42
5 to 23				5 to 23		5 to 23	5 to 23
0 to 16				0 to 16		0 to 16	0 to 16
3I + 2 x I0				2 x 3I + 2 x I0		3I + I0	2 x 3I + 2 x I0
3V + V0				3V + V0		2 x 3V + 2 x V0	3V + V0
Yes				Yes		Yes	Yes
2 to 4				2 to 4		2 to 4	2 to 4
Yes				Yes		Yes	Yes
Yes				Yes		Yes	Yes
Yes				Yes		Yes	Yes
Yes				Yes		Yes	Yes
Yes				Yes		Yes	Yes

All the information relating to the Sepam range can be found in the following documents:

- *Sepam catalog, reference SEPED303005EN*
- *Sepam series 20 user's manual, reference PCRED301005EN*
- *Sepam series 40 user's manual, reference PCRED301006EN*
- *Easergy Sepam series 60 user's manual, reference SEPED310017EN*
- *Easergy Sepam series 80 functions user's manual, reference SEPED303001EN*
- *Easergy Sepam series 80 Modbus communication user's manual, reference SEPED303002EN*
- *Easergy Sepam series 80 operation manual, reference SEPED303003EN*
- *Sepam DNP3 communication user's manual, reference SEPED305001EN*
- *Sepam IEC 60870-5-103 communication user's manual, reference SEPED305002EN*
- *Sepam IEC 61850 communication user's manual, reference SEPED306024EN*

Protection functions suitable for low voltage

Low voltage earthing systems

There are 4 low voltage (LV) earthing systems designated by a 2 or 3-letter acronym:

- TN-S
- TN-C
- TT
- IT

The letters making up the acronym have the following meanings:

Letter		Meaning
First letter		**Transformer neutral point**
	I	Earthed with an impedance
	T	Directly earthed
Second letter		**Electrical exposed conductive parts of the consumer**
	T	Earthed
	N	Connected to the neutral conductor
Third letter (optional)		**Protective Earth conductor**
	S	Separate N neutral conductor and PE Protective Earth conductor
	C	Combined N neutral conductor and PE Protective Earth conductor (PEN)

Protection functions suitable for low voltage

Compatibility of Sepam low voltage protection functions

Sepam protection functions can be used with low voltage (LV) as long as the conditions below are met:

- The distribution circuit must be rated higher than 32 A.
- The installation must comply with standard IEC 60364.

For additional information about the compatibility of Sepam protection functions with low voltage, please contact Schneider Electric technical support.

The table below lists the Sepam protection functions suitable for low voltage according to the earthing system used. Sepam protection functions not listed in this table are not suitable for low voltage. The protection functions listed in this table are available according to the Sepam type.

Protection	ANSI code	Earthing system				Comments
		TN-S	TN-C	TT	IT	
Phase overcurrent	50/51	■	■	■	■	Neutral conductor not protected
Earth fault/Sensitive earth fault	50N/51N	■	■	■	(1)	
Earth fault/Sensitive earth fault	50G/51G	■	■	■	(3)	
Negative sequence/unbalance	46	■	■	■	■	Threshold to be adapted to the phase unbalance
Thermal overload for cables/capacitor/ transformer/motor/generic	49RMS	■	■	■	■	Neutral conductor not protected
Restricted earth fault	64REF	■	■	■	(3)	
Two-winding transformer differential	87T	■	■	■	■	
Directional phase overcurrent	67	■	■	■ (4)	■ (4)	
Directional earth fault	67N/67NC					Incompatible with LV diagrams (4-wire)
Directional active overpower	32P	■	■	(2)	(2)	
Directional reactive overpower	32Q	■	■	(2)	(2)	
Undervoltage (L-L or L-N)	27	■	■	■	■	
Remanent undervoltage	27R	■	■	■	■	
Overvoltage (L-L or L-N)	59	■	■	■	■	
Neutral voltage displacement	59N	■	■	(4)	(4)	Residual voltage not available with 2 VTs
Negative sequence overvoltage	47	■	■	■	■	
Overfrequency	81H	■	■	■	■	
Underfrequency	81L	■	■	■	■	
Rate of change of frequency	81R	■	■	■	■	
Synchro-check	25	■	■	■	■	

■ *: Protection function suitable for low voltage (according to Sepam)*

(1) *Not recommended even on the second fault.*

(2) *2-wattmeter method not suitable for unbalanced loads.*

(3) *Residual current too low in IT.*

(4) *2 phase-to-phase VTs.*

Presentation

The Sepam range of protection relays is designed for the operation of machines and electrical distribution networks of industrial installations and utility substations at all levels of voltage.
It includes 4 families
- *Sepam series 20*
- *Sepam series 40*
- *Easergy Sepam series 60*
- *Easergy Sepam series 80*

to cover all needs, from the simplest to the most complete.

PE80711



Easergy Sepam series 60 with integrated advanced UMI.

Easergy Sepam series 60 main characteristics

- protection of closed ring networks or networks with parallel incomers by directional protection and logic discrimination
- directional earth fault protection for impedance-earthed and isolated or compensated neutral systems
- advanced protection of transformers, motors and generators
- synchro-check between 2 networks before coupling
- measurement of harmonic distortion, current and voltage, to assess network power quality
- 28 inputs / 16 outputs for comprehensive equipment control
- mimic-based UMI for local switchgear control
- SFT2841 parameter setting and operating software, a simple and complete tool that is indispensable for all Sepam users:
  - assisted preparation of parameter and protection settings
  - complete information during commissioning
  - remote equipment management and diagnostics during operation
- logic equation editor built into the SFT2841 software to adapt the predefined control functions
- 1 communication port to integrate Sepam in 1 communication network
- removable memory cartridge to get equipment in operation again quickly after the replacement of a faulty base unit
- battery backup to save historical and disturbance recording data.

Selection guide

The Easergy Sepam series 60 family includes 8 types to offer the right solution for each application.

Specific protection functions available	Applications				
	Substation	**Transformer**	**Motor**	**Generator**	**Capacitor**
	S60	T60		G60	C60
Directional earth fault			M61		
Directional earth fault and phase overcurrent	S62	T62		G62	

Modular architecture

Flexibility and upgrading capability

To adapt to as many situations as possible, and allow for future installation upgrading, optional modules may be added to Sepam at any time for new functions.

1 **Base unit, with different types of User-Machine Interface (UMI):**
- ■ Integrated mimic-based UMI
- ■ Integrated or remote advanced UMI

2 **Parameter and protection settings saved on removable memory cartridge**

3 **28 logic inputs and 16 relay outputs**
with 2 optional modules providing 14 inputs and 6 outputs

4 **1 communication port**
- ■ Connection:
- □ direct, to 2-wire RS 485, 4-wire RS 485 or fiber optic networks
- □ to Ethernet TCP/IP network via PowerLogic Ethernet server (Transparent Ready™)
- ■ Protocols:
- □ DNP3 and IEC 60870-5-103 with ACE969 communication interface
- □ IEC 61850 and Modbus TCP with ACE850 communication interface

5 **Processing of data from 16 temperature sensors**
Pt100, Ni100 or Ni120

6 **1 low level analog output**
0-1 mA, 0-10 mA, 4-20 mA or 0-20 mA

7 **Synchro-check module**

8 **Software tools:**
- ■ Sepam parameter and protection setting and adaptation of the predefined functions
- ■ Local or remote installation operation
- ■ Retrieval and display of disturbance recording data

PE80712

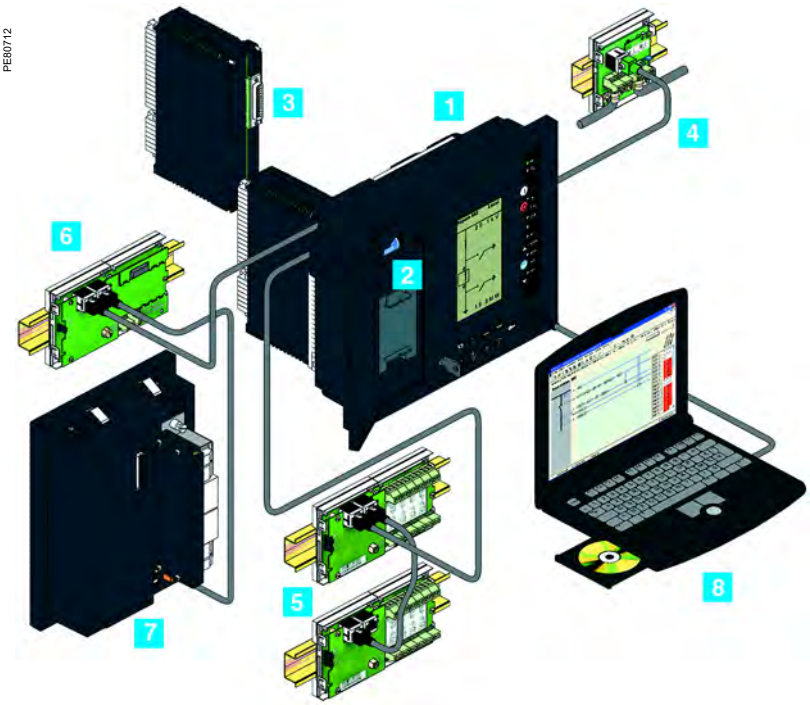

Ease of installation

- ■ Light, compact base unit
- ■ Easy to integrate due to Sepam's adaptation capabilities:
- □ universal supply voltage for Sepam and its logic inputs: 24 to 250 V DC
- □ phase currents can be measured by 1 A or 5 A current transformers, or LPCT (Low Power Current Transducer) type sensors
- □ residual current calculated or measured by a choice of methods to fit requirements
- ■ The same, easy-to-install remote modules for all Sepam units:
- □ mounted on DIN rail
- □ connected to the Sepam base unit by prefabricated cords

Commissioning assistance

- ■ Predefined functions implemented by simple parameter setting
- ■ User-friendly, powerful SFT2841 PC setting software tool used on all Sepam units to provide users with all the possibilities offered by Sepam

Intuitive use

- ■ Integrated or remote advanced User Machine Interface (UMI) installed in the most convenient place for the facility manager
- ■ Integrated mimic-based User Machine Interface for local control of switchgear
- ■ User-friendly User Machine Interface, with direct access to data
- ■ Clear graphic LCD display of all data required for local operation and installation diagnosis
- ■ Working language can be customized to be understood by all users.

Selection table

		Substation		Transformer		Motor	Generator		Cap.
Protection	**ANSI code**	**S60**	**S62**	**T60**	**T62**	**M61**	**G60**	**G62**	**C60**
Phase overcurrent (1)	50/51	4	4	4	4	4	4	4	4
Earth fault / Sensitive earth fault (1)	50N/51N 50G/51G	4	4	4	4	4	4	4	4
Breaker failure	50BF	1	1	1	1	1	1	1	1
Negative sequence / unbalance	46	2	2	2	2	2	2	2	2
Thermal overload for cables	49RMS		1						
Generic thermal overload (1) or	49RMS			2	2	2	2	2	
Thermal overload for motors/transformers				2	2	1			
Thermal overload for capacitors	49RMS								1
Restricted earth fault	64REF			2	2				
Directional phase overcurrent (1)	67		2		2			2	
Directional earth fault (1)	67N/67NC		2		2	2		2	
Directional active overpower	32P		2		2	2	2	2	
Directional reactive overpower	32Q					1	1	1	
Directional active underpower	37P						2	2	
Phase undercurrent	37					1			
Excessive starting time, locked rotor	48/51LR					1			
Starts per hour	66					1			
Field loss (underimpedance)	40					1	1	1	
Overspeed (2 set points) (2)	12					□	□	□	
Underspeed (2 set points) (2)	14					□	□	□	
Voltage-restrained overcurrent	50V/51V						1	1	
Underimpedance	21B						1	1	
Undervoltage (L-L or L-N)	27	2	2	2	2	2	2	2	2
Positive sequence undervoltage	27D	2	2	2	2	2	2	2	2
Remanent undervoltage	27R	2	2	2	2	2	2	2	2
Overvoltage (L-L or L-N)	59	2	2	2	2	2	2	2	2
Neutral voltage displacement	59N	2	2	2	2	2	2	2	2
Negative sequence overvoltage	47	2	2	2	2	2	2	2	2
Overfrequency	81H	2	2	2	2	2	2	2	2
Underfrequency	81L	4	4	4	4	4	4	4	4
Rate of change of frequency	81R	2	2				2	2	
Recloser (4 cycles) (2)	79	□	□						
Thermostat / Buchholz (2)	26/63			□	□	□	□	□	
Temperature monitoring (16 RTDs) (3)	38/49T			□	□	□	□	□	□
Synchro-check (4)	25	□	□	□	□		□	□	
Control and monitoring									
Circuit breaker / contactor control	94/69	□	□	□	□	□	□	□	□
Automatic transfer (AT) (2)		□	□	□	□		□	□	
Load shedding / automatic restart						■			
De-excitation							■	■	
Genset shutdown							■	■	
Logic discrimination (2)	68	□	□	□	□	□	□	□	□
Latching / acknowledgement	86	■	■	■	■	■	■	■	■
Annunciation	30	■	■	■	■	■	■	■	■
Triggering a Motor start report		■	■	■	■	■	■	■	■
Activating/Deactivating a Data log		■	■	■	■	■	■	■	■
Change of phase rotation direction		■	■	■	■	■	■	■	■
Switching of groups of settings		■	■	■	■	■	■	■	■
Adaptation using logic equations		■	■	■	■	■	■	■	■

The figures indicate the number of relays available for each protection function.

■ *standard*, □ *optional*

(1) *Protection functions with 2 groups of settings*

(2) *According to parameter setting and optional MES120 input/output modules*

(3) *With optional MET148-2 temperature input module*

(4) *With optional MCS025 synchro-check module*

Selection table

		Substation		Transformer		Motor	Generator		Cap.
Metering		**S60**	**S62**	**T60**	**T62**	**M61**	**G60**	**G62**	**C60**
Phase current I1, I2, I3 RMS		■	■	■	■	■	■	■	■
Measured residual current I0, calculated I0Σ		■	■	■	■	■	■	■	■
Demand current I1, I2, I3		■	■	■	■	■	■	■	■
Peak demand current IM1, IM2, IM3		■	■	■	■	■	■	■	■
Voltage U21, U32, U13, V1, V2, V3		■	■	■	■	■	■	■	■
Residual voltage V0		■	■	■	■	■	■	■	■
Positive sequence voltage Vd / rotation direction		■	■	■	■	■	■	■	■
Negative sequence voltage Vi		■	■	■	■	■	■	■	■
Frequency		■	■	■	■	■	■	■	■
Active power P, P1, P2, P3		■	■	■	■	■	■	■	■
Reactive power Q, Q1, Q2, Q3		■	■	■	■	■	■	■	■
Apparent power S, S1, S2, S3		■	■	■	■	■	■	■	■
Peak demand power PM, QM		■	■	■	■	■	■	■	■
Power factor		■	■	■	■	■	■	■	■
Calculated active and reactive energy (±Wh, ±VARh)		■	■	■	■	■	■	■	■
Active and reactive energy by pulse counting (1) (±Wh, ±VARh)		□	□	□	□	□	□	□	□
Temperature (16 RTDs) (3)				□	□	□	□	□	
Rotation speed (2)						□	□	□	
Neutral point voltage Vnt						■	■	■	
Network and machine diagnosis									
Tripping context		■	■	■	■	■	■	■	■
Tripping current TripI1, TripI2, TripI3		■	■	■	■	■	■	■	■
Phase fault and earth fault trip counters		■	■	■	■	■	■	■	■
Unbalance ratio / negative sequence current Ii		■	■	■	■	■	■	■	■
Harmonic distortion (THD), current and voltage Ithd, Uthd		■	■	■	■	■	■	■	■
Phase displacement φ0, φ0Σ		■	■	■	■	■	■	■	■
Phase displacement φ1, φ2, φ3		■	■	■	■	■	■	■	■
Disturbance recording		■	■	■	■	■	■	■	■
Motor start report (MSR)						■			
Motor start trend (MST)						■			
Data log (DLG)		■	■	■	■	■	■	■	■
Thermal capacity used			■	■	■	■	■	■	■
Remaining operating time before overload tripping			■	■	■	■	■	■	■
Waiting time after overload tripping			■	■	■	■	■	■	■
Running hours counter / operating time				■	■	■	■	■	■
Starting current and time						■			
Start inhibit time						■			
Number of starts before inhibition						■			
Apparent positive sequence impedance Zd		■	■	■	■	■	■	■	■
Apparent phase-to-phase impedances Z21, Z32, Z13		■	■	■	■	■	■	■	■
Third harmonic voltage, neutral point or residual							■	■	
Difference in amplitude, frequency and phase of voltages compared for synchro-check (4)		□	□	□	□		□	□	
Capacitor unbalance current and capacitance									■
Switchgear diagnosis	**ANSI code**								
CT / VT supervision	60/60FL	■	■	■	■	■	■	■	■
Trip circuit supervision (2)	74	□	□	□	□	□	□	□	□
Cumulative breaking current		■	■	■	■	■	■	■	■
Number of operations, operating time, charging time, number of racking out operations (2)		□	□	□	□	□	□	□	□
Modbus, IEC 60870-5-103, DNP3 communication or IEC 61850 (Editions 1 and 2)									
Measurement readout (5) (6)		□	□	□	□	□	□	□	□
Remote indication and time tagging of events (5) (6)		□	□	□	□	□	□	□	□
Remote control orders (5) (6)		□	□	□	□	□	□	□	□
Remote protection setting (5) (6)		□	□	□	□	□	□	□	□
Transfer of disturbance recording data (5) (6)		□	□	□	□	□	□	□	□
IEC 61850 GOOSE message(6)		□	□	□	□	□	□	□	□

■ *standard,* □ *optional*

(1) *Protection functions with 2 groups of settings*
(2) *According to parameter setting and optional MES120 input/output modules*
(3) *With optional MET148-2 temperature input module*
(4) *With optional MCS025 synchro-check module*
(5) *With ACE949-2, ACE959, ACE937, ACE969TP-2 or ACE969FO-2 communication interface*
(6) *With ACE850TP or ACE850FO communication interface*

Technical characteristics

Weight

	Base unit with advanced UMI	Base unit with mimic-based UMI
Minimum weight (base unit without MES120)	2.4 kg (5.29 lb)	3.0 kg (6.61 lb)
Maximum weight (base unit with 2 MES120)	3.5 kg (7.72 lb)	4.0 kg (8.82 lb)

Sensor inputs

Phase current inputs	**1 A or 5 A CT**
Input impedance	< 0.02 Ω
Consumption	< 0.02 VA (1 A CT) < 0.5 VA (5 A CT)
Continuous thermal withstand	4 In
1 second overload	100 In (500 A)

Voltage inputs	**Phase**	**Residual**
Input impedance	> 100 kΩ	> 100 kΩ
Consumption	< 0.015 VA (100 V VT)	< 0.015 VA (100 V VT)
Continuous thermal withstand	240 V	240 V
1-second overload	480 V	480 V
Isolation of inputs from other isolated groups	Enhanced	Enhanced

Relay outputs

Control relay outputs O1 to O3 and Ox01 (1)

Voltage	DC	24/48 V DC	127 V DC	220 V DC	250 V DC	-
	AC (47.5 to 63 Hz)	-	-	-	-	100 to 240 V AC
Continuous current		8 A	8 A	8 A	8 A	8 A
Breaking capacity	Resistive load	8 A / 4 A	0.7 A	0.3 A	0.2 A	-
	L/R Load < 20	6 A / 2 A	0.5 A	0.2 A	-	-
	L/R Load < 40 ms	4 A / 1 A	0.2 A	0.1 A	-	-
	Resistive load	-	-	-	-	8 A
	p.f. load > 0.3	-	-	-	-	5 A
Making capacity		< 15 A for 200 ms				
Isolation of outputs from other isolated groups		Enhanced				

Annunciation relay output O5 and Ox02 to Ox06

Voltage	DC	24/48 V DC	127 V DC	220 V DC	250 V DC	-
	AC (47.5 to 63 Hz)	-	-	-	-	100 to 240 V AC
Continuous current		2 A	2 A	2 A	2 A	2 A
Breaking capacity	Resistive load	2 A / 1 A	0.6 A	0.3 A	0.2 A	-
	L/R Load < 20 ms	2 A / 1 A	0.5 A	0.15 A	-	-
	p.f. load > 0.3	-	-	-	-	1 A
Isolation of outputs from other isolated groups		Enhanced				

Power supply

Voltage	24 to 250 V DC	-20 % / +10 %
Maximum consumption	< 16 W	
Inrush current	< 10 A 10 ms	
Acceptable ripple content	12%	
Acceptable momentary outages	20 ms	

Battery

Format	1/2 AA lithium 3.6 V
Service life	10 years Sepam energized
	Minimum 3 years, typical 6 years

Analog output (MSA141 module)

Current	4 - 20 mA, 0 - 20 mA, 0 - 10 mA, 0 - 1 mA
Load impedance	< 600 Ω (wiring included)
Accuracy	0.50 % full scale or 0.01 mA

(1) *Relay outputs complying with clause 6.7 of standard C37.90 (30 A, 200 ms, 2000 operations).*

Environmental characteristics

Electromagnetic compatibility	Standard	Level/Class	Value
Emission tests			
Disturbing field emission	CISPR 22		
	EN 55022	A	
Conducted disturbance emission	CISPR 22		
	EN 55022	A	
Immunity tests - Radiated disturbances			
Immunity to radiated fields	IEC 60255-22-3		10 V/m; 80 MHz - 1 GHz
	IEC 61000-4-3	III	10 V/m; 80 MHz - 2 GHz
			30 V/m non-modulated; 800MHz - 2GHz (1)
	ANSI C37.90.2		20 V/m; 80 MHz - 1 GHz
Electrostatic discharge	IEC 61000-4-2 (1)	IV	15 kV air ; 8 kV contact
	IEC 60255-22-2		8 kV air; 6 kV contact
	ANSI C37.90.3		15 kV air; 8 kV contact
Immunity to magnetic fields at network frequency (2)	IEC 61000-4-8	4	30 A/m (continuous) - 300 A/m (1-3 s)
Immunity to pulsed magnetic fields (1)	IEC 61000-4-9	IV	600 A/m
Immunity to magnetic fields with damped oscillating waves (1)	IIEC 61000-4-10	5	100 A/m
Immunity tests - Conducted disturbances			
Immunity to conducted RF disturbances	IEC 61000-4-6	III	10 V
Electrical fast transients/burst	IEC 61000-4-4	IV	4 kV; 2.5 kHz
	ANSI C37.90.1		4 kV; 5 kHz
1 MHz damped oscillating wave	ANSI C37.90.1		2.5 kV CM; 2.5 kV DM
100 kHz damped sinusoidal wave	IEC 61000-4-12	III	2 kV MC
		IV (1)	4 kV MC ; 2,5 kV DM
Slow damped oscillating wave (100 kHz to 1 MHz)	IEC 61000-4-18	III	
Fast damped oscillating wave (3 MHz, 10 MHz, 30 MHz)	IEC 61000-4-18	III	
Surges	IEC 61000-4-5	III	2 kV CM; 1 kV DM
	GOST R 50746-2000 (1)	4	200 A
Immunity to conducted disturbances in common mode from 0 Hz to 150 kHz	IEC 61000-4-16	III	
Voltage interruptions	IEC 60255-11		100% for 100 ms
Mechanical robustness	**Standard**	**Level/Class**	**Value**
Energized			
Vibrations	IEC 60255-21-1	2	1 Gn; 10 Hz - 150 Hz
	IEC 60068-2-6	Fc	3 Hz - 13.2 Hz; a = ±1 mm
	IEC 60068-2-64	2M1	
Shocks	IEC 60255-21-2	2	10 Gn/11 ms
Earthquakes	IEC 60255-21-3	2	2 Gn (horizontal)
			1 Gn (vertical)
De-energized			
Vibrations	IEC 60255-21-1	2	2 Gn; 10 Hz - 150 Hz
Shocks	IEC 60255-21-2	2	27 Gn/11 ms
Jolts	IEC 60255-21-2	2	20 Gn/16 ms

(1) *Test conducted with a mimic-based HMI in the case of GOST performance testing.*
(2) *When protection functions 50N/51N or 67N are used and I0 is calculated on the sum of the phase currents, Is0 must be higher than 0.1In0.*

Environmental characteristics

Climatic withstand	Standard	Level/Class	Value
During operation			
Exposure to cold	IEC 60068-2-1	Ad	-25°C (-13°F)
Exposure to dry heat	IEC 60068-2-2	Bd	+70°C (+158°F)
Continuous exposure to damp heat	IEC 60068-2-78	Cab	10 days; 93% RH; 40°C (104°F)
Salt mist	IEC 60068-2-52	Kb/2	3 days
Influence of corrosion/2-gas test	IEC 60068-2-60	Method 1	21 days; 75% RH; 25°C (77°F); 0.1 ppm H_2S; 0.5 ppm SO_2
Influence of corrosion/4-gas test	IEC 60068-2-60	Method 4	21 days; 70% RH; 25°C (77°F); 0.01 ppm H_2S; 0.2 ppm SO_2; 0.2 ppm NO_2; 0.01 ppm Cl_2
	EIA 364-65A	IIIA	42 days ; 75% RH ; 30 °C (86 °F) ; 0.1 ppm H_2S ; 0.2 ppm SO_2 ; 0.2 ppm NO_2 ; 0.02 ppm Cl_2
In storage (1)			
Temperature variation with specified variation rate	IEC 60068-2-14	Nb	-25°C to +70°C (-13°F to +158°F) 5°C/min
Exposure to cold	IEC 60068-2-1	Ab	-25°C (-13°F)
Exposure to dry heat	IEC 60068-2-2	Bb	+70°C (+158°F)
Continuous exposure to damp heat	IEC 60068-2-78	Cab	56 days; 93% RH; 40°C (104°F)
	IEC 60068-2-30	Db	6 days; 95% RH; 55°C (131°F)

Safety	Standard	Level/Class	Value
Enclosure safety tests			
Front panel tightness	IEC 60529	IP52	Other panels IP20
	NEMA	Type 12	
Fire withstand	IEC 60695-2-11		650°C (1200°F) with glow wire
Electrical safety tests			
1.2/50 µs impulse wave	IEC 60255-5		5 kV (2)
Power frequency dielectric withstand	IEC 60255-5		2 kV 1min (3)
	ANSI C37.90		1 kV 1 min (annunciation output) 1.5 kV 1 min (control output)

Certification			
CE	IEC60255-26 harmonized standard	**European directives:** ■ EMC European Directive CEM 2014/30/EU ■ Low Voltage European Directive 2014/35/EU	
UL	UL508-CSA C22.2 no. 14-95		File E212533
CSA	CSA C22.2 no. 14-95/no. 0.17-00		File 210625

Green Premium™ Product

(1) *Sepam must be stored in its original packaging.*
(2) *Except for communication: 3 kV in common mode and 1 kV in differential mode.*
(3) *Except for communication: 1 kVrms.*
(4) *See the appendix in "Installation and operation" manual SEPED303003EN, "Functional Safety" section*

Contents

General settings	**22**
Characteristics	**23**
Processing of measured signals	**24**
Phase current **Residual current**	**26**
Demand current and peak demand currents	**27**
Phase-to-phase voltage **Phase-to-neutral voltage**	**28**
Residual voltage **Neutral point voltage**	**29**
Positive sequence voltage **Negative sequence voltage**	**30**
Frequency	**31**
Active, reactive and apparent power	**32**
Peak demand active and reactive power **Power factor (cos φ)**	**34**
Active and reactive energy	**35**
Temperature	**36**
Rotation speed	**37**
Phasor diagram	**38**
Tripping context **Tripping current**	**39**
Number of phase fault trips **Number of earth fault trips**	**40**
Negative sequence / unbalance	**41**
Current total harmonic distortion **Voltage total harmonic distortion**	**42**
Phase displacement φ0, φ0S **Phase displacement φ1, φ2, φ3**	**43**
Disturbance recording	**44**
Data log (DLG)	**45**
Synchro-check: **voltage comparison and out-of-sync context**	**50**
Thermal capacity used **Cooling time constant**	**51**
Operating time before tripping **Waiting time after tripping**	**52**
Running hours and **operating time counter** **Starting current and starting time**	**53**
Number of starts before inhibition **Start inhibit time**	**54**
Apparent positive sequence impedance **Apparent phase-to-phase impedances**	**55**

Contents

Capacitance **56**

Capacitor unbalance current **57**

Motor start report (MSR) **58**

Motor start trend (MST) **60**

VT supervision **63**
ANSI code 60FL 63

CT supervision **65**
ANSI code 60 65

Trip circuit and open/closed matching supervision **66**
ANSI code 74 66

Closing circuit and open/close orders supervision **67**
ANSI code 74 67

Cumulative breaking current
Number of operations **68**

Operating time
Charging time **69**

Number of racking out operations **70**

General settings

The general settings define the characteristics of the measurement sensors connected to Sepam and determine the performance of the metering and protection functions used. They are accessed via the SFT2841 setting software "General Characteristics", "CT-VT Sensors" and "Particular characteristics" tabs.

General settings		Selection	Value
In	Rated phase current (sensor primary current)	2 or 3 1 A / 5 ACTs	1 A to 15 k A
		3 LPCTs	25 A to 3150 A (1)
Ib	Base current, according to rated power of equipment(2)		0.2 to 1.3 In
In0	Rated residual current	Sum of 3 phase currents	See In rated phase current
		CSH120, CSH200 or CSH300 core balance CT	2 A or 20 A rating
		1 A/5 A CT	1 A to 15 k A
		Core balance CT + ACE990 (the core balance CT ratio 1/n must be such that 50⩽ n⩽ 1500)	According to current monitored and use of ACE990
Unp	Rated primary phase-to-phase voltage (Vnp: rated primary phase-to-neutral voltage Vnp = Unp/$\sqrt{3}$)		0 A<In≤ 6.25 kA: 220 V ≤ Unp ≤ 250 kV 6.25 kA<In≤15 kA: 220V≤ Unp≤ 20 kV
Uns	Rated secondary phase-to-phase voltage	3 VTs: V1, V2, V3	90 to 230 V
		2 VTs: U21, U32	90 to 120 V
		1 VT: U21	90 to 120 V
		1 VT: V1	90 to 230 V
Uns0	Secondary zero sequence voltage for primary zero sequence voltage Unp/$\sqrt{3}$		Uns/3 or Uns/$\sqrt{3}$
Vntp	Neutral point voltage transformer primary voltage (generator application)		220 V to 250 kV
Vnts	Neutral point voltage transformer secondary voltage (generator application)		57.7 V to 133 V
fn	Rated frequency		50 Hz or 60 Hz
	Phase rotation direction		1-2-3 or u 1-3-2
	Integration period (for demand current and peak demand current and power)		5, 10, 15, 30, 60 min
	Pulse-type accumulated energy meter	Increments active energy	0.1 kWh to 5 MWh
		Increments reactive energy	0.1 kVARh to 5 MVARh
S	Transformer rated apparent power		100 kVA to 999 MVA
	Transformer vector shift		0 to 11
Ωn	Rated speed (motor, generator)		100 to 3600 rpm
R	Number of pulses per rotation (for speed acquisition)		1 to 1800 (Ωn x R/60 ⩽ 1500)
	Zero speed set point		5 to 20 % of Ωn

(1) *In values for LPCT, in Amps: 25, 50, 100, 125, 133, 200, 250, 320, 400, 500, 630, 666, 1000, 1600, 2000, 3150.*

(2) *Even if the value is within the range, it has to be rounded according to the setting step of 1 or 10A (i.e.: Ib = 12.2A → 13A).*

Characteristics

Functions		Measurement range	Accuracy (1)	MSA141	Saving
Metering					
Phase current		0.02 to 40 In	±0.5 %	■	
Residual current	Calculated	0.005 to 40 In	±1 %	■	
	Measured	0.005 to 20 In0	±1 %	■	
Demand current		0.02 to 40 In	±0.5 %		
Peak demand current		0.02 to 40 In	±0.5 %		□
Phase-to-phase voltage		0.06 to 1.2 Unp	±0.5 %	■	
Phase-to-neutral voltage		0.06 to 1.2 Vnp	±0.5 %	■	
Residual voltage		0.04 to 3 Vnp	±1 %		
Neutral point voltage		0.04 to 3 Vntp	±1 %		
Positive sequence voltage		0.05 to 1.2 Vnp	±2 %		
Negative sequence voltage		0.05 to 1.2 Vnp	±2 %		
Frequency		25 to 65 Hz	±0.01 Hz	■	
Active power (total or per phase)		0.015 Sn to 999 MW	±1 %	■	
Reactive power (total or per phase)		0.015 Sn to 999 MVAR	±1 %	■	
Apparent power (total or per phase)		0.015 Sn to 999 MVA	±1 %	■	
Peak demand active power		0.015 Sn to 999 MW	±1 %		□
Peak demand reactive power		0.015 Sn to 999 MVAR	±1 %		□
Power factor		-1 to + 1 (CAP/IND)	±0.01	■	
Calculated active energy		0 to 2.1 x 10^8 MWh	±1 % ±1 digit		□ □
Calculated reactive energy		0 to 2.1 x 10^8 MVARh	±1 % ±1 digit		□ □
Temperature		-30 °C to +200 °C or -22 °F to +392 °F	±1 °C from +20 to +140 °C	■	
Rotation speed		0 to 7200 rpm	±1 rpm		
Network diagnosis assistance					
Tripping context					□
Tripping current		0.02 to 40 In	±5 %		□
Number of trips		0 to 65535	-		□ □
Negative sequence / unbalance		1 to 500 % of Ib	±2 %		
Total harmonic distortion, current		0 to 100 %	±1 %		
Total harmonic distortion, voltage		0 to 100 %	±1 %		
Phase displacement φ0 (between V0 and I0)		0 to 359°	±2°		
Phase displacement φ1, φ2, φ3 (between V and I)		0 to 359°	±2°		
Disturbance recording					□
Amplitude difference		0 to 1.2 Usync1	±1 %		
Frequency difference		0 to 10 Hz	±0.5 Hz		
Phase difference		0 to 359°	±2°		
Out-of-sync context					□
Machine operating assistance					
Thermal capacity used		0 to 800 % (100 % for phase I = Ib)	±1 %	■	□ □
Remaining operating time before overload tripping		0 to 999 min	±1 min		
Waiting time after overload tripping		0 to 999 min	±1 min		
Running hours counter / operating time		0 to 65535 hours	±1 % or ±0.5 h		□ □
Starting current		1.2 Ib to 40 In	±5 %		□
Starting time		0 to 300 s	±300 ms		□
Number of starts before inhibition		0 to 60			
Start inhibit time		0 to 360 min	±1 min		
Apparent impedance Zd, Z21, Z32, Z13		0 to 200 kΩ	±5 %		
Capacitance		0 to 30 F	±5 %		
Capacitor unbalance current		0.02 to 40 I0	±5 %		
Switchgear diagnosis assistance					
Cumulative breaking current		0 to 65535 kA²	±10 %		□ □
Number of operations		0 to 4 x 10^9	-		□ □
Operating time		20 to 100 ms	±1 ms		□ □
Charging time		1 to 20 s	±0.5 s		□ □
Number of rackouts		0 to 65535	-		□ □

■ *available on MSA141 analog output module, according to setup*
□ □ *saved in the event of auxiliary supply outage, even without battery*
□ *saved by battery in the event of auxiliary supply outage.*
(1) *Typical accuracy, see details on subsequent pages.*

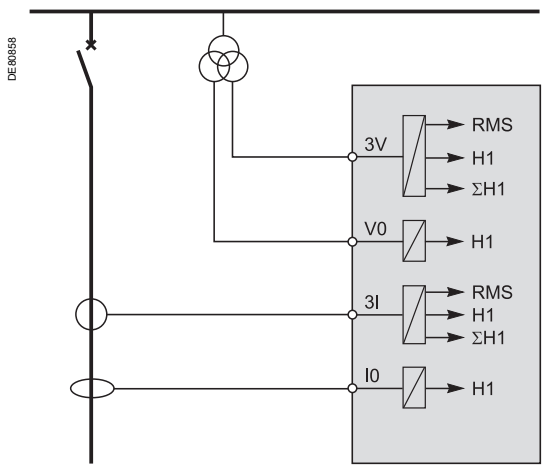

Values produced by Sepam from the signals measured.

Measured physical values

Sepam measures the following physical values:
- phase currents (3I)
- residual current (I0)
- phase voltages (3V)
- residual voltage (V0).

Each measured signal is processed by Sepam to produce all the values necessary for the metering, diagnosis and protection functions.

The charts below indicate, for the various functions, the values produced from the signals measured, with:
- RMS = RMS value up to the 13th harmonic
- H1 = fundamental 50 Hz or 60 Hz component
- ΣH1 = vector sum of the fundamental components of the three phases

Values used by the metering and diagnosis functions

		3I			I0	3V			V0
Metering		**RMS**	**H1**	**ΣH1**	**H1**	**RMS**	**H1**	**ΣH1**	**H1**
RMS phase current I1, I2, I3		■							
Calculated residual current I0Σ				■					
Demand current I1, I2, I3		■							
Peak demand current IM1, IM2, IM3		■							
Measured residual current I0					■				
Voltage U21, U32, U13, V1, V2, V3							■		
Residual voltage V0								□	□
Positive sequence voltage Vd / rotation direction							■		
Negative sequence voltage Vi							■		
Frequency f							■		
Active power P, P1, P2, P3			■				■		
Reactive power Q, Q1, Q2, Q3			■				■		
Apparent power S, S1, S2, S3			■				■		
Peak demand power PM, QM			■				■		
Power factor			■				■		
Calculated active and reactive energy (±Wh, ±VARh)			■				■		
Neutral point voltage Vnt									■
Network and machine diagnosis									
Tripping current TripI1, TripI2, TripI3			■						
Unbalance ratio / negative sequence current Ii			■						
Harmonic distortion (THD), current Ithd		■	■						
Harmonic distortion (THD), voltage Uthd						■	■		
Phase displacement φ0, φ0Σ				■	■			□	□
Phase displacement φ1, φ2, φ3			■				■		
Thermal capacity used		■							
Starting current			■						
Switchgear diagnosis	**ANSI code**								
CT / VT supervision	60/60FL		■				■		
Cumulative breaking current			■						

■ *standard*
□ *according to measurement sensors connected.*

Values used by the protection functions

		3I			I0	3V			V0
Protections	**ANSI code**	**RMS**	**H1**	**ΣH1**	**H1**	**RMS**	**H1**	**ΣH1**	**H1**
Phase overcurrent	50/51		■						
Earth fault Sensitive earth fault	50N/51N 50G/51G			□	□				
Breaker failure	50BF		■						
Negative sequence / unbalance	46		■						
Thermal overload for cables	49RMS	■							
Generic thermal overload	49RMS	■							
Thermal overload for capacitors	49RMS	■							
Thermal overload for motors	49RMS	■							
Thermal overload for transformers	49RMS	■							
Restricted earth fault	64REF			■	■				
Directional phase overcurrent	67		■				■		
Directional earth fault	67N/67NC			□	□			□	□
Directional active overpower	32P		■				■		
Directional reactive overpower	32Q		■				■		
Directional active underpower	37P		■				■		
Phase undercurrent	37		■						
Excessive starting time, locked rotor	48/51LR		■						
Starts per hour	66		■						
Field loss (underimpedance)	40		■				■		
Voltage-restrained overcurrent	50V/51V		■				■		
Underimpedance	21B		■				■		
Positive sequence undercurrent	27D						■		
Remanent undervoltage	27R						■		
Undervoltage (L-L or L-N)	27						■		
Overvoltage (L-L or L-N)	59						■		
Neutral voltage displacement	59N							□	□
Negative sequence overvoltage	47						■		
Overfrequency	81H						■		
Underfrequency	81L						■		
Rate of change of frequency	81R						■		

■ *standard*
□ *according to measurement sensors connected.*

Phase rotation direction

The rotation direction of the 3 phases of the network may be 1-2-3, or 1-3-2, the phase order in the trigonometric (counter-clockwise) direction.
The phase rotation direction needs to be set for correct calculation of the symmetrical components (Vd, Vi, V0Σ, Id, Ii, I0Σ).
The phase rotation direction directly affects:
- the direction of energy flow measured in the Sepam relay
- the sign and calculation of the powers and directional functions.

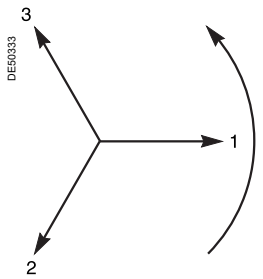

Phase rotation direction 1-2-3.

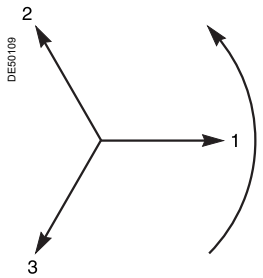

Phase rotation direction 1-3-2.

Phase current
Residual current

Phase current

Operation

This function gives the RMS value of the phase currents:
- I1: phase 1 current,
- I2: phase 2 current,
- I3: phase 3 current,

It is based on RMS current measurement and takes into account harmonics up to the 13th.
Different types of sensors may be used to meter phase current:
- 1 A or 5 A current transformers
- LPCT (Low Power Current Transducer) type current sensors.

Readout

The measurements may be accessed via:
- the Sepam display via the key
- the display of a PC with the SFT2841 software
- the communication link
- an analog converter with the MSA141 option.

Characteristics

Measurement range	0.02 to 40 In (1)
Units	A or kA
Resolution	0.1 A
Accuracy	±0.5 % typical (2) ±1 % from 0.3 to 1.5 In ±2 % from 0.1 to 0.3 In
Display format	3 significant digits
Refresh interval	1 second (typical)

(1) *In rated current set in the general settings.*
(2) *At In, under reference conditions (IEC 60255-6).*

Residual current

Operation

This operation gives the RMS value of the residual current.
It is based on measurement of the fundamental component.
2 types of residual current values are available depending on the type of Sepam and sensors connected to it:
- the residual currents I0Σ, calculated by the vector sum of the 3 phase currents
- the measured residual currents I0.

Different types of sensors may be used to measure residual current:
- CSH120, CSH200 or CSH300 specific core balance CT
- conventional 1 A or 5 A current transformer
- any core balance CT with an ACE990 interface.

Readout

The measurements may be accessed via:
- the Sepam display via the key
- the display of a PC with the SFT2841 software
- the communication link
- an analog converter with the MSA141 option.

Characteristics

Measurement range	I0Σ			0.005 to 40 In (1)
	I0 measured by CSH core balance CT	Rating	In0 = 2 A	0.005 to 20 In0 (1)
			In0 = 20 A	0.005 to 20 In0 (1)
	I0 measured by core balance CT with ACE990			0.005 to 20 In0 (1)
	I0 measured by CT			0.005 to 20 In0 (1)
Units				A or kA
Resolution				0.1 A or 1 digit
Accuracy (2)				±1 % typical at In0 ±2 % from 0.3 to 1.5 In0 ±5 % from 0.1 to 0.3 In0
Display format				3 significant digits
Refresh interval				1 second (typical)

(1) *In, In0: nominal rating set in the general settings.*
(2) *Under reference conditions (IEC 60255-6), excluding sensor accuracy.*

Demand current and peak demand currents

Operation

Demand current and peak demand currents are calculated according to the 3 phase currents I1, I2 and I3:

- demand current is calculated over an adjustable period of 5 to 60 minutes
- peak demand current is the greatest demand current and indicates the current drawn by peak loads.

Peak demand currents may be cleared. They are saved in the event of a power failure.

Readout

The measurements may be accessed via:

- the Sepam display via the key
- the display of a PC with the SFT2841 software
- the communication link.

Resetting to zero

- via the clear key on the Sepam display if a peak demand is displayed
- via the clear command in the SFT2841 software
- via the communication link (remote control order TC4).

Characteristics

Measurement range	0.02 to 40 In (1)
Units	A or kA
Resolution	0.1 A
Accuracy	±0.5 % typical (2) ±1 % from 0.3 to 1.5 In ±2 % from 0.1 to 0.3 In
Display format	3 significant digits
Integration period	5, 10, 15, 30, 60 min

(1) *In rated current set in the general settings.*
(2) *At In, under reference conditions (IEC 60255-6).*

TS/TC equivalence for each protocol

Modbus	DNP3	IEC 60870-5-103	IEC 61850
TC	**Binary Output**	**ASDU, FUN, INF**	**LN.DO.DA**
TC4	BO12	-	MSTA1.RsMaxA.ctlVal

Phase-to-phase voltage
Phase-to-neutral voltage

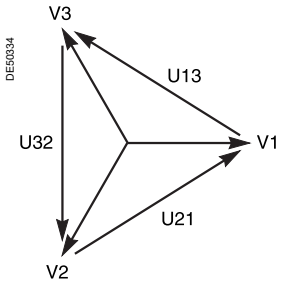

1-2-3 network: phase-to-neutral and phase-to-phase voltages.

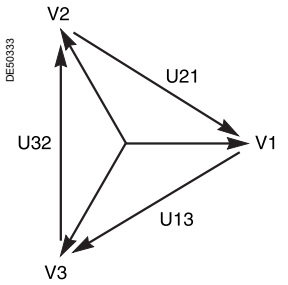

1-3-2 network: phase-to-neutral and phase-to-phase voltages.

Phase-to-phase voltage

Operation

This function gives the RMS value of the fundamental 50 Hz or 60 Hz component of the phase-to-phase voltages:

- □ ($\vec{U}21 = \vec{V}1 - \vec{V}2$), voltage between phases 2 and 1
- □ ($\vec{U}32 = \vec{V}2 - \vec{V}3$), voltage between phases 3 and 2
- □ ($\vec{U}13 = \vec{V}3 - \vec{V}1$), voltage between phases 1 and 3.

Readout

The measurements may be accessed via:
- ■ the Sepam display via the key
- ■ the display of a PC with the SFT2841 software
- ■ the communication link
- ■ an analog converter with the MSA141 option.

Characteristics

Measurement range	0.06 to 1.2 Unp (1)
Units	V or kV
Resolution	1 V
Accuracy	±0.5 % typical (2) ±1 % from 0.5 to 1.2 Unp ±2 % from 0.06 to 0.5 Unp
Display format	3 significant digits
Refresh interval	1 second (typical)

(1) *Un rated current set in the general settings.*
(2) *At Unp, under reference conditions (IEC 60255-6).*

Phase-to-neutral voltage

Operation

This function gives the RMS value of the fundamental 50 Hz or 60 Hz component of the phase-to-neutral voltages V1, V2, V3 measured on phases 1, 2 and 3.

Readout

The measurements may be accessed via:
- ■ the Sepam display via the key
- ■ the display of a PC with the SFT2841 software
- ■ the communication link
- ■ an analog converter with the MSA141 option.

Characteristics

Measurement range	0.06 to 1.2 Vnp (1)
Units	V or kV
Resolution	1 V
Accuracy	±0.5 % typical (2) ±1 % from 0.5 to 1.2 Vnp ±2 % from 0.06 to 0.5 Vnp
Display format	3 significant digits
Refresh interval	1 second (typical)

(1) *Vnp: primary rated phase-to-neutral voltage (Vnp = Unp/$\sqrt{3}$).*
(2) *At Vnp, under reference conditions (IEC 60255-6).*

Residual voltage
Neutral point voltage

Residual voltage

Operation

This function gives the value of the residual voltage :

$$\vec{V}0 = \vec{V}1 + \vec{V}2 + \vec{V}3$$

The residual voltage value may be:
- calculated by an open star/delta VT
- or calculated by taking the internal sum of the 3 phase voltages.

It is based on the measurement of the fundamental 50 Hz or 60 Hz component of the voltages.

Readout

The measurements may be accessed via:
- the Sepam display via the key
- the display of a PC with the SFT2841 software
- the communication link.

Characteristics

Measurement range	0.04 to 3 Vnp (1)
Units	V or kV
Resolution	1 V
Accuracy	±1 % from 0.5 to 3 Vnp ±2 % from 0.05 to 0.5 Vnp ±5 % from 0.04 to 0.05 Vnp
Display format	3 significant digits
Refresh interval	1 second (typical)

(1) *Vnp: primary rated phase-to-neutral voltage (Vnp = Unp/√3).*

Neutral point voltage

Operation

This function gives the value of the zero sequence voltage Vnt, measured at the neutral point of a generator or motor by a dedicated VT:

$$\vec{V}nt = (\vec{V}1 + \vec{V}2 + \vec{V}3) / 3$$

Readout

The measurements may be accessed via:
- the Sepam display via the key
- the display of a PC with the SFT2841 software
- the communication link.

Characteristics

Measurement range	0.04 Vnp to 3 Vntp (1)
Units	V or kV
Resolution	1 V
Accuracy	±1 % from 0.5 to 3 Vntp ±2 % from 0.05 to 0.5 Vntp ±5 % from 0.04 to 0.05 Vntp
Display format	3 significant digits
Refresh interval	1 second (typical)

(1) *Vntp: neutral point voltage transformer primary voltage.*

Positive sequence voltage
Negative sequence voltage

Positive sequence voltage

Operation

This function calculates the value of the positive sequence voltage Vd:
- from the 3 phase-to-neutral voltages:
  - phase rotation direction 1-2-3: $\vec{Vd} = \frac{1}{3} \times (\vec{V1} + a\vec{V2} + a^2\vec{V3})$
  - phase rotation direction 1-3-2: $\vec{Vd} = \frac{1}{3} \times (\vec{V1} + a^2\vec{V2} + a\vec{V3})$
- or from the 2 phase-to-phase voltages:
  - phase rotation direction 1-2-3: $\vec{Vd} = \frac{1}{3} \times (\vec{U21} - a^2\vec{U32})$
  - phase rotation direction 1-3-2: $\vec{Vd} = \frac{1}{3} \times (\vec{U21} - a\vec{U32})$

with $a = e^{j\frac{2\pi}{3}}$

Readout

The measurements may be accessed via:
- the Sepam display via the key
- the display of a PC with the SFT2841 software
- the communication link.

Characteristics

Measurement range	0.05 to 1.2 Vnp (1)
Units	V or kV
Resolution	1 V
Accuracy	±2 % at Vnp
Display format	3 significant digits
Refresh interval	1 second (typical)

(1) Vnp: primary rated phase-to-neutral voltage (Vnp = Unp/√3).

Negative sequence voltage

Operation

This function calculates the value of the negative sequence voltage Vi:
- from the 3 phase-to-neutral voltages:
  - phase rotation direction 1-2-3: $\vec{Vi} = \frac{1}{3} \times (\vec{V1} + a^2\vec{V2} + a\vec{V3})$
  - phase rotation direction 1-3-2: $\vec{Vi} = \frac{1}{3} \times (\vec{V1} + a\vec{V2} + a^2\vec{V3})$
- or from the 2 phase-to-phase voltages:
  - phase rotation direction 1-2-3: $\vec{Vi} = \frac{1}{3} \times (\vec{U21} - a\vec{U32})$
  - phase rotation direction 1-3-2: $\vec{Vi} = \frac{1}{3} \times (\vec{U21} - a^2\vec{U32})$

with $a = e^{j\frac{2\pi}{3}}$

Readout

The measurements may be accessed via:
- the Sepam display via the key
- the display of a PC with the SFT2841 software
- the communication link.

Characteristics

Measurement range	0.05 to 1.2 Vnp (1)
Units	V or kV
Resolution	1 V
Accuracy	±2 % at Vnp
Display format	3 significant digits
Refresh interval	1 second (typical)

(1) Vnp: primary rated phase-to-neutral voltage (Vnp = Unp/√3).

Frequency

Operation

This function gives the frequency value.
Frequency is measured via the following:
- based on U21 or V1, if only one phase-to-phase voltage is connected to the Sepam
- based on positive sequence voltage in other cases.

Frequency is not measured if:
- the voltage U21 (or V1) or positive sequence voltage Vd is less than 40 % of Un
- the frequency f is outside the measurment range.

Readout

The measurements may be accessed via:
- the Sepam display via the key
- the display of a PC with the SFT2841 software
- the communication link
- an analog converter with the MSA141 option.

Characteristics

Rated frequency	50 Hz, 60 Hz
Range	25 to 65 Hz
Resolution (1)	0.01 Hz
Accuracy (2)	±0.01 Hz
Display format	3 significant digits
Refresh interval	1 second (typical)

(1) *On SFT2841.*
(2) *At Unp, under reference conditions (IEC 60255-6).*

Active, reactive and apparent power

Operation

Power values are calculated from the phase currents I1, I2 and I3:
- active power = $\sqrt{3}$ .U.I cos φ
- reactive power = $\sqrt{3}$ .U.I.sin φ
- apparent power = $\sqrt{3}$ .U.I.

According to the sensors used, power calculations may be based on the 2 or 3 wattmeter method (see table below).
The 2 wattmeter method is only accurate when there is no residual current, but it is not applicable if the neutral is distributed.
The 3 wattmeter method gives an accurate calculation of 3-phase and phase by phase powers in all cases, regardless of whether or not the neutral is distributed.

Connection of voltage channels	Connection of current channels	P, Q, S calculation method	Power per phase P1, P2, P3 Q1, Q2, Q3 S1, S2, S3
3 V	I1, I2, I3	3 wattmeters	Available
	I1, I3	2 wattmeters	Not available
U32, U21 + V0	I1, I2, I3	3 wattmeters	Available
	I1, I3	2 wattmeters	Not available
U32, U21 without V0	I1, I2, I3 or I1, I3	2 wattmeters	Not available
U21	I1, I2, I3 or I1, I3	2 wattmeters The system voltage is considered to be balanced	Not available
V1	I1, I2, I3 or I1, I3	No calculation	P1, Q1, S1 only

Power calculation

- by 3 wattmeter method:

$$P = \vec{V1}\,\vec{I1}\cos(\vec{V1},\vec{I1}) + \vec{V2}\,\vec{I2}\cos(\vec{V2},\vec{I2}) + \vec{V3}\,\vec{I3}\cos(\vec{V3},\vec{I3})$$

$$Q = \vec{V1}\,\vec{I1}\sin(\vec{V1},\vec{I1}) + \vec{V2}\,\vec{I2}\sin(\vec{V2},\vec{I2}) + \vec{V3}\,\vec{I3}\sin(\vec{V3},\vec{I3})$$

- by 2 wattmeter method:

$$P = \vec{U21}\,\vec{I1}\cos(\vec{U21},\vec{I1}) - \vec{U32}\,\vec{I3}\cos(\vec{U32},\vec{I3})$$

$$Q = \vec{U21}\,\vec{I1}\sin(\vec{U21},\vec{I1}) - \vec{U32}\,\vec{I3}\sin(\vec{U32},\vec{I3})$$

- $S = \sqrt{P^2 + Q^2}$.

According to standard practice, it is considered that:
- for the outgoing circuit (1):
  - ☐ power supplied by the busbars is positive
  - ☐ power supplied to the busbars is negative

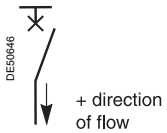

- for the incoming circuit (1):
  - ☐ power supplied to the busbars is positive
  - ☐ power supplied by the busbars is negative.

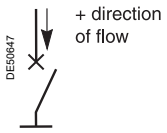

(1) *Choice to be set in the general settings.*

Active, reactive and apparent power

Readout

The measurements may be accessed via:
- the Sepam display via the key
- the display of a PC with the SFT2841 software
- the communication link
- an analog converter with the MSA141 option.

Characteristics

	Active power P, P1, P2, P3	**Reactive power Q, Q1, Q2, Q3**	**Apparent power S, S1, S2, S3**
Measurement range	±(1.5 % Sn at 999 MW) (1)	±(1.5 % Sn at 999 Mvar) (1)	1.5 % Sn at 999 MVA (1)
Units	kW, MW	kvar, Mvar	kVA, MVA
Resolution	0.1 kW	0.1 kvar	0.1 kVA
Accuracy	±1 % from 0.3 to 1.5 Sn ±3 % from 0.1 to 0.3 Sn (2)	±1 % from 0.3 to 1.5 Sn ±3 % from 0.1 to 0.3 Sn (3)	±1 % from 0.3 to 1.5 Sn ±3 % from 0.1 to 0.3 Sn
Display format	3 significant digits	3 significant digits	3 significant digits
Refresh interval	1 second (typical)	1 second (typical)	1 second (typical)

(1) *Sn = $\sqrt{3}$Unp.In.*
(2) *Cos φ > 0.8 under reference conditions (IEC 60255-6).*
(3) *Cos φ < 0.6 under reference conditions (IEC 60255-6).*

Peak demand active and reactive power Power factor (cos φ)

Peak demand active and reactive power

Operation

This function gives the greatest demand active or reactive power value since the last reset.
The values are refreshed after each "integration interval", an interval that may be set from 5 to 60 min (common interval with peak demand phase currents). The values are saved in the event of a power failure.

Readout

The measurements may be accessed via:

- the Sepam display via the key
- the display of a PC with the SFT2841 software
- the communication link.

Resetting to zero

- via the clear key on the Sepam display if a peak demand is displayed
- via the clear command in the SFT2841 software
- via the communication link (remote control order TC5).

Characteristics

	Demand active power	Demand reactive power
Measurement range	±(1.5 % Sn at 999 MW) (1)	±(1.5 % Sn at 999 Mvar) (1)
Units	kW, MW	kvar, Mvar
Resolution	0.1 kW	0.1 kvar
Accuracy	±1 %, typical (2)	±1 % typical (3)
Display format	3 significant digits	3 significant digits
Integration period	5, 10, 15, 30, 60 min	5, 10, 15, 30, 60 min

(1) Sn = $\sqrt{3}$ Unp.In.
(2) At In, Unp, cos φ > 0.8 under reference conditions (IEC 60255-6).
(3) At In, Unp, cos φ < 0.6 under reference conditions (IEC 60255-6).

TS/TC equivalence for each protocol

Modbus	DNP3	IEC 60870-5-103	IEC 61850
TC	**Binary Output**	**ASDU, FUN, INF**	**LN.DO.DA**
TC5	BO14	-	MSTA1.RsMaxPwr.ctlVal

Power factor (cos φ)

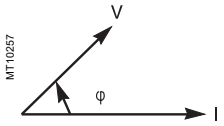

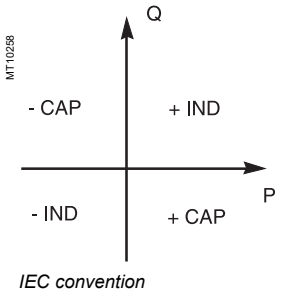

IEC convention

Operation

The power factor is defined by: $\cos\varphi = P / \sqrt{P^2 + Q^2}$.

It expresses the phase displacement between the phase currents and phase-to-neutral voltages.
The + and - signs and **IND** (inductive) and **CAP** (capacitive) indications give the direction of power flow and the type of load.

Readout

The measurements may be accessed via:

- the Sepam display via the key
- the display of a PC with the SFT2841 software
- the communication link.

Characteristics

Measurement range	-1 at 1 IND/CAP
Resolution	0.01
Accuracy (1)	0.01 typical
Display format	3 significant digits
Refresh interval	1 second (typical)

(1) At In, Unp, cos φ > 0.8 under reference conditions (IEC 60255-6).

Accumulated active and reactive energy

Operation

This function gives the following for the active and reactive energy values, calculated according to voltages and phase currents I1, I2 and I3:

- accumulated energy conveyed in one direction
- accumulated energy conveyed in the other direction.

It is based on measurement of the fundamental component.
The accumulated energy values are saved in the event of a power failure.

Readout

The measurements may be accessed via:

- the Sepam display via the key
- the display of a PC with the SFT2841 software
- the communication link.

Characteristics

	Active energy	Reactive energy
Metering capacity	0 to 2.1 10^8 MW.h	0 to 2.1 10^8 Mvar.h
Units	MW.h	Mvar.h
Resolution	0.1 MW.h	0.1 Mvar.h
Accuracy	±1 % typical (1)	±1 % typical (1)
Display format	10 significant digits	10 significant digits

(1) *At In, Unp, cos φ > 0.8 under reference conditions (IEC 60255-6).*

Accumulated active and reactive energy by pulse metering

Operation

This function is used for energy metering via logic inputs. Energy incrementing is associated with each input (one of the general parameters to be set). Each input pulse increments the meter. 4 inputs and 4 accumulated energy metering options are available:

- positive and negative active energy
- positive and negative reactive energy.

The accumulated active and reactive energy values are saved in the event of a power failure.

Readout

- the display of a PC with the SFT2841 software
- the communication link.

Characteristics

	Active energy	Reactive energy
Metering capacity	0 to 2.1 10^8 MW.h	0 to 2.1 10^8 Mvar.h
Units	MW.h	Mvar.h
Resolution	0.1 MW.h	0.1 Mvar.h
Display format	10 significant digits	10 significant digits
Increment	0.1 kW.h to 5 MW	0.1 kvar.h to 5 Mvar.h
Pulse	15 ms min.	15 ms min.

Temperature

Operation

This function gives the temperature value measured by resistance temperature detectors (RTDs):

- platinum Pt100 (100 Ω at 0 °C or 32 °F) in accordance with the IEC 60751 and DIN 43760 standards
- nickel 100 Ω or 120 Ω (at 0 °C or 32 °F).

Each RTD channel gives one measurement:
tx = RTD x temperature.
The function also indicates RTD faults:

- RTD disconnected (t > 205 °C or t > 401 °F)
- RTD shorted (t < -35 °C or t < -31 °F).

In the event of a fault, display of the value is inhibited.
The associated monitoring function generates a maintenance alarm.

Readout

The measurements may be accessed via:

- the Sepam display via the key, in °C or °F
- the display of a PC with the SFT2841 software
- the communication link
- an analog converter with the MSA141 option.

Characteristics

Range	-30 °C to +200 °C	-22 °F to +392 °F
Resolution	1 °C	1 °F
Accuracy	±1 °C from +20 °C to +140 °C ±2 °C from -30 °C to +20 °C ±2 °C from +140 °C to +200 °C	±1.8 °F from +68 °F to +284 °F ±3.6 °F from -22 °F to +68 °F ±3.6 °F from +284 °F to +392 °F
Refresh interval	5 seconds (typical)	

Accuracy derating according to wiring

- connection in 3-wire mode: the error Δt is proportional to the length of the connector and inversely proportional to the connector cross-section:

$$\Delta t(^{\circ}C) = 2 \times \frac{l(km)}{S(mm^2)}$$

- ±2.1 °C/km for a cross-section of 0.93 mm² (AWG 18)
- ±1 °C/km for a cross-section of 1.92 mm² (AWG 14).

Rotation speed

Operation

This function gives the rotation speed of a motor or generator rotor. It is calculated by measurement of the time between two pulses transmitted by a proximity sensor at each passage of a cam driven by the rotation of the motor or generator shaft. The number of pulses per rotation is set in the "particular characteristics" screen of the SFT2841 software. The proximity sensor is connected to logic input I104.

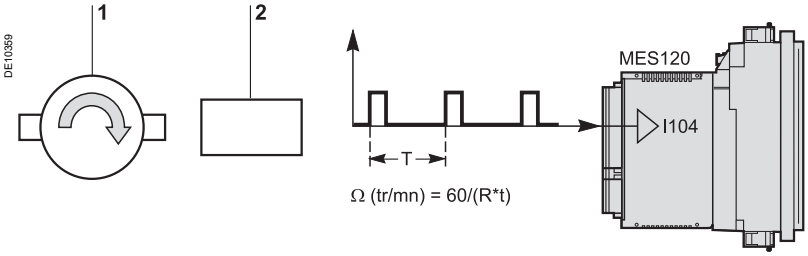

1 Rotor with 2 cams.
2 Proximity sensor.

Readout

The measurements may be accessed via:
- the display of a PC with the SFT2841 software
- the communication link.

Characteristics

Range		0 to 7200 rpm
Resolution		1 rpm
Accuracy		±1 rpm
Refresh interval		1 second (typical)
Pulses per rotation (R)		1 to 1800 with Ωn R/60 ⩽1500 (Ωn: rated speed in rpm)
Proximity sensor	Pass-band (in Hz)	> 2.Ωn R/60
	Output	24 to 250 V DC, 3 mA minimum
	Leakage current in open status	< 0.5 mA
	Voltage dip in closed status	< 4 V (with 24 V DC power supply)
	Pulse duration	0 status > 120 µs
		1 status > 200 µs

Phasor diagram

Operation

This function displays a phasor diagram of the fundamental component of the current and voltage measurements as acquired by Sepam without any correction. It provides effective assistance in the checking of cables and the implementation of directional protection functions.
It is fully parameterizable and the following choices are proposed to adapt the phasor diagram according to requirements:
- choice of measurements to be displayed in the phasor diagram
- choice of reference phasor
- choice of display mode.

Measurements to be displayed

- phase currents
- residual currents measured or with sum
- symmetrical components of current Id, Ii, I0Σ/3
- phase-to-neutral voltages
- phase-to-phase voltages
- residual voltages
- symmetrical components of voltage Vd, Vi, V0/3.

Reference phasor

The reference phasor according to which the phase shifts of the other phasors displayed are calculated may be chosen from the phase or residual current or voltage phasors. When the reference phasor is too small (< 2 % In for currents or 5 % Un for voltages), display is impossible.

Display mode

- Display as true values: the measurements are displayed without any modification in a scale chosen in relation to the respective rated values:
  - 0 to 2 Max (In) for currents
  - 0 to 2 Max (Unp) for voltages.
- Display as values normalized in relation to the maximum, i.e. the measurements are normalized in relation to the greatest measurement of the same type. The greatest measurement is displayed full scale with a modulus equal to 1, and the others are displayed as relative values compared to the modulus 1 value. This display provides maximum angular resolution, regardless of the measured values, while maintaining the relative values between measurements.
- Display as values normalized to 1: all the measurements are normalized in relation to themselves and displayed with a modulus of 1, equal to full scale. This mode provides optimal display of the angles between phasors but does not allow moduli to be compared.
- Display of phase-to-phase voltage values in a triangle arrangement: for a more common display of phase-to-phase voltage phasors.
- Display / elimination of the scale: for more convenient reading of the displayed phasors.

PE80753

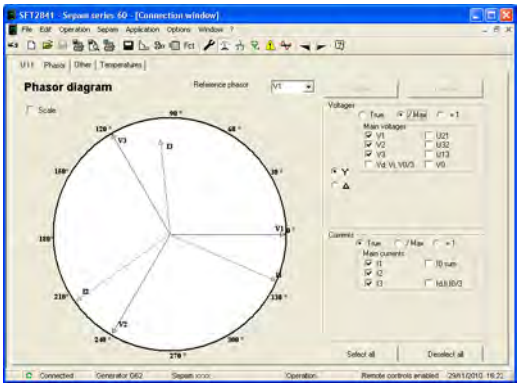

Phasor diagram on SFT2841

Characteristics

Diagram display options of an SFT2841 phasor diagram	
Measurements to be displayed	
Multiple selection from:	I1, I2, I3, I0, I0Σ, Id, Ii, I0Σ/3 V1, V2, V3, V0, U21, U32, U13, Vd, Vi, V0/3
Reference phasor	
Single choice from:	I1, I2, I3, I0, I0Σ V1, V2, V3, V0, U21, U32, U13
Display mode	
Current display	true (true value) / max (value normalized in relation to maximum) = 1 (normalized to 1)
Voltage display	true (true value) / max (value normalized in relation to maximum) = 1 (normalized to 1)
Phase-to-phase voltage	star/delta
Display of scale	yes/no

Tripping context
Tripping current

Tripping context

Operation

This function gives the values at the time of tripping (activation of the tripping contact on output O1) to enable analysis of the cause of the fault.
Values available on the Sepam display:
- tripping currents
- residual currents I0, I0Σ
- phase-to-phase voltages
- residual voltage
- neutral point voltage
- frequency
- active power
- reactive power
- apparent powe
- phase rotation direction 1-2-3/1-3-2

In addition to the values available on the Sepam display, the following values are available with the SFT2841 software:
- phase-to-neutral voltages
- negative sequence voltage
- positive sequence voltage.

The values for the last five trips are stored with the date and time of tripping.
They are saved in the event of a power failure.
Once 5 tripping contexts have been stored, the following new tripping value overwrites the oldest tripping context in the memory.

Readout

The measurements may be accessed via:
- the Sepam display via the key
- the display of a PC with the SFT2841 software
- the communication link.

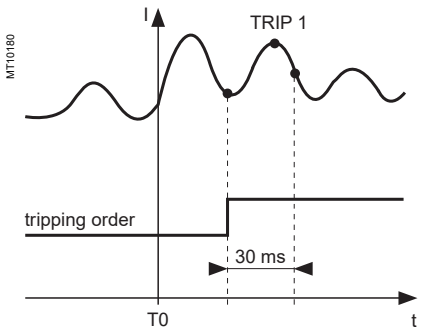

Tripping current (TRIPI1) acquisition.

Tripping current

Operation

This function gives the RMS value of currents at the prospective time of the last trip:
- TRIPI1: phase 1 current
- TRIPI2: phase 2 current
- TRIPI3: phase 3 current

It is based on measurement of the fundamental component.
This measurement is defined as the maximum RMS value measured during a 30 ms interval after the activation of the tripping contact on output O1.

Readout

The measurements may be accessed via:
- the Sepam display via the key
- the display of a PC with the SFT2841 software
- the communication link.

Characteristics

Measurement range	0.1 to 40 In (1)
Units	A or kA
Resolution	0.1 A
Accuracy	±5 % ±1 digit
Display format	3 significant digits

(1) *In, rated current set in the general settings.*

Number of phase fault trips
Number of earth fault trips

Number of phase fault trips

Operation

This function counts the network phase faults that have caused circuit breaker tripping.
It counts only trips triggered by protection functions 50/51, 50V/51V and 67, when the circuit breaker is closed.
If there is discrimination between several circuit breakers, the fault is only counted by the Sepam that issues the trip order.
Transient faults cleared by the recloser are counted.

The number of phase fault trips is saved in the event of an auxiliary power failure.
It may be reinitialized using the SFT2841 software.

Readout

The measurements may be accessed via:
- the Sepam display via the key
- the display of a PC with the SFT2841 software
- the communication link.

Characteristics

Measurement range	0 to 65535
Units	None
Resolution	1
Refresh interval	1 second (typical)

Number of earth fault trips

Operation

This function counts earth faults on the network that have caused circuit breaker tripping.
It counts only trips triggered by protection functions 50N/51N and 67N when the circuit breaker is closed.
If there is discrimination between several circuit breakers, the fault is only counted by the Sepam that issues the trip order.
Transient faults cleared by the recloser are counted.

The number of earth fault trips is saved in the event of an auxiliary power failure.
It may be reinitialized using the SFT2841 software.

Readout

The measurements may be accessed via:
- the Sepam display via the key
- the display of a PC with the SFT2841 software
- the communication link.

Characteristics

Measurement range	0 to 65535
Units	None
Resolution	1
Refresh interval	1 second (typical)

Negative sequence / unbalance

Operation

This function gives the negative sequence component: **T = Ii/Ib**.
The negative sequence current is determined based on the phase currents:

■ 3 phases:

□ phase rotation direction 1-2-3: $\vec{Ii} = \frac{1}{3} \times (\vec{I1} + a^2\vec{I2} + a\vec{I3})$

□ phase rotation direction 1-3-2: $\vec{Ii} = \frac{1}{3} \times (\vec{I1} + a\vec{I2} + a^2\vec{I3})$

■ 2 phases:

□ phase rotation direction 1-2-3: $\left|\vec{Ii}\right| = \frac{1}{\sqrt{3}} \times \left|\vec{I1} - a^2\vec{I3}\right|$

□ phase rotation direction 1-3-2: $\left|\vec{Ii}\right| = \frac{1}{\sqrt{3}} \times \left|\vec{I1} - a\vec{I3}\right|$

with $a = e^{j\frac{2\pi}{3}}$

When there are no earth faults, the formulas for 2 phase currents are equivalent to those for 3 phase currents.

Readout

The measurements may be accessed via:

■ the Sepam display via the key
■ the display of a PC with the SFT2841 software
■ the communication link.

Characteristics

Measurement range	10 to 500 %
Units	% Ib
Resolution	1 %
Accuracy	±2 %
Display format	3 significant digits
Refresh interval	1 second (typical)

Current total harmonic distortion Voltage total harmonic distortion

Current total harmonic distortion

Operation

Current total harmonic distortion Ithd may be used to assess the quality of the current. It is calculated based on phase I1, taking into account harmonics up to the 13th.

Ithd is calculated over 50 periods using the following formula:

$$\mathbf{Ithd = 100\ \%}\ \sqrt{\left(\frac{\mathbf{RMS}}{\mathbf{H1}}\right)^2 - 1}$$

with:
RMS = RMS value of current I1 up to the 13th harmonic
H1 = value of the fundamental of current I1

Readout

The measurements may be accessed via:
- the Sepam display via the key
- the display of a PC with the SFT2841 software
- the communication link.

Characteristics

Measurement range	0 to 100 %
Units	%
Resolution	0.1 %
Display format	3 significant digits
Refresh interval	1 second (typical)

Voltage total harmonic distortion

Operation

Voltage total harmonic distortion Uthd may be used to assess the quality of the voltage. It is calculated based on the measurement of U21 or V1 according to the configuration, taking into account harmonics up to the 9th.

Uthd is calculated over 50 periods using the following formula:

$$\mathbf{Uthd = 100\ \%}\ \sqrt{\left(\frac{\mathbf{RMS}}{\mathbf{H1}}\right)^2 - 1}$$

with:
RMS = RMS value of voltage U21 or V1 up to the 9th harmonic
H1 = value of the fundamental of voltage U21 or V1

Readout

The measurements may be accessed via:
- the Sepam display via the key
- the display of a PC with the SFT2841 software
- the communication link.

Characteristics

Measurement range	0 to 100 %
Units	%
Resolution	0.1 %
Display format	3 significant digits
Refresh interval	1 second (typical)

Phase displacement φ0, φ0Σ
Phase displacement φ1, φ2, φ3

Phase displacement φ0, φ0Σ

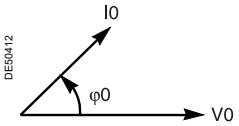

Phase displacement φo.

Operation

This function gives the phase displacement measured between the residual voltage and residual current in the trigonometric (counter-clockwise) direction (see diagram).
The measurement is useful during commissioning to check that the directional earth fault protection unit is connected correctly.
Three values are available:

- φ0, angle between V0 and measured I0
- φ0Σ, angle between V0 and I0Σ calculated as the sum of the phase currents.

Readout

The measurements may be accessed via:

- the Sepam display via the key
- the display of a PC with the SFT2841 software
- the communication link.

Characteristics

Measurement range	0 to 359°
Resolution	1°
Accuracy	±2°
Refresh interval	2 seconds (typical)

Phase displacement φ1, φ2, φ3

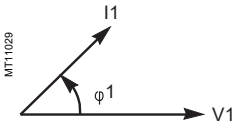

Phase displacement φ1.

Operation

This function gives the phase displacement between the V1, V2, V3 voltages and I1, I2, I3 currents respectively, in the trigonometric (counter-clockwise) direction (see diagram).
The measurements are used when Sepam is commissioned to check that the voltage and current inputs are wired correctly. When the phase-to-phase voltages U21 and U32 are connected to Sepam and there is no measurement of residual voltage V0, the residual voltage is presumed to be zero. The function does not operate when only the voltage U21 or V1 is connected to Sepam.
This function takes into account the convention regarding the direction of flow of energy in the outgoing and incoming circuits (see "Power measurements"). Therefore, the angles φ1, φ2 and φ3 are adjusted by 180° with respect to the values acquired by Sepam for the incoming circuits.

Readout

The measurements may be accessed via:

- the Sepam display via the key
- the display of a PC with the SFT2841 software
- the communication link.

Characteristics

Measurement range	0 to 359°
Resolution	1°
Accuracy	±2°
Refresh interval	2 seconds (typical)

Disturbance recording

Operation

This function is used to record analog signals and logical states.
The storage of recordings is activated by one or more events set using the SFT2841 software.
The stored event begins before the event and continues afterwards.
Recordings comprise the following information:
- values sampled from the different signals
- date
- characteristics of the recorded channels.

The duration and number of recordings may be set using the SFT2841 software tool.
The files are recorded in FIFO (First In First Out) type shift storage: when the maximum number of recordings is reached, the oldest recording is erased when a new recording is triggered.

Transfer

Files may be transferred locally or remotely:
- locally: using a PC which is connected to the front panel and includes the SFT2841 software tool
- remotely: using a software tool specific to the remote monitoring and control system.

Recovery

The signals are recovered from a recording by means of the software tool compatible with COMTRADE format.

Block diagram

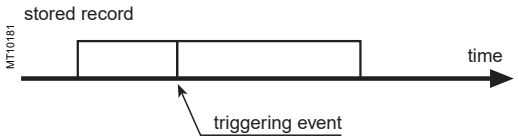

Characteristics

Recording content	Set-up file: date, channel characteristics, measuring chain transformer ratio Sample file: recorded signals
Sampling frequency (1)	12 or 36 samples per network period
Analog signals recorded (2)	I1, I2, I3, I0 current channels V1, V2, V3 or U21, U32, phase voltage channels V0 or Vnt residual voltage channels
Logical states recorded (1) (3)	Some or all of the following data is recorded: ■ all logic inputs / outputs ■ all GOOSE logic inputs G401 to G416 and G501 to G516 (if recording configured in SFT2841 software disturbance recording screen) ■ pick-up signal ■ 1 data item configurable by the logic equation editor (V_FLAGREC)
Number of recordings stored (1)	1 to 19
Total duration of a recording (1)	1 s to 20 s
Maximum recording capacity (dist. rec. memory usage = 100 %)	22 s at 50 Hz, 12 samples per period 18 s at 60 Hz, 12 samples per period 7 s at 50 Hz, 36 samples per period 6 s at 60 Hz, 36 samples per period
Periods recorded before triggering event (1)	0 to 99 periods
File format	COMTRADE - IEC60255-24 Ed 1 - 2001

(1) *To be set using the SFT2841 software.*
(2) *According to type and connection of sensors.*
(3) *According to Sepam hardware configuration.*

Data log (DLG)

■ Back up any existing files before changing the DLG function parameter settings as this will result in loss of the existing files.
■ Any change to the Sepam time affects the Data logs because the time system in which they operate will have changed.
If a Data log (in Circular or Limited mode) is in progress, the corresponding operating mode is as follows:
□ the Data log is stopped
□ the user must explicitly reset the command he has triggered before being able to trigger another one.

Operation

This function is used to record and back up a set of measurements available in the Sepam relay, in the form of a COMTRADE file. The number of backed-up files and the number of measurements per file depend on the type of cartridge installed. The recording mode and selection of measurements can be configured by the user via the SFT2841 software.
The files are saved in a FIFO memory (First In First Out): when the maximum number of files is reached, a new file replaces the oldest.
Using the DLG function does not affect the quality of service of Sepam's active protection functions.

Transfer

The files can be retrieved on a medium external to the Sepam locally or remotely:
■ Locally: using a PC connected to the programming port and running the SFT2841 software
■ Remotely: when the Sepam has the ACE850 and ACE969 communication modules (TP and FO) and a dedicated supervision system program.
Only completed files can be transferred. A remote indication data item is created at the end of recording.

Read

The files can be viewed after being transferred to a PC using software compatible with the COMTRADE format.

Operating modes

After starting up the DLG function, the measurements are captured continuously. The stop condition and file management differ according to which of the following 2 modes is used:
■ Limited (default mode): the DLG function stops automatically when the end of recording time is reached or on receipt of an external event (a logic input for example). However, the method used to stop must be the same as that used for startup. Thus, it is not possible to start a Data log using the SFT2841 software and stop it with a remote control order (TC)
■ Circular: the file content is managed in a FIFO memory: when the file is full, the write operation continues and starts again at the start of the file. Stopping the write operation only results from an external event. In the absence of the stop command, recording is continuous.

These 2 modes are exclusive: it is not possible to have a Data log configured in Limited mode simultaneously with a Data log configured in Circular mode.

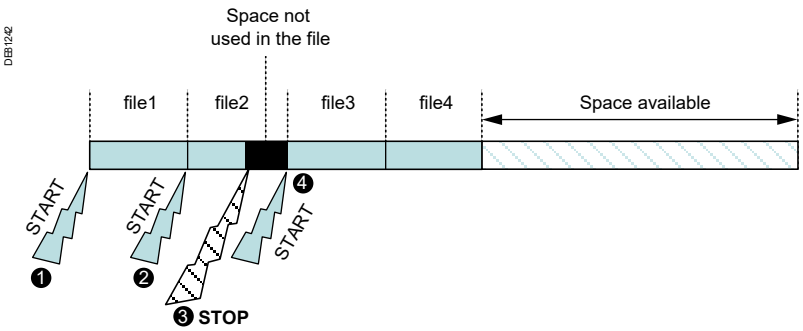

Data log in Limited mode.

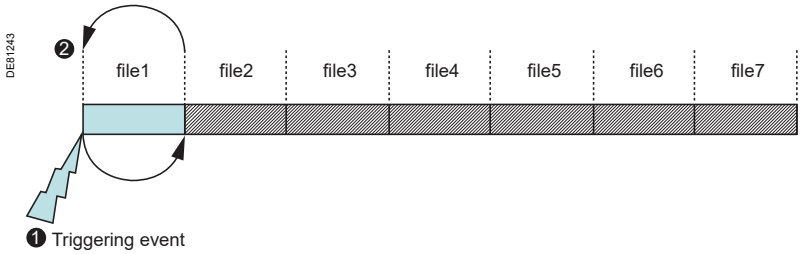

The figure below illustrates the principle of padding on a short-lived interruption and a prolonged interruption for a Data log configured in Circular mode.

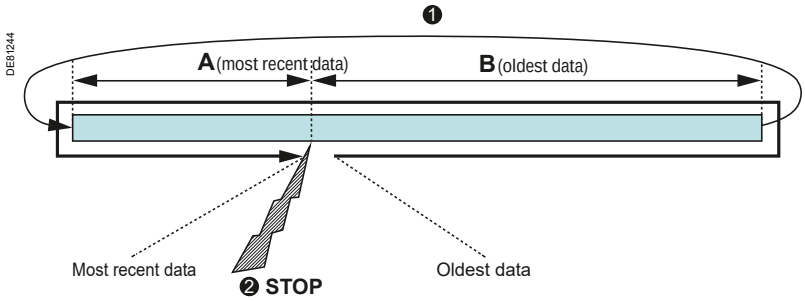

Circular mode: stopping recording

Downgraded operation

In the event of loss of the power supply during execution of the Data log function, storage is interrupted then automatically restarted when the power supply returns.
In both Limited and Circular configuration modes, on restarting the value 0x8000 is recorded in the file as a padding value for the period of non-operation.
The figure below illustrates the principle of padding on a short-lived interruption and a prolonged interruption for a Data log configured in Limited mode.
The principle of padding does not apply to a Data log configured in Limited mode and deliberately stopped by the user prior to completion.

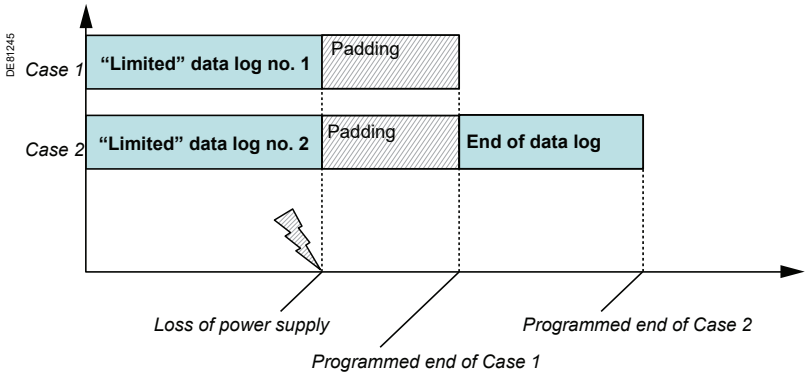

Limited mode: padding after interruption of the recording.

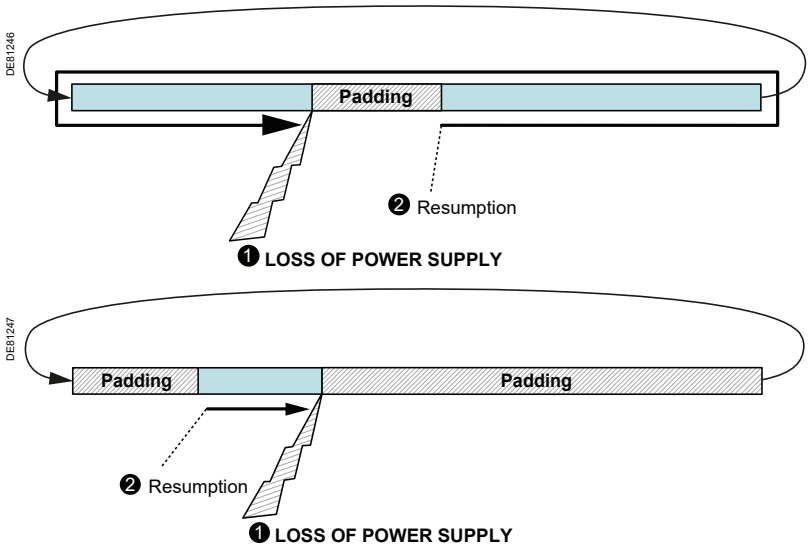

Circular mode: padding after interruption of the recording.

Characteristics

Configuration parameters	
Content of a COMTRADE file	Configuration file (*.CFG): date, variable characteristics, transformation ratio of the selected variable values Samples file (*.DAT): recorded variables
Total file duration	1 s to 30 days
Sampling period	1 s to 24 hours
Variables available for recording	See the table of available data below.
Number of files	1 to 20
Number of variables per file	1 to 15
Source of starting and stopping	■ SFT 2841 software ■ Logic equation ■ Remote communication ■ Logic or GOOSE input
File format	COMTRADE - IEC60255-24 Ed 1 - 2001

Nota : *These parameters are configured with the SFT2841 software.*

The following measurements, when available in the Sepam relay, can be selected using the SFT2841 software.

Available measurements	Designation	Units
Current		
Phase current (main inputs)	I1 I2 I3	A
Measured residual current	I0m	A
Calculated residual current	I0c	A
Demand current	I1ave I2ave I3ave	A
Peak demand current	I1max I2max I3max	A

Data log (DLG)

Available data	Designation	Units
Voltage		
Phase-to-neutral voltages (main inputs)	V1 V2 V3	V
Phase-to-phase voltages (main inputs)	U21 U32 U13	V
Residual voltage	V0 V'0	V
Neutral-point voltage	Vnt	V
Positive-sequence voltage	Vd	V
Negative-sequence voltage	Vi	V
Frequency	F	Hz
Energy		
Active power	P	MW
Active peak demand power	Pmax	MW
Active power per phase	P1 P2 P3	MW
Reactive power	Q	Mvar
Reactive peak demand power	Qmax	Mvar
Reactive power per phase	Q1 Q2 Q3	Mvar
Apparent power	S	MVA
Apparent power per phase	S1 S2 S3	MVA
Power factor (cos φ)	cosPhi	MVA
Active energy meter (+ and -)	Eam+ Eam-	MW.h
Calculated active energy meter (+ and -)	Eac+ Eac-	MW.h
Reactive energy meter (+ and -)	Erm+ Erm-	Mvar.h
Calculated reactive energy meter (+ and -)	Erc+ Erc-	Mvar.h
Other		
Rotor speed of rotation	meas.speed	rpm
Temperature	T1 to T16	° C /° F
Network diagnosis		
Unbalance ratio	Ii / Ib	% Ib
Current THD	Ithd	%
Voltage THD	Uthd	%
Phase displacement φ0, φ0Σ	φ0, φ0Σ	°
Phase displacement φ1, φ2, φ3	φ1, φ2, φ3	°

Data log (DLG)

Available data	Designation	Units
Assistance with maintenance		
Thermal capacity used	Ech	%
Running hours counter	Ch	hours
Positive-sequence and phase-to-earth apparent impedances	Zd Z21 Z32 Z13	Ω
Breaking current monitoring	S(kA)2	$(kA)^2$
Capacitive current unbalance	Ir'0	A

Input		
Designation	**Syntax**	**Equations**
Triggering DLG	V_DLG_START	■

Output			
Designation	**Syntax**	**Equations**	**Matrix**
Recording in progress	V_DLG_TRIGGED	■	

Synchro-check: voltage comparison and out-of-sync context

Operation

Voltage comparison

For the synchro-check function, the MCS025 module continuously measures the amplitude, frequency and phase differences between the 2 voltages to be checked, Usynch1 and Usynch2.

The measurement of the differences between the 2 voltages is useful to implement the function and identify the value that is impeding synchronization. The differences are calculated in the following order: amplitude, frequency and phase. As soon as a difference is greater than the threshold set in the synchro-check function, the following differences are not calculated.

Out-of-sync context

Out-of-sync context gives a precise indication of the cause of the failure of a synchronization request.

It is only provided when the switchgear control function with the "closing with synchro-check" option is activated.

When a synchronization request fails, the amplitude, frequency and phase differences of the Usynch1 and Usynch2 voltages measured by the MCS025 module are recorded, with the date and time, at the end of the switchgear control function "closing request time" delay.

Readout

The amplitude, frequency and phase differences and out-of-sync context may be accessed via:

- the Sepam display via the key
- the display of a PC with the SFT2841 software
- the communication link.

Characteristics

Amplitude difference	
Measurement range	0 to 120 % of Usynch1 (or Vsynch1)
Unit	% of Usynch1 (or Vsynch1)
Resolution	0.1 %
Accuracy	±2 %
Refresh interval	1 second (typical)
Frequency difference	
Measurement range	0 to 10 Hz
Unit	Hz
Resolution	0.01 Hz
Accuracy	0.05 Hz
Refresh interval	1 second (typical)
Phase difference	
Measurement range	0 to 359°
Unit	°
Resolution	1°
Accuracy	±2°
Refresh interval	1 second (typical)

Thermal capacity used Cooling time constant

Thermal capacity used

Operation

The thermal capacity used is calculated by the thermal overload protection function for cables, capacitors or machines.
The thermal capacity used is related to the load. The thermal capacity used measurement is given as a percentage of the rated thermal capacity.

Saving of thermal capacity used

The thermal capacity used is saved in the event of a Sepam power outage. The saved value is used again after the outage.

Readout

The measurements may be accessed via:
- the Sepam display via the key
- the display of a PC with the SFT2841 software
- the communication link
- an analog converter with the MSA141 option.

Resetting to zero

The thermal capacity used may be reset to zero, after entry of a password, on:
- the Sepam display via the clear key
- the display of a PC with the SFT2841 software.

Characteristics

Measurement range	0 to 800 %
Units	%
Display format	3 significant digits
Resolution	1 %
Refresh interval	1 second (typical)

Cooling time constant

Operation

The machine thermal overload protection function (49 RMS machine) uses a cooling time constant (T2) that may be entered by the user, according to the data given by the machine manufacturer or automatically learnt by Sepam.
T2 is estimated:
- after a heating/cooling sequence:
  - heating period detected by ES > 70 %
  - followed by a shutdown detected by I < 10 % of Ib
- when the machine temperature is measured by RTDs connected to MET148-2 module no. 1:
  - RTD 1, 2 or 3 assigned to motor/generator stator temperature measurement
  - RTD 1, 3 or 5 assigned to transformer temperature measurement.

After each new heating/cooling sequence is detected, a new T2 value is estimated and displayed in the related SFT2841 screen. Measurement accuracy may be improved by using RTD 8 to measure the ambient temperature.
The machine thermal overload function has 2 groups of thermal settings for cases such as natural or forced ventilation or 2-speed motors. A time constant is estimated for each group of thermal settings.

Readout

The measurements may be accessed via:
- the Sepam display via the key
- the display of a PC with the SFT2841 software
- the communication link.

Characteristics

Measurement range	5 to 600 min
Units	min
Resolution	1 min
Accuracy	±5 %
Display format	3 significant digits

Operating time before tripping
Waiting time after tripping

Remaining operating time before overload tripping

Operation

The thermal capacity used is calculated by the thermal overload protection function for cables, capacitors or machines. The time depends on the thermal capacity used.

Readout

The measurements may be accessed via:
- the Sepam display via the key
- the display of a PC with the SFT2841 software
- the communication link.

Characteristics

Measurement range	0 to 999 min
Units	min
Display format	3 significant digits
Resolution	1 min
Refresh interval	1 second (typical)

Waiting time before authorization of overload closing

Operation

This period corresponds to the time it takes the motor to have cooled down enough to allow restarting without tripping again. The generic thermal overload protection offers a preventive evaluation of the waiting time while the motor is still running (version ≥ 10).

Readout

The measurements may be accessed via:
- the Sepam display via the key
- the display of a PC with the SFT2841 software
- the communication link.

Characteristics

Measurement range	0 to 999 min
Units	min
Display format	3 significant digits
Resolution	1 min
Refresh interval	1 second (typical)

Running hours and operating time counter Starting current and starting time

Running hours and operating time counter

The counter gives the running total time during which the protected device (motor, generator or transformer) has been operating, i.e. whenever a phase current is over 10% Ib.
The initial counter value may be modified using the SFT2841 software.
The counters are saved in the event of an auxiliary power failure.

Readout

The measurements may be accessed via:
- the Sepam display via the key
- the display of a PC with the SFT2841 software
- the communication link.

Characteristics

Range	0 to 65535
Units	hours

Starting current and starting time

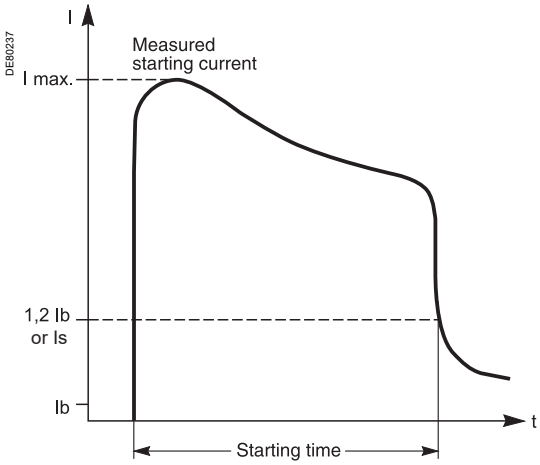

Operation

The starting time is defined as follows:
- If the locked rotor/excessive starting time protection (ANSI code 48/51LR) is active, the starting time is the time separating the moment when one of the 3 phase currents exceeds Is and the moment when the 3 currents drop back below Is, Is being the value of the current set point for protection function 48/51LR.
- If the locked rotor/excessive starting time protection (ANSI code 48/51LR) is not active, the starting time is the time separating the moment when one of the 3 phase currents exceeds 1.2 Ib and the moment when the 3 currents drop back below 1.2 Ib.

The maximum phase current obtained during this time corresponds to the starting current.
Both values are saved in the event of an auxiliary power failure.

Readout

The measurements may be accessed via:
- the Sepam display via the key
- the display of a PC with the SFT2841 software
- the communication link.

Characteristics

Starting time		
Measurement range		0 to 300 s
Units		s or ms
Display format		3 significant digits
Resolution		10 ms or 1 digit
Refresh interval		1 second (typical)
Starting current		
Measurement range	48/51LR active	Is to 24 In (1)
	48/51LR inactive	1.2 Ib to 24 In (1)
Units		A or kA
Display format		3 significant digits
Resolution		0.1 A or 1 digit
Refresh interval		1 second (typical)

(1) *Or 65.5 kA.*

Number of starts before inhibition Start inhibit time

Number of starts before inhibition

Operation

The number of starts allowed before inhibition is calculated by the number of starts protection function (ANSI code 66).
The number of starts depends on the thermal state of the motor.

Readout

The measurement may be accessed via:
- the Sepam display via the key
- the display of a PC with the SFT2841 software
- the communication link.

Resetting to zero

The number of starts counters may be reset to zero, after entry of a password, on:
- the Sepam display via the clear key
- the display of a PC with the SFT2841 software.

Characteristics

Measurement range	0 to 60
Units	None
Display format	3 significant digits
Resolution	1
Refresh interval	1 second (typical)

Start inhibit time

Operation

The start inhibit time only applies to the motor application M61. It depends on both the starts per hour protection (ANSI code 66) and the machine thermal overload protection (ANSI code 49RMS) if they have been activated. This time expresses the waiting time until another start is allowed.

If at least one of these functions picks up, a "START INHIBIT" message informs the user that starting is not allowed.

Readout

The number of starts and waiting time may be accessed via:
- the Sepam display via the key
- the display of a PC with the SFT2841 software
- the communication link.

Characteristics

Measurement range	0 to 360 min
Units	min
Display format	3 significant digits
Resolution	1 min
Refresh interval	1 second (typical)

Apparent positive sequence impedance
Apparent phase-to-phase impedances

Apparent positive sequence impedance

Operation

Apparent positive sequence impedance is used to facilitate the implementation of the underimpedance field loss protection function (ANSI 40).

$$Zd = \frac{|Vd|}{|Id|}$$

Readout

The measurement may be accessed via:
- the display of a PC with the SFT2841 software
- the communication link.

Characteristics

Measurement range	0 to 200 kΩ
Units	Ω
Resolution	0.001 Ω
Accuracy (1)	±5 %
Refresh interval	1 second (typical)

(1) *At In, Un, under reference conditions (IEC 60255-6).*

Apparent phase-to-phase impedances

Operation

Apparent phase-to-phase impedances are used to facilitate the implementation of the backup underimpedance protection function (ANSI 21B). They are expressed as the ratio of phase-to-phase voltage to phase-to-phase current.

$$Z21 = \frac{|\vec{U}21|}{|\vec{I}\,21|} \text{ with } \overrightarrow{I21} = \vec{I}1 - \vec{I}2$$

$$Z32 = \frac{|\vec{U}32|}{|\vec{I}\,32|} \text{ with } \overrightarrow{I32} = \vec{I}2 - \vec{I}3$$

$$Z13 = \frac{|\vec{U}13|}{|\vec{I}\,13|} \text{ with } \overrightarrow{I13} = \vec{I}3 - \vec{I}1$$

Readout

The measurement may be accessed via:
- the display of a PC with the SFT2841 software
- the communication link.

Characteristics

Measurement range	0 to 200 kΩ
Units	Ω
Resolution	0.001 Ω
Accuracy (1)	±5 %
Refresh interval	1 second (typical)

(1) *At In, Un, under reference conditions (IEC 60255-6).*

Capacitance

Operation

This operation gives the total capacitance for each phase of the connected capacitor to allow the condition of the capacitors to be monitored.
It covers star and delta connections (parameter set in the "Particular characteristics" screen of the SFT2841 setting and operating software). For this measurement, the installation is considered a perfect capacitance, without any consideration of the resistances added by the connection of the capacitors.

- Capacitances measured for star-connected capacitors:
  - C1: total capacitance phase 1
  - C2: total capacitance phase 2
  - C3: total capacitance phase 3
- Capacitances measured for delta-connected capacitors:
  - C21: total capacitance between phases 1 and 2
  - C32: total capacitance between phases 2 and 3
  - C13: total capacitance between phases 3 and 1.

Readout

The capacitance measurements may be accessed via:

- the display of a PC with the SFT2841 software
- the communication link.

Characteristics

Measurement range	0 to 30 F
Unit	µF, mF or F
Resolution	0.1 µF
Accuracy	±5 %
Refresh interval	1 second (typical)

Accuracy

The measurement accuracy is valid if the resistance and inductance per phase of the capacitor bank connecting cable (cable between the Sepam CT and the capacitors) respect the following conditions:

- for a star-connected bank:

$$L\omega < 0.05 \times \left|\frac{1}{C\omega}\right|$$

$$R < 0.027 \times \left|\frac{1}{C\omega}\right|$$

where R is the resistance per phase in Ω
L is the inductance per phase in H
ω is the angular frequency in radians/s
C is the total capacitance per phase in F

- for a delta-connected bank:

$$L\omega < 0.017 \times \left|\frac{1}{C\omega}\right|$$

$$R < 0.009 \times \left|\frac{1}{C\omega}\right|$$

where R is the resistance per phase in Ω
L is the inductance per phase in H
ω is the angular frequency in radians/s
C is the total capacitance between phases in F

Capacitor unbalance current

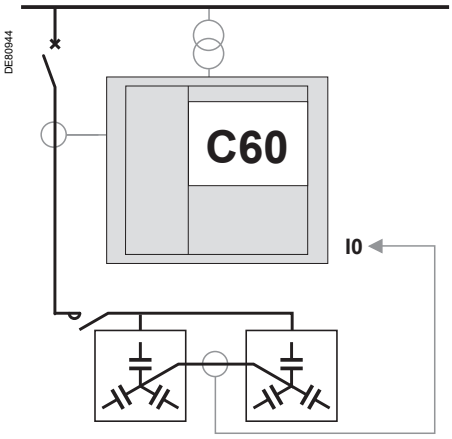

Operation

This function measures the unbalance current of double star-connected capacitors.
This type of current is characteristic of capacitor module damage.
The measurement is carried out via the residual current input I0.

Readout

The measurements may be accessed via:

- the Sepam display via the key
- the screen of a PC with the SFT2841 software
- the communication link.

Characteristics

Measurement range	0.02 to 20 I0
Unit	A
Resolution	0.1 A
Accuracy	±5 %
Refresh interval	1 second (typical)

Motor start report (MSR)

Back up any existing files before changing the MSR function parameter settings as this will result in loss of the existing files.

Operation

This Data log function, available only in motor applications, is used to view in the form of curves how some measurements change during motor starting.
The number of measurements and recording duration can be configured using the SFT2841 software.
The files are saved in a FIFO memory (First In First Out): when the maximum number of files is reached, a new file replaces the oldest.
Using the Motor start report function does not affect the quality of service of Sepam's active protection functions.

A Motor start report in progress cannot be interrupted by another motor start.
In the event of loss of the power supply or changes to parameters apart from the duration, the sampling frequency and/or the selected variables, the file currently being recorded is still saved (it is however ignored when calculating the MST), but the completed files are backed up using the battery.

Transfer

The files are transferred locally or remotely:
- Locally: using a PC connected to the programming port and running the SFT2841 software
- Remotely: using a ACE850 and ACE969 communication module (TP and FO) and a dedicated supervision system program.

Only completed files can be transferred.

Read

The files can be viewed:
- after downloading, on a PC screen, using the WaveWin software
- on the Sepam display using the key then the Diagnosis menu.

In the latter case, depending on the type of Sepam display (integrated advanced UMI or integrated mimic-based UMI), up to three graphics can be viewed. Each graphic is used to display 2 curves corresponding to the selected variables using the SFT2841 software.

1 Time tagging of the selected file and file selection zone
2 Name of the 1st variable associated with the Y-axis
3 Selection zone for the variable to be associated with the Y-axis
4 Maximum value observed for the recorded variable
5 Duration of read time

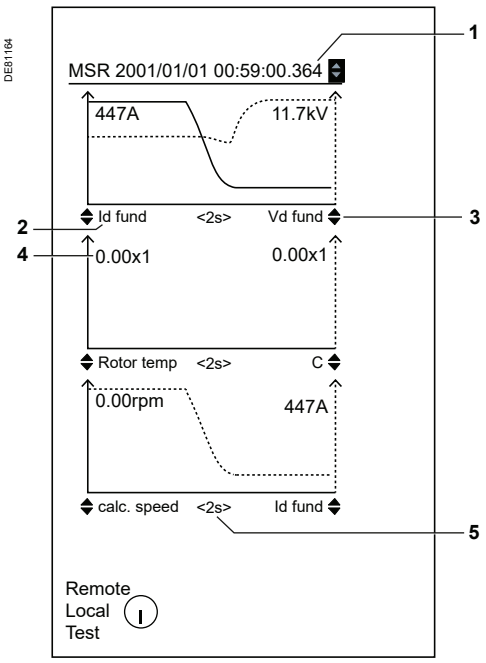

View of 3 graphics relating to 1 MSR on an integrated mimic-based UMI.

Configuring the display

1 To select the MSR file to be viewed:
Press the ↵ key as many times as necessary, with the current file selection zone active (item 1).
The file number in the series is briefly displayed before giving way to the time-tagged data.

2 To associate one of the selected variables with each Y-axis:

■ Select the axis to be configured by moving to the ◆ symbol using the ▲ (go to the previous axis) and ▼ (go to the next axis) keys.

■ Once the axis has been selected, use the ↵ key to modify the variable to be used. The screen is automatically refreshed.

Pressing the clear key can briefly hide the values appearing on the graphics. This option is only found on the integrated advanced UMI.

Note: *The curve display on Sepam should be used with caution because it does not achieve the accuracy obtained with COMTRADE file viewing software.*

Characteristics

Configuration parameters	
Content of a COMTRADE file	Configuration file (*.CFG): date, variable characteristics, transformation ratio of the selected variable values Samples file (*.DAT): recorded variables
Total file duration	2 s to 144 s
Sampling frequency	Depends on the configured duration (144 s maximum). Example: For a duration of 144 s the frequency is 1 Hz, for a duration of 2 s the frequency is 72 Hz.
Variables available for recording	See the table of available data below.
Number of files	1 to 5 with standard cartridge
Number of variables per file	1 to 5 with standard cartridge
File format	COMTRADE - IEC60255-24 Ed 1 - 2001

Note: *These parameters are configured with the SFT 2841 software.*

Available data	**Designation**	**Units**
Phase-to-phase voltages U21, U32, U13	u21_fund u32_fund u13_fund	V
I1, I2, I3	i1_fund i2_fund i3_fund	A
Temperature	T1_to_T16	° C / ° F
Rotor speed of rotation (1)	calc.speed	rpm
Rotor speed of rotation (2)	meas.speed	rpm
Rotor resistance (3)	Rr+	Ω
Rotor thermal capacity used (3)	Rotor_temp	pu
Stator resistance (4)	Rs	Ω
Stator thermal capacity used (3)	Stator_temp	pu
Motor thermal capacity used (3)	Motor_temp	pu
Positive-sequence current	Id_fund	A
Negative-sequence current	Ii_fund	A
Positive-sequence voltage	Vd_fund	V
Negative-sequence voltage	Vi_fund	V
Measured residual current	Io_fund	A
Calculated residual current	Sum_Io	A
Residual voltage	Vo_fund	V
Motor torque (3)	C	pu
Slip (1)	g	pu
Frequency (5)	F	Hz

Input		
Designation	**Syntax**	**Equations**
Triggering MSR	V_MSR_START	■
Output		
Designation	**Syntax**	**Equations Matrix**
MSR in progress	V_MSR_TRIGGED	■

(1) *The value used is that provided by the 49RMS motor thermal overload protection if this has been activated.*
(2) *The value used is that for input I104 if the 49RMS generic thermal overload protection has been activated.*
(3) *The value used is that provided by the 49RMS motor thermal overload protection if this has been activated. The value is 0 if the 49RMS generic thermal overload protection has been activated.*
(4) *The value used is that for the active 49RMS protection: motor thermal overload or generic thermal overload.*
(5) *Only available for the main voltage channels.*

2

Operation

This function, only available for motor applications, is related to the Motor start trend function. It is used to calculate and display in the form of curves the minimum, demand and maximum values for each value recorded by the Motor start report function (MSR).
These recalculated values which are stored in a file of 144 samples covering a 30-day period, can be viewed on the Sepam screen. When the current 30-day period has ended, it is automatically archived in COMTRADE format and will no longer be able to be viewed on the Sepam display (see the Read section).
The files are saved in a FIFO memory (First In First Out): when the maximum number of files is reached, a new file replaces the oldest. The number of files available is 12.
The trends are only recalculated at the end of each Motor start report.

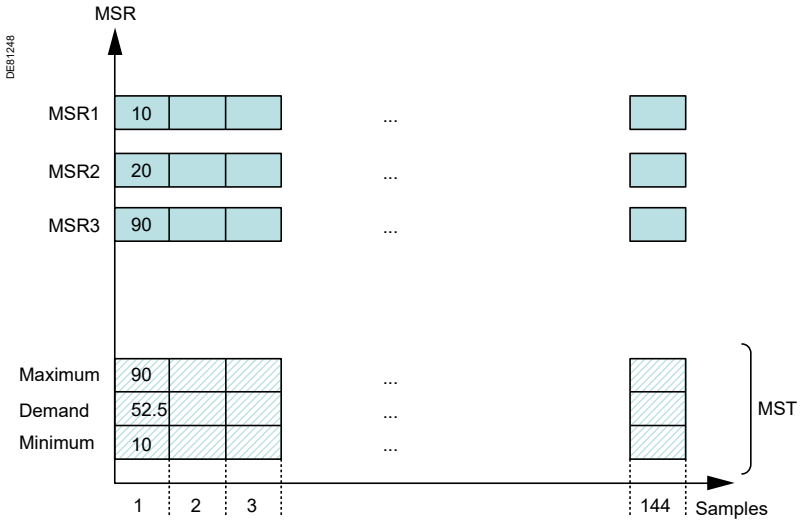

Calculating an MST using the available MSRs.

A Motor start report interrupted prior to completion is not taken into account when calculating the Motor start trend function.
Using the Motor start report function does not affect the quality of service of Sepam's active protection functions.

Comment on managing date changes:
On changing to a date prior to the start date of the current MST, this MST is not closed and any new MSR will be taken into account in its calculation.
On changing to a date after the end date of the current MST, this MST is closed and a new MST is created.

Transfer

The files are transferred locally or remotely:
- Locally: using a PC connected to the programming port and running the SFT2841 software
- Remotely: using a ACE850 and ACE969 communication module (TP and FO) and a dedicated supervision system program.

Only completed files can be transferred.

Downloading an MST file for the current period is automatically cancelled in the following cases:
- Triggering an MSR
- Triggering calculation of an MST at the end of an MSR.

Downloading an MST file for another period is automatically cancelled when this file is the oldest and needs to be replaced by a new file due to the FIFO memory being full.

Read

■ The current file and all completed files can be downloaded and viewed on a PC screen, using software compatible with the COMTRADE format.
■ Only the current file can be viewed on the Sepam display:

1 Press the key
2 Select the Diagnosis menu
3 Press the key

Depending on the type of Sepam display (integrated advanced UMI or integrated mimic-based UMI), 1 to 3 graphics can be viewed simultaneously. Each graphic can be used to restore curves representing the change in the minimum, demand and maximum values for the values recorded by the Motor start report function (MSR).

Note: *The curve display on Sepam should be used with caution because it does not achieve the accuracy obtained with COMTRADE file viewing software.*

1 Time tagging of the current file
2 Selection of the variable to be associated with the Y-axis
3 Name of the analyzed variable
4 Duration of read time for each file

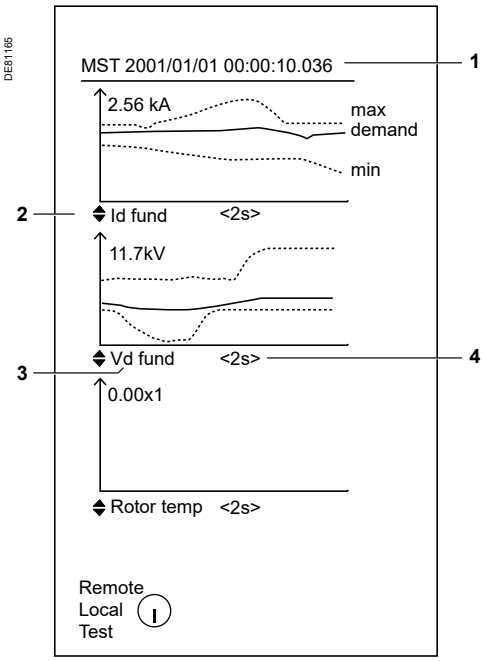

View of 3 graphics relating to an MST on an integrated mimic-based UMI.

Block diagrams

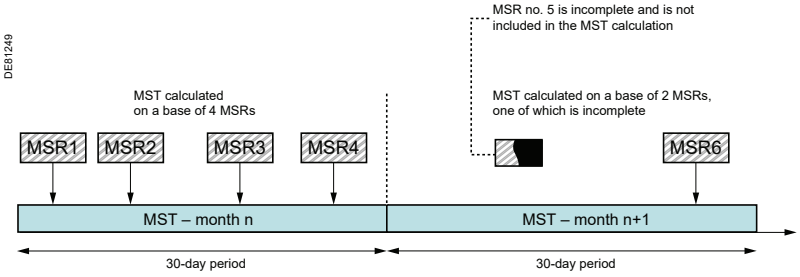

Taking account of the MSRs when calculating an MST.

The current MST file is only refreshed when recording of the MSR file is complete. The current MST file is archived 30 days after its creation. A new MST file is initiated after the 1st restart in the following period.

Motor start trend (MST)

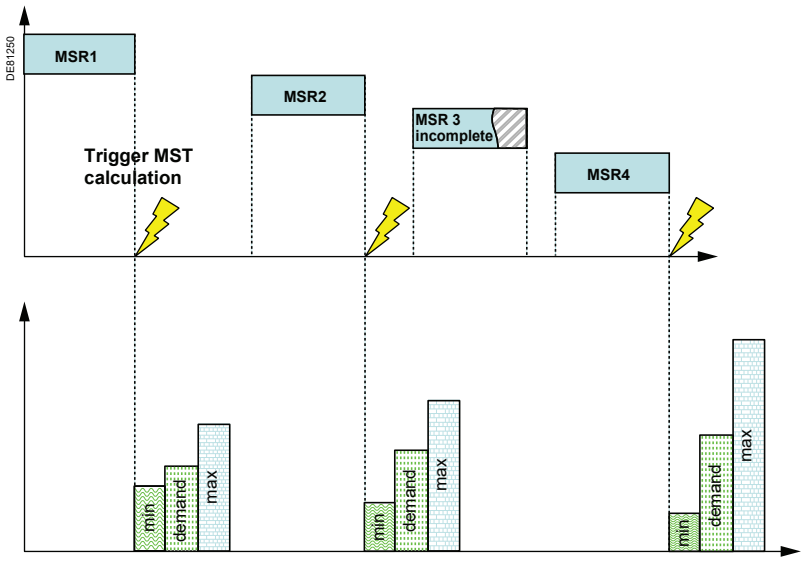

Evolution of an MST file during the operating time of the observed motor starts.

Characteristics

Content of a COMTRADE file	Configuration file (*.CFG): date, variable characteristics, transformation ratio of the selected variable values Samples file (*.DAT): recorded variables
Total file duration	30 days/144 samples
Sampling period	5 hours
Variables available for recording	See table of available data for the MST function.
Number of files	1 to 12 with standard cartridge
File format	COMTRADE - IEC60255-24 Ed 1 - 2001

Note: *These parameters are configured with the SFT 2841 software.*

VT supervision
ANSI code 60FL

Operation

The VT (Voltage Transformer) supervision function is used to supervise the complete phase and residual voltage measurement chain:
- voltage transformers
- VT connection to Sepam
- Sepam voltage analog inputs.

The function processes the following failures:
- partial loss of phase voltages, detected by:
  - presence of negative sequence voltage
  - and absence of negative sequence current
- loss of all phase voltages, detected by:
  - presence of current on one of the three phases
  - and absence of all measured voltages
- tripping of the phase VT (and/or residual VT) protection relay, detected by the acquisition on a logic input of the fuse blown contact or auxiliary contact of the circuit breaker protecting the VTs
- other types of failures may be processed using the logic equation editor.

The "Phase voltage fault" and "Residual voltage fault" information disappears automatically when the situation returns to normal, i.e. as soon as:
- the cause of the fault has disappeared
- and all of the measured voltages are present.

Use of circuit breaker closed information

The "circuit breaker closed" information is used to detect the loss of one, two or three voltages, if it is connected to a logic input.
In certain applications, the position of the circuit breaker is not sufficient to determine the presence of voltages. In such cases, the equation editor can be used to precisely define the conditions for voltage presence.

Block diagram: phase voltage fault detection.

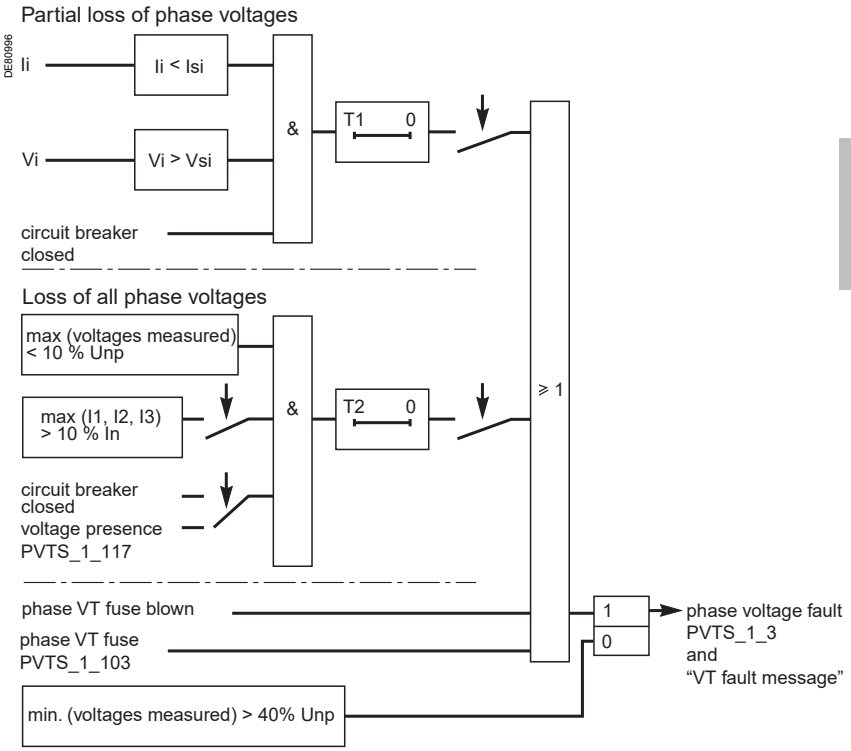

Block diagram: residual voltage fault detection.

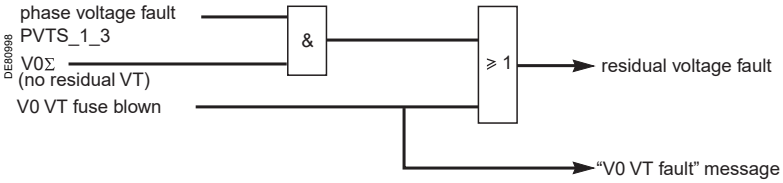

Consequences of a VT fault on protection functions

A "Phase voltage fault" affects the following protection functions:
- 21B, 27, 27D, 32P, 32Q, 37P, 40, 47, 51V
- 59, only in cases where the protection function is set up for phase-to-neutral overvoltage, when the voltages are measured by two phase VTs + V0VTs
- 67.

A "residual voltage fault" affects the following protection functions:
- 59N
- 67N/67NC.

The behavior of the protection functions in the event of a "Phase voltage fault" or Residual voltage fault" is to be set up and the following choices are proposed:
- for protection functions 21B, 27, 27D, 32P, 32Q, 37P, 40, 47, 51V, 59N, 59: inhibition or no inhibition
- for protection function 67: inhibition or non-directional operation (50/51)
- for protection function 67N/67NC: inhibition or non-directional operation (50N/ 51N).

VT supervision
ANSI code 60FL

Setting advice

The partial loss of voltages is based on the detection of the presence of negative sequence voltage and the absence of negative sequence current.
By default:
- the presence of negative sequence voltage is detected when: Vi > 10 % Vnp (Vsi)
- the absence of negative sequence current is detected when: Ii < 5 % In (Isi)
- time delay T1 is 1 s.

These default settings ensure the stability of the VT supervision function in the event of short-circuits or transient phenomena on the network.
The Isi set point may be raised for highly unbalanced networks.

Time delay T1 is to be set shorter than the voltage and power protection function tripping times.

Time delay T2 for the detection of the loss of all voltages must be longer than the time it takes for a short-circuit to be cleared by the protection function 50/51 or 67, to avoid the detection of a VT loss of voltage fault triggered by a 3-phase short-circuit.

The time delay for the 51V protection function must be longer than the T1 and T2 time delays used for the detection of voltage losses.

Characteristics

Validation of the detection of partial loss of phase voltages	
Setting	Yes / No
Vsi set point	
Setting	10 % to 100 % of Vnp
Accuracy	±5 %
Resolution	1 %
Pick-up / drop-out ratio	95 % ±2.5 %
Isi set point	
Setting	5 % to 100 % of In
Accuracy	±5 %
Resolution	1 %
Pick-up / drop-out ratio	105 % ±2.5 % or > (1 + 0.01 In/Isi) x 100 %
Time delay T1 (partial loss of phase voltages)	
Setting	0.1 s to 300 s
Accuracy	±2 % or ±25 ms
Resolution	10 ms
Validation of the detection of the loss of all phase voltages	
Setting	Yes / No
Detection of the loss of all voltages with verification of the presence of current	
Setting	Yes / No
Voltage presence detected by	
Setting	Breaker closed / Logic equation
Time delay T2 (loss of all voltages)	
Setting	0.1 s to 300 s
Accuracy	±2 % or ±25 ms
Resolution	10 ms
Voltage and power protection behavior	
Setting	No action / inhibition
Protection 67 behavior	
Setting	Non-directional / inhibition
Protection 67N/67NC behavior	
Setting	Non-directional / inhibition

Inputs

Designation	Syntax	Equations
Phase VT fault	PVTS_1_103	■
Inhibition of function	PVTS_1_113	■
Voltage presence	PVTS_1_117	■

Outputs

Designation	Syntax	Equations	Matrix
Function output	PVTS_1_3	■	■
Function inhibited	PVTS_1_16	■	

CT supervision
ANSI code 60

Operation

The CT (Current Transformer) supervision function is used to supervise the complete phase current measurement chain:
- phase current sensors (1 A/5 A CTs or LPCTs)
- phase current sensor connection to Sepam
- Sepam phase current analog inputs.

The function is inactive if only 2 phase current sensors are connected.

The "CT fault" information disappears automatically when the situation returns to normal, i.e. as soon as the 3 phase currents are measured and have values greater than 10 % of In.

In the event of the loss of a phase current, the following protection functions may be inhibited to avoid nuisance tripping:
- 21B, 46, 40, 32P, 37P, 32Q, 64REF
- 51N and 67N, if I0 is calculated by the sum of the phase currents.

Block diagram

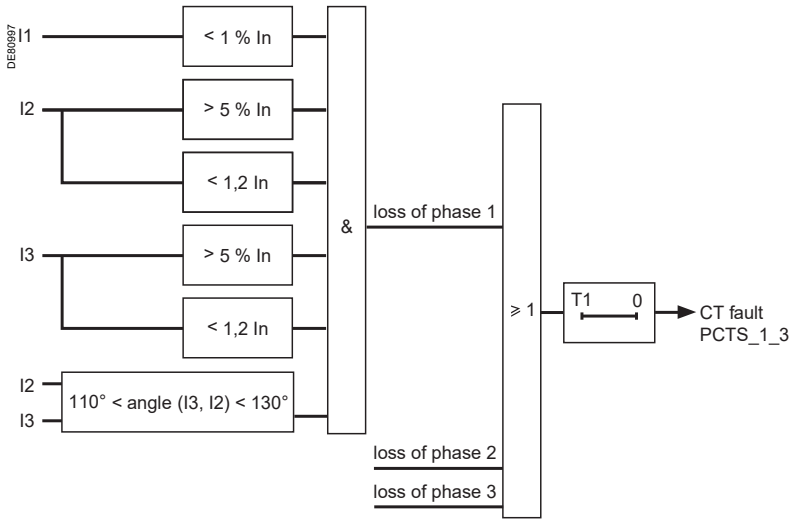

Characteristics

Time delay			
Setting	0.15 s to 300 s		
Accuracy	±2 % or ± 25 ms		
Resolution	10 ms		
Inhibition of protection functions 21B, 32P, 32Q, 37P, 40, 46, 51N, 64REF, 67N			
Setting	No action / inhibition		
Inputs			
Designation	**Syntax**	**Equations**	
Inhibition of function	PCTS_x_113	■	
Outputs			
Designation	**Syntax**	**Equations**	**Matrix**
Delayed output	PCTS_1_3	■	■
Phase 1 fault	PCTS_1_7	■	
Phase 2 fault	PCTS_1_8	■	
Phase 3 fault	PCTS_1_9	■	
Function inhibited	PCTS_1_16	■	

Trip circuit and open/closed matching supervision
ANSI code 74

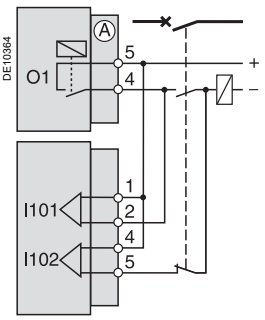

Connection for shunt trip unit supervision.

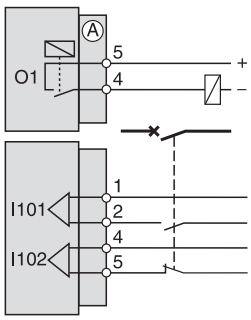

Connection for undervoltage trip unit supervision.

Operation

This supervision function is designed for trip circuits:
- ■ with shunt trip units

The function detects:
- □ circuit continuity
- □ loss of supply
- □ mismatching of position indication contacts.

The function inhibits closing of the breaking device.
- ■ with undervoltage trip units

The function detects:
- □ only mismatching of position indication contacts, trip unit supervision being unnecessary in this case.

The information is accessible in the matrix ("trip circuit" message) and via remote indication TS1.

Block diagram

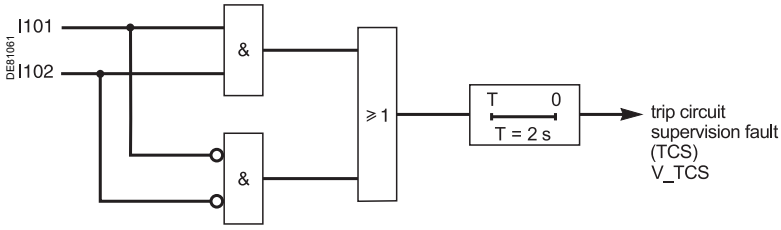

Outputs			
Designation	**Syntax**	**Equations**	**Matrix**
Trip circuit supervision fault	V_TCS		■

TS/TC equivalence for each protocol

Modbus	DNP3	IEC 60870-5-103	IEC 61850
TS	**Binary Input**	**ASDU, FUN, INF**	**LN.DO.DA**
TS1	BI17	1, 160, 36	XCBR1.EEHealth.stVal

Closing circuit and open/close orders supervision
ANSI code 74

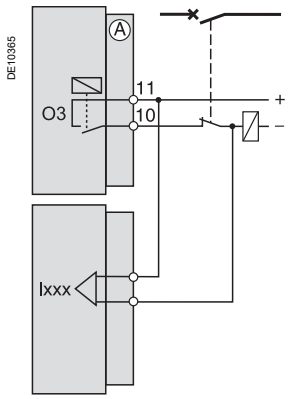

Connection for closing circuit supervision.

Closing circuit supervision

Operation

This function monitors closing coil continuity. It calls for the wiring diagram opposite, connected to a logic input configured with the "Closing coil supervision" function.
The information is accessible in the matrix ("closing circuit" message) and via remote indication TS234.

Block diagram

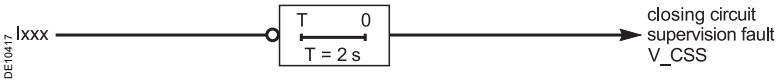

Outputs			
Designation	**Syntax**	**Equations**	**Matrix**
Closing circuit supervision fault	V_CCS		■

TS/TC equivalence for each protocol

Modbus	DNP3	IEC 60870-5-103	IEC 61850
TS	**Binary Input**	**ASDU, FUN, INF**	**LN.DO.DA**
TS234	BI121	2, 21, 23	XCBR1.EEHealth.stVal

Open/close orders supervision

Operation

Following a circuit breaker open or close order, the system checks whether, after a 200 ms time delay, the circuit breaker has actually changed status.
If the circuit breaker status does not match the last order sent, a "Control fault" message and remote indication TS2 are generated.

Outputs			
Designation	**Syntax**	**Equations**	**Matrix**
Control fault (circuit breaker monitoring)	V_CTRLFAUT		■

TS/TC equivalence for each protocol

Modbus	DNP3	IEC 60870-5-103	IEC 61850
TS	**Binary Input**	**ASDU, FUN, INF**	**LN.DO.DA**
TS2	BI16	1, 20, 5	Command Termination -

Cumulative breaking current Number of operations

Cumulative breaking current monitoring

Operation

This function gives the cumulative breaking current in $(kA)^2$ for five current ranges.
It is based on measurement of the fundamental component on current channels (I).
The current ranges displayed are:

- 0 < I < 2 In
- 2 In < I < 5 In
- 5 In < I < 10 In
- 10 In < I < 40 In
- I > 40 In.

This function gives the cumulative breaking current in $(kA)^2$ for five current ranges.This value is monitored by an adjustable set point. When the set point is overrun, an alarm is sent and is available in the matrix and via remote indication TS235.
Each value is saved in the event of an auxiliary power failure.
The initial values may be introduced using the SFT2841 software tool to take into account the real state of a breaking device used.
Refer to switchgear documentation for use of this information.

Readout

The measurements may be accessed via:

- the Sepam display via the key
- the display of a PC with the SFT2841 software
- the communication link.

Characteristics

Cumulative breaking current measured			
Range		0 to 65535 $(kA)^2$	
Units		primary $(kA)^2$	
Resolution		$1(kA)^2$	
Accuracy (1)		±10 % ±1 digit	
Alarm set point			
Setting		0 to 65535 $(kA)^2$	
Resolution		1(kA)2	
Accuracy (1)		±10 % ±1 digit	
Outputs			
Designation	**Syntax**	**Equations**	**Matrix**
Cumulative breaking current threshold overrun	V_MAXBRKCUR		■

***(1)** At In, under reference conditions (IEC 60255-6).*

TS/TC equivalence for each protocol

Modbus	DNP3	IEC 60870-5-103	IEC 61850
TS	**Binary Input**	**ASDU, FUN, INF**	**LN.DO.DA**
TS235	BI135	2, 21, 40	XCBR1.SumSwAAlm.stVal

Number of operations

Operation

The function also gives the total number of breaking device operations.
It is activated by tripping orders (O1 relay).
The number of operations is saved in the event of an auxiliary power failure.
It may be reinitialized using the SFT2841 software.

Readout

The measurements may be accessed via:

- the Sepam display via the key
- the display of a PC with the SFT2841 software
- the communication link.

Characteristics

Range	0 to 4.10^9
Units	None
Resolution	1
Refresh interval	1 second (typical)

Operating time
Charging time

Operating time

Operation

This function gives the value of the opening operating time of a breaking device **(1)** and change of status of the device open position contact connected to the I102 input **(2)**
The value is saved in the event of an auxiliary power failure.

Readout

The measurements may be accessed via:
- the Sepam display via the key
- the display of a PC with the SFT2841 software
- the communication link.

(1) *Refer to switchgear documentation for use of this information.*
(2) *Optional MES module.*

Characteristics

Measurement range	20 to 300
Units	ms
Resolution	1 ms
Accuracy	±2 ms typical
Display format	3 significant digits

Charging time

Operation

This function gives the value of the breaking device **(1)** operating mechanism charging time, determined according to the device closed position status change contact and the end of charging contact connected to the Sepam logic inputs **(2)**.
The value is saved in the event of an auxiliary power failure.

Readout

The measurements may be accessed via:
- the Sepam display via the key
- the display of a PC with the SFT2841 software
- the communication link.

(1) *Refer to switchgear documentation for use of this information.*
(2) *Optional MES module.*

Characteristics

Measurement range	1 to 20
Units	s
Resolution	1s
Accuracy	±0.5 s
Display format	3 significant digits

Number of racking out operations

Operation

This function keeps a count of circuit breaker or contactor rackouts.
The information may be used for breaking device maintenance.
The breaking device "racked out" or "disconnected" position must be wired to a logic input and set up in the SFT2841 software in order for rackouts to be counted.
The number of rackouts is saved in the event of an auxiliary power failure. It may be reinitialized using the SFT2841 software.

Readout

The measurements may be accessed via:

- the display of a PC with the SFT2841 software
- the communication link.

Characteristics

Measurement range	0 to 65535
Units	None
Resolution	1
Refresh interval	1 second (typical)

Contents

Setting ranges **74**

Overspeed **79**
ANSI code 12 79

Underspeed **80**
ANSI code 14 80

Underimpedance **81**
ANSI code 21B 81

Synchro-check **82**
ANSI code 25 82

Undervoltage (L-L or L-N) **84**
ANSI code 27 84

Positive sequence undervoltage and phase rotation direction check **85**
ANSI code 27D 85

Remanent undervoltage **86**
ANSI code 27R 86

Directional active overpower **87**
ANSI code 32P 87

Directional reactive overpower **88**
ANSI code 32Q 88

Phase undercurrent **89**
ANSI code 37 89

Directional active underpower **91**
ANSI code 37P 91

Temperature monitoring **92**
ANSI code 38/49T 92

Field loss **93**
ANSI code 40 93

Negative sequence / unbalance **96**
ANSI code 46 96

Negative sequence overvoltage **99**
ANSI code 47 99

Excessive starting time, locked rotor **100**
ANSI code 48/51LR 100

Thermal overload for cables **102**
ANSI code 49RMS 102

Thermal overload for capacitors **107**
ANSI code 49RMS 107

Thermal overload for motors **121**
ANSI code 49RMS 121

Thermal overload for machines **135**
ANSI code 49RMS 135

Breaker failure **146**
ANSI code 50BF 146

Phase overcurrent **148**
ANSI code 50/51 148

Earth fault **150**
ANSI code 50N/51N or 50G/51G 150

Voltage-restrained overcurrent **153**
ANSI code 50V/51V 153

Contents

Overvoltage (L-L or L-N) **155**
ANSI code 59 155
Neutral voltage displacement **157**
ANSI code 59N 157
Restricted earth fault differential **158**
ANSI code 64REF 158
Starts per hour **161**
ANSI code 66 161
Directional phase overcurrent **165**
ANSI code 67 165
Directional earth fault **168**
ANSI code 67N/67NC 168
Recloser **175**
ANSI code 79 175
Overfrequency **179**
ANSI code 81H 179
Underfrequency **180**
ANSI code 81L 180
Rate of change of frequency **181**
ANSI code 81R 181
General **184**
Tripping curves 184

Functions	Settings		Time delays
ANSI 12 - Overspeed			
	100 to 160 % of Ωn		1 to 300 s
ANSI 14 - Underspeed			
	10 to 100 % of Ωn		1 to 300 s
ANSI 21B - Underimpedance			
Impedance Zs	0.05 to 2.00 Vn/Ib		
ANSI 25 - Synchro-check			
Measured voltages	Phase-to-phase	Phase-to-neutral	
Rated primary phase-to-phase voltage			
Unp sync1 (Vnp sync1 = Unp sync1/$\sqrt{3}$)	220 V to 250 kV	220 V to 250 kV	
Unp sync2 (Vnp sync2 = Unp sync2/$\sqrt{3}$)	220 V to 250 kV	220 V to 250 kV	
Rated secondary phase-to-phase voltage			
Uns sync1	90 V to 120 V	90 V to 230 V	
Uns sync2	90 V to 120 V	90 V to 230 V	
Synchro-check setpoints			
dUs set point	3 % to 30 % of Unp sync1	3 % to 30 % of Vnp sync1	
dfs set point	0.05 to 0.5 Hz	0.05 to 0.5 Hz	
dPhi set point	5 to 80°	5 to 80°	
Us high set point	70 % to 110 % Unp sync1	70 % to 110 % Vnp sync1	
Us low set point	10 % to 70 % Unp sync1	10 % to 70 % Vnp sync1	
Other settings			
Lead time	0 to 0.5 s	0 to 0.5 s	
Operating modes: no-voltage conditions for which coupling is allowed	Dead1 AND Live2	Dead1 AND Live2	
	Live1 AND Dead2	Live1 AND Dead2	
	Dead1 XOR Dead2	Dead1 XOR Dead2	
	Dead1 OR Dead2	Dead1 OR Dead2	
	Dead1 AND Dead2	Dead1 AND Dead2	
ANSI 27 - Undervoltage (L-L) or (L-N)			
Tripping curve	Definite time		
	IDMT		
	Definite time with a curve that can be customized		
Set point	5 to 100 % of Unp		0.05 to 300 s
ANSI 27D - Positive sequence undervoltage			
Set point and time delay	15 to 60 % of Unp		0.05 to 300 s
ANSI 27R - Remanent undervoltage			
Set point and time delay	5 to 100 % of Unp		0.05 to 300 s
ANSI 32P - Directional active overpower			
	1 to 120 % of Sn (1)		0.1 s to 300 s
ANSI 32Q - Directional reactive overpower			
	5 to 120 % of Sn (1)		0.1 s to 300 s
ANSI 37 - Phase undercurrent			
	0.05 to 1 Ib		0.05 s to 300 s
ANSI 37P - Directional active underpower			
	5 to 100 % of Sn (1)		0.1 s to 300 s
ANSI 38/49T - Temperature monitoring			
Alarm set point TS1	0 °C to 180 °C or 32 °F to 356 °F		
Trip set point TS2	0 °C to 180 °C or 32 °F to 356 °F		
ANSI 40 - Field loss (underimpedance)			
Common point: Xa	0.02 Vn/Ib to 0.2 Vn/Ib + 187.5 kΩ		
Circle 1: Xb	0.2 Vn/Ib to 1.4 Vn/Ib + 187.5 kΩ		0.05 to 300 s
Circle 2: Xc	0.6 Vn/Ib to 3 Vn/Ib + 187.5 kΩ		0.1 to 300 s

(1) *Sn* = $\sqrt{3}$.In.Unp.

Functions	Settings		Time delays	
ANSI 46 - Negative sequence / unbalance				
Tripping curve	Definite time			
	Schneider Electric			
	IEC: SIT/A, LTI/B, VIT/B, EIT/C			
	IEEE: MI (D), VI (E), EI (F)			
	I^2 (setting constant from 1 to 100)			
Is set point	0.1 to 5 Ib	Definite time	0.1 to 300 s	
	0.1 to 0.5 Ib (Schneider Electric)	IDMT	0.1 to 1s	
	0.1 to 1 Ib (IEC, IEEE)			
	0.03 to 0.2 Ib (I^2)			
ANSI 47 - Negative sequence overvoltage				
Set point and time delay	1 to 50 % of Unp		0.05 to 300 s	
ANSI 48/51LR - Locked rotor / excessive starting time				
Is set point	0.5 Ib to 5 Ib	ST starting time	0.5 s to 300 s	
		LT and LTS time delays	0.05 s to 300 s	
ANSI 49RMS - Thermal overload for cables				
Admissible current	1 to 1.73 Ib			
Time constant T1	1 to 600 min			
ANSI 49RMS - Thermal overload for capacitors				
Alarm current		1.05 Ib to 1.70 Ib		
Trip current		1.05 Ib to 1.70 Ib		
Positioning of the hot tripping curve	Current setting	1.02 x trip current to 2 Ib		
	Time setting	1 to 2000 minutes (variable range depending on the trip current and current setting)		
ANSI 49RMS - Generic thermal overload			**Mode 1**	**Mode 2**
Accounting for negative sequence component		0 - 2.25 - 4.5 - 9		
Time constant	Heating		T1: 1 to 600 min	T1: 1 to 600 min
	Cooling		T2: 5 to 600 min	T2: 5 to 600 min
Alarm and tripping set points (Es1 and Es2)		0 to 300 % of rated thermal capacity		
Initial thermal capacity used (Es0)		0 to 100 %		
Switching of thermal settings condition		by logic input		
		by Is set point adjustable from 0.25 to 8 Ib		
Maximum equipment temperature		60 to 200 °C (140 °F to 392 °F)		
ANSI 49RMS - Motor thermal overload				
Measurement origin	I1, I2, I3			
Choice of thermal model	2 time constants/generic (see settings associated with generic thermal overload)			
Current set point - change of thermal settings		1 to 10 pu of Ib (± 0.1 pu of Ib)		
Characteristic times	Operating time accuracy	± 2 % or ±1 s		
Stator thermal settings				
Time constants	Motor thermal capacity used (τlong)	1 to 600 mn ± 1 mn		
	Stator thermal capacity used (τshort)	1 to 60 mn ± 0.1 mn		
	Cooling (τcool)	5 to 600 mn ± 1 mn		
Tripping current set point (K)	50 to 173 % of Ib (± 1 % of Ib)			
Alarm current set point	50 to 173 % of Ib (± 1 % of Ib)			
Thermal exchange coefficient between the stator and the motor (α)	0 to 1 (± 0.01)			
Current characterizing hot state	0.5 to 1 pu of Ib (± 0.1 pu of Ib)			
Accounting for ambient temperature	yes / no			
Maximum equipment temperature (Tmax)	70 to 250 °C (± 1 °C) or 158 to 482 °F (± 1 °F)			
Rotor thermal settings				
Locked rotor amperes (IL)	1 to 10 pu of Ib (± 0.01 pu of Ib)			
Locked rotor torque (LRT)	0.2 to 2 pu of nominal torque (+/- 0.01 pu of nominal torque)			
Locked rotor cold limit time (Tc)	1 to 300 s (± 0.1 s)			
Locked rotor hot limit time (Th)	1 to 300 s (± 0.1 s)			

Functions	Settings		Time delays
ANSI 49RMS - Transformer thermal overload			
Choice of thermal model	Dry-type transformer Immersed transformer Generic		
Measurement origin	I1, I2, I3		
Type of dry-type transformer	Natural ventilation (AN) / Forced ventilation (AF)		
Type of oil-filled transformer	Distribution ONAN / Power ONAN / ONAF / OF / OD		
Alarm set point (θ alarm)	Immersed transformer: 98 to 160 °C (± 1 °C) or 208 to 320 °F (± 1 °F)		
	Dry-type transformer: 95 to 245 °C (± 1 °C) or 203 to 473 °F (± 1 °F)		
Tripping set point (θ trip)	Immersed transformer: 98 to 160 °C (± 1 °C) or 208 to 320 °F (± 1 °F)		
	Dry-type transformer: 95 to 245 °C (± 1 °C) or 203 to 473 °F (± 1 °F)		
Time constant for dry-type transfo (τ)	1 to 600 mn ± 1 mn		
Time constant for oil-filled transfo	winding (τwdg)	1 to 600 mn ± 1 mn	
	oil (τoil)	5 to 600 mn ± 1 mn	
ANSI 50BF - Breaker failure			
Presence of current	0.2 to 2 In		
Operating time	0.05 s to 3 s		
ANSI 50/51 - Phase overcurrent			
	Tripping time delay	**Timer hold**	
Tripping curve	Definite time	DT	
	SIT, LTI, VIT, EIT, UIT (1)	DT	
	RI	DT	
	IEC: SIT/A, LTI/B, VIT/B, EIT/C	DT or IDMT	
	IEEE: MI (D), VI (E), EI (F)	DT or IDMT	
	IAC: I, VI, EI	DT or IDMT	
	Customized	DT	
Is set point	0.05 to 24 In	Definite time	Inst; 0.05 s to 300 s
	0.05 to 2.4 In	IDMT	0.1 s to 12.5 s at 10 Is
Timer hold	Definite time (DT; timer hold)		Inst; 0.05 s to 300 s
	IDMT (IDMT; reset time)		0.5 s to 20 s
Measurement origin	Main channels (I)		
Harmonic 2 restraint	5 to 50 %		
Min short-circuit current Isc	In to 999 kA		
Confirmation	None		
	By negative sequence overvoltage		
	By phase-to-phase undervoltage		

(1) *Tripping as of 1.2 Is.*

Functions	Settings		Time delays
ANSI 50N/51N or 50G/51G - Earth fault			
	Tripping time delay	**Timer hold**	
Tripping curve	Definite time	DT	
	SIT, LTI, VIT, EIT, UIT (1)	DT	
	RI	DT	
	CEI: SIT/A,LTI/B, VIT/B, EIT/C	DT or IDMT	
	IEEE: MI (D), VI (E), EI (F)	DT or IDMT	
	IAC: I, VI, EI	DT or IDMT	
	EPATR-B, EPATR-C	DT	
	Customized	DT	
Is0 set point	0.01 to 15 In0 (min. 0.1 A)	Definite time	Inst; 0.05 s to 300 s
	0.01 to 1 In0 (min. 0.1 A)	IDMT	0.1 s to 12.5 s at 10 Is0
	0.6 to 5 A	EPATR-B	0.5 to 1 s
	0.6 to 5 A	EPATR-C	0.1 to 3 s
Timer hold	Definite time (DT; timer hold)		Inst; 0.05 s to 300 s
	IDMT (IDMT; reset time)		0.5 s to 20 s
Measurement origin	I0 input or sum of phase currents I0Σ		
ANSI 50V/51V - Voltage-restrained overcurrent			
	Tripping time delay	**Timer hold**	
Tripping curve	Definite time	DT	
	SIT, LTI, VIT, EIT, UIT (1)	DT	
	RI	DT	
	IEC: SIT/A, LTI/B, VIT/B, EIT/C	DT or IDMT	
	IEEE: MI (D), VI (E), EI (F)	DT or IDMT	
	IAC: I, VI, EI	DT or IDMT	
	Customized	DT	
Is set point	0.5 to 24 In	Definite time	Inst; 0.05 s to 300 s
	0.5 to 2.4 In	IDMT	0.1 s to 12.5 s at 10 Is
Timer hold	Definite time (DT; timer hold)		Inst; 0.05 s to 300 s
	IDMT (IDMT; reset time)		0.5 s to 20 s
ANSI 59 - Overvoltage (L-L) or (L-N)			
Set point and time delay	50 to 150 % of Unp or Vnp		0.05 to 300 s
ANSI 59N - Neutral voltage displacement			
Tripping curve	Definite time		
	IDMT		
Set point	2 to 80 % of Unp	Definite time	0.05 to 300 s
	2 to 10 % of Unp	IDMT	0.1 to 100 s
ANSI 64REF - Restricted earth fault differential			
Is0 set point	0.05 to 0.8 In (In ⩾ 20 A)		
	0.1 to 0.8 In (In < 20 A)		
ANSI 66 - Starts per hour			
Permitted number of consecutive cold starts (Nc)	1 to 5	Time delay consecutive starts	1 to 90 min
Permitted number of consecutive hot starts (Nh)	1 to (Nc - 1)	Time delay stop/start	0 to 90 min

(1) *Tripping as of 1.2 Is.*

Functions		Settings		Time delays
ANSI 67 - Directional phase overcurrent				
Characteristic angle		30°, 45°, 60°		
		Tripping time delay	**Timer hold delay**	
Tripping curve		Definite time	DT	
		SIT, LTI, VIT, EIT, UIT (1)	DT	
		RI	DT	
		IEC: SIT/A, LTI/B, VIT/B, EIT/C	DT or IDMT	
		IEEE: MI (D), VI (E), EI (F)	DT or IDMT	
		IAC: I, VI, EI	DT or IDMT	
		Customized	DT	
Is set point		0.1 to 24 In	Definite time	Inst; 0.05 s to 300 s
		0.1 to 2.4 In	IDMT	0.1 s to 12.5 s at 10 Is
Timer hold		Definite time (DT; timer hold)		Inst; 0.05 s to 300 s
		IDMT (IDMT; reset time)		0.5 s to 20 s
ANSI 67N/67NC type 1 - Directional earth fault, according to I0 projection				
Characteristic angle		-45°, 0°, 15°, 30°, 45°, 60°, 90°		
Is0 set point		0.01 to 15 In0 (mini. 0,1 A)	Definite time	Inst; 0.05 s to 300 s
Vs0 set point		2 to 80 % of Unp		
Memory time		T0mem time	0; 0.05 s to 300 s	
		V0mem validity set point	0; 2 to 80 % of Unp	
ANSI 67N/67NC type 2 - Directional earth fault, according to I0 vector magnitude directionalized on a tripping half-plane				
Characteristic angle		-45°, 0°, 15°, 30°, 45°, 60°, 90°		
		Tripping time delay	**Timer hold delay**	
Tripping curve		Definite time	DT	
		SIT, LTI, VIT, EIT, UIT (1)	DT	
		RI	DT	
		IEC: SIT/A,LTI/B, VIT/B, EIT/C	DT or IDMT	
		IEEE: MI (D), VI (E), EI (F)	DT or IDMT	
		IAC: I, VI, EI	DT or IDMT	
		Customized	DT	
Is0 set point		0.01 to 15 In0 (min. 0.1 A)	Definite time	Inst; 0.05 s to 300 s
		0.01 to 1 In0 (min. 0.1 A)	IDMT	0.1 s to 12.5 s at 10 Is0
Vs0 set point		2 to 80 % of Unp		
Timer hold		Definite time (DT; timer hold)		Inst; 0.05 s to 300 s
		IDMT (IDMT; reset time)		0.5 s to 20 s
Measurement origin		I0 input or sum of phase currents I0Σ		
ANSI 67N/67NC type 3 - Directional earth fault, according to I0 vector magnitude directionalized on a tripping sector				
Tripping sector start angle		0° to 359°		
Tripping sector end angle		0° to 359°		
Is0 set point	CSH core balance CT (2 A rating)	0.1 A to 30 A	Definite time	Inst; 0.05 to 300 s
	1 A CT	0.005 to 15 In0 (min. 0.1 A)		
	Core balance CT + ACE990 (range 1)	0.01 to 15 In0 (min. 0.1 A)		
Vs0 set point		Calculated V0 (sum of 3 voltages)	2 to 80% of Unp	
		Measured V0 (external VT)	0.6 to 80% of Unp	
Measurement origin		I0 input or sum of phase currents I0Σ		
ANSI 81H - Overfrequency				
Set point and time delay		49 to 55 Hz or 59 to 65 Hz		0.1 to 300 s
Measurement origin		Main channels (U)		
ANSI 81L - Underfrequency				
Set point and time delay		40 to 51 Hz or 50 to 61 Hz		0.1 to 300 s
Measurement origin		Main channels (U)		
ANSI 81R - Rate of change of frequency				
		0.1 to 10 Hz/s		0.15 to 300 s

(1) *Tripping from 1.2 Is.*

Overspeed
ANSI code 12

Detection of excessive machine speeds to protect generators and processes.

Description

Detection of machine overspeed to detect synchronous generator racing due to loss of synchronism, or for process monitoring, for example.
The rotation speed is calculated by measuring the time between pulses transmitted by a proximity sensor at each passage of one or more cams driven by the rotation of the motor or generator shaft (see a more in-depth description in the "Metering functions" chapter).
The speed acquisition parameters must be set on the "Particular characteristics" screen of the SFT2841 software.
The "Rotor speed measurement" function must be assigned to logic input I104 for the function to work.
The protection picks up if the speed measured exceeds the speed set point.
The protection includes a definite time delay T.

Block diagram

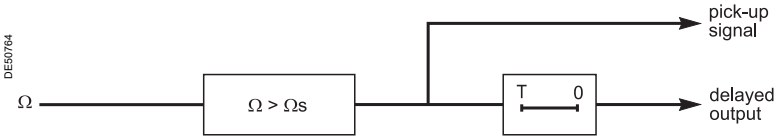

Characteristics

Settings			
Set point Ωs			
Setting range	100 to 160 % of Ωn		
Accuracy (1)	±2 %		
Resolution	1 %		
Drop out/pick up ratio	95 %		
Time delay T			
Setting range	1 s to 300 s		
Accuracy (1)	±25 ms or ±(60000/(Ωs (2) x R (3))) ms		
Resolution	1 s		
Inputs			
Designation	**Syntax**	**Equations**	
Protection reset	P12_x_101	■	
Protection inhibition	P12_x_113	■	
Outputs			
Designation	**Syntax**	**Equations**	**Matrix**
Instantaneous output (pick-up)	P12_x_1	■	
Delayed output	P12_x_3	■	■
Protection inhibited	P12_x_16	■	

x: unit number.
(1) *Under reference conditions (IEC 60255-6).*
(2) *Ωs in rpm.*
(3) *R: Number of pulses (cam) per rotation.*

Underspeed
ANSI code 14

Monitoring of underspeeds and detection of rotor locking.

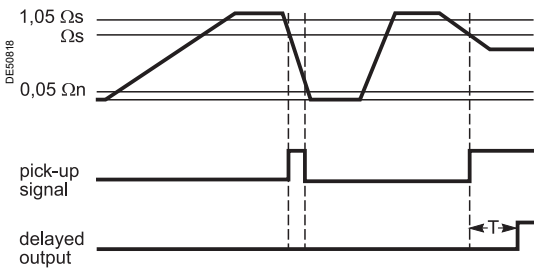

Description

Monitoring of machine speed:
- detection of machine underspeed after starting, for process monitoring, for example
- zero-speed data for detection of locked rotor.

The rotation speed is calculated by measuring the time between pulses transmitted by a proximity sensor at each passage of one or more cams driven by the rotation of the motor or generator shaft (see a more in-depth description in the "Metering functions" chapter).
The speed-acquisition and zero-speed detection parameters must be set on the "Particular characteristics" screen of the SFT2841 software.
The "Rotor speed measurement" function must be assigned to logic input I104 for the function to work.
The protection function picks up if the speed measured drops below the speed set point after having first exceeded the set point by 5 %. Zero speed is detected by unit 1 and is used by protection function 48/51 LR to detect rotor locking.
The protection includes a definite (DT) time delay T.

Block diagram

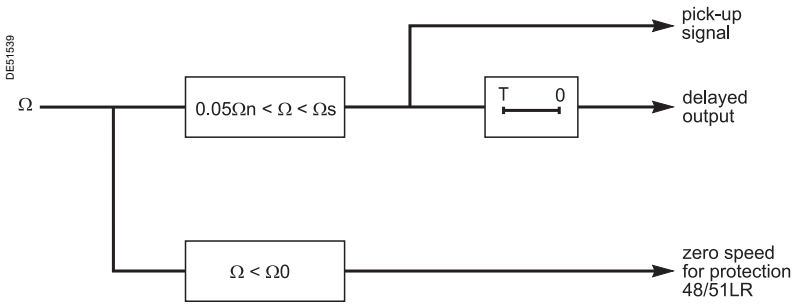

Characteristics

Settings			
Set point Ωs			
Setting range	10 to 100 % of Ωn		
Accuracy (1)	±2 %		
Resolution	1 %		
Drop out/pick up ratio	105 %		
Time delay T			
Setting range	1 s to 300 s		
Accuracy (1)	±25 ms or ±(60000/(Ωs (2) x R (3))) ms		
Resolution	1 s with T>(60/(Ωs (2) x R (3)))		
Inputs			
Designation	**Syntax**	**Equations**	
Protection reset	P14_x_101	■	
Protection inhibition	P14_x_113	■	
Outputs			
Designation	**Syntax**	**Equations**	**Matrix**
Instantaneous output (pick-up)	P14_x_1	■	
Delayed output	P14_x_3	■	■
Protection inhibited	P14_x_16	■	
Zero speed	P14_x_38	■	

x: unit number.
(1) *Under reference conditions (IEC 60255-6).*
(2) *Ωs in rpm.*
(3) *R: Number of pulses (cam) per rotation.*

Underimpedance
ANSI code 21B

Phase-to-phase short-circuit protection for generators.

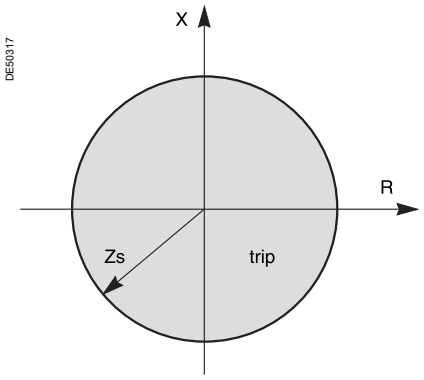

Description

The protection function is made up of a circular tripping characteristic on the impedance plane (R, X), with a definite time delay.
It picks up when one of the apparent, phase-to-phase impedances enters the circular tripping characteristic.
Apparent impedances:

$$\vec{Z}_{21} = \frac{\vec{U}_{21}}{\vec{I1} - \vec{I2}}, \vec{Z}_{32} = \frac{\vec{U}_{32}}{\vec{I2} - \vec{I3}}, \vec{Z}_{13} = \frac{\vec{U}_{13}}{\vec{I3} - \vec{I1}}.$$

Block diagram

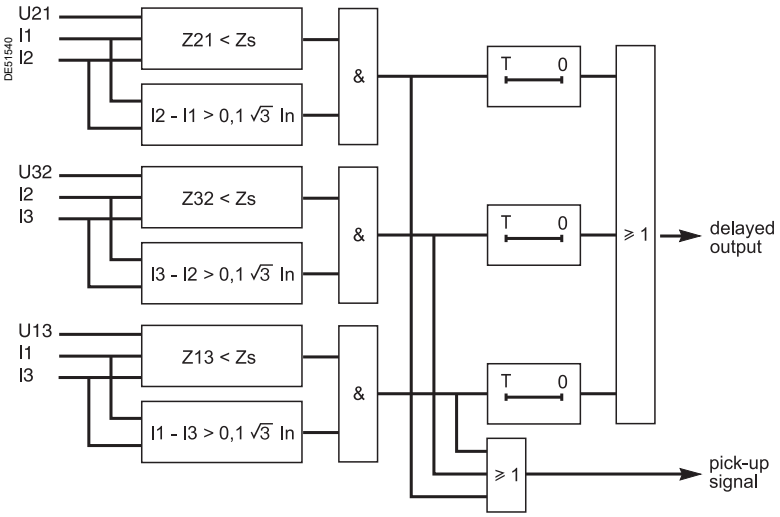

Characteristics

Settings			
Set point Ωs			
Setting range	0.05Vn/Ib ⩽ Zs ⩽ 2 Vn/Ib or 0.001 Ω		
Accuracy (1)	±2 %		
Resolution	0.001 Ω or 1 digit		
Drop out/pick up ratio	105 %		
Time delay T			
Setting range	200 ms ⩽ T ⩽ 300 s		
Accuracy (1)	±2 % or from -10 ms to +25 ms		
Resolution	10 ms or 1 digit		
Characteristic times (1)			
Operation time	pick-up < 35 ms from infinite to Zs/2 (typically 25 ms)		
Overshoot time	< 40 ms		
Reset time	< 50 ms		
Inputs			
Designation	**Syntax**	**Equations**	
Protection reset	P21B_1_101	■	
Protection inhibition	P21B_1_113	■	
Outputs			
Designation	**Syntax**	**Equations**	**Matrix**
Instantaneous output (pick-up)	P21B_1_1	■	
Delayed output	P21B_1_3	■	■
Protection inhibited	P21B_1_16	■	

(1) *Under reference conditions (IEC 60255-6).*

Example: synchronous generator

Synchronous generator data:
- S = 3.15 MVA
- Un1 = 6.3 kV
- Xd = 233 %
- X'd = 21 %

Protection setting

To set the protection function, it is necessary to calculate the rated generator impedance:
- Ib = S/(√3 Un1) = 289 A
- Zn = Un1/ (√3 Ib) = 12.59 Ω

The tripping parameter is typically set to 30 % of the rated generator impedance:
Zs = 0.30 x Zn = 3.77 Ω
This protection function is used to back up other protection functions. Its setting must therefore ensure discrimination with the other protection functions.
T = 0.9 s, for example, for a network where faults are cleared in 0.6 s.

Synchro-check
ANSI code 25

Protection function which checks the synchronization of the electrical networks upstream and downstream of a circuit breaker and allows closing when the differences in voltage, frequency and phase are within authorized limits.

Operation

The synchro-check function is designed to allow circuit breaker closing without any risk of dangerous coupling between two voltages Usync1 and Usync2. The voltages compared may be two phase-to-phase voltages or two phase-to-neutral voltages.

The function is activated when there is a phase, frequency or amplitude difference, within set limits, between the voltages that are compared.

The function is available in the optional MCS025 module. The "Close enable" logic data must be cabled to a logic input on the Sepam. All other data and measurements are transmitted to the Sepam base unit via the CCA785 connection cord.

Block diagram

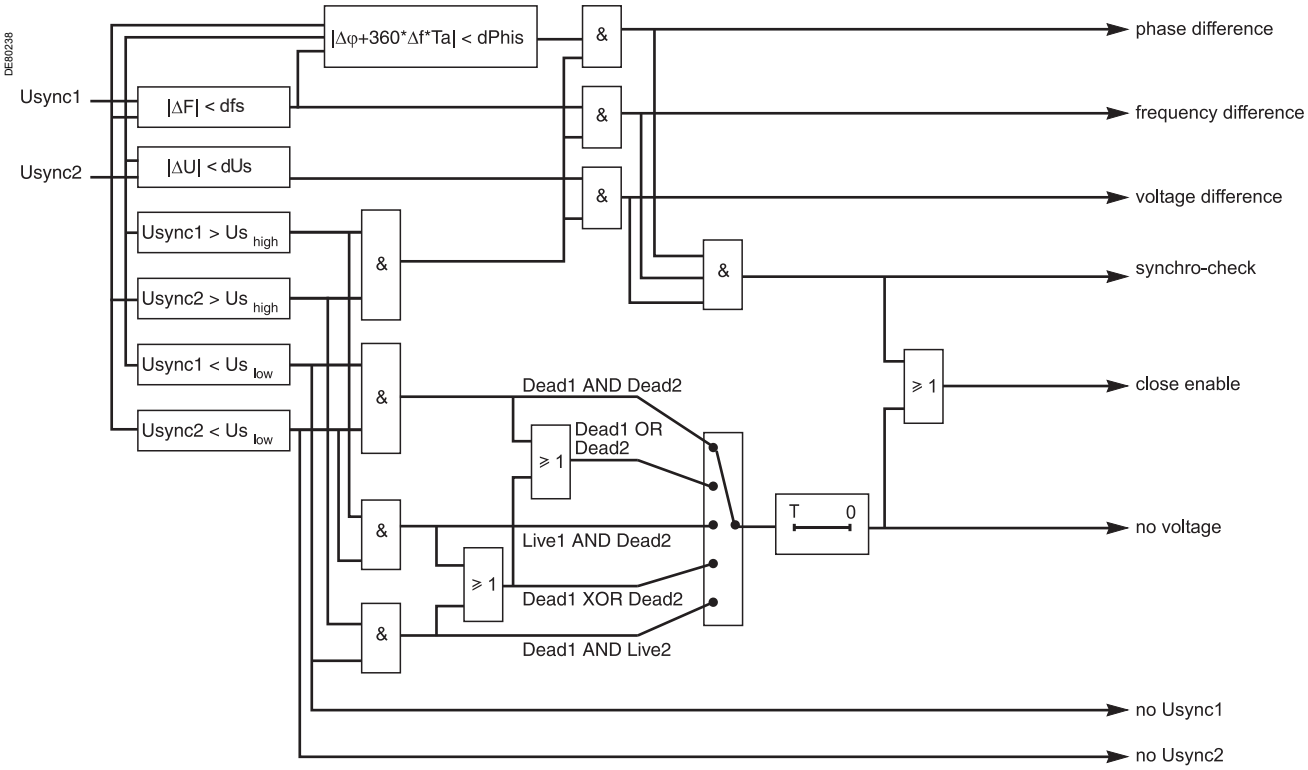

Anticipation

It is possible to anticipate the function by a time Ta, taking into account the frequency difference and the circuit breaker closing time, in order for the voltages to be synchronized at the time of coupling.

Voltage checking

When one of the two voltages is absent, coupling may be authorized according to one of five voltage checking modes.

- Usync1 absent and Usync2 present (Dead1 AND Live2)
- Usync1 present and Usync2 absent (Live1 AND Dead2)
- One voltage is present and the other is absent (Dead1 XOR Dead2)
- One or both of the two voltages are absent (Dead1 OR Dead2)
- Both voltages are absent (Dead1 AND Dead2).

The presence of each of the voltages is detected by comparing the voltage to the high set point (Us high set point). The absence of either of the voltages is detected by comparing the voltage to the low set point (Us low set point).

Synchro-check
ANSI code 25

User information

The following measurements are available:
- voltage difference
- frequency difference
- phase difference.

Characteristics

Settings			
dUs set point			
Setting range	3 % Unsync1 to 30 % Unsync1		
Accuracy (1)	±2.5 % or 0,003 Unsync1		
Resolution	1 %		
Drop out/pick up ratio	106 %		
dfs set point			
Setting range	0.05 Hz to 0.5 Hz		
Accuracy (1)	±10 mHz		
Resolution	0.01 Hz		
Drop out/pick up	< 15 mHz		
dPhis set point			
Setting range	5° to 50°		
Accuracy (1)	±2°		
Resolution	1°		
Drop out/pick up ratio	120 %		
Us high set point			
Setting range	70 % Unsync1 to 110 % Unsync1		
Accuracy (1)	±1 %		
Resolution	1 %		
Drop out/pick up ratio	93 %		
Us low set point			
Setting range	10 % Unsync1 to 70 % Unsync1		
Accuracy (1)	±1 %		
Resolution	1 %		
Drop out/pick up ratio	106 %		
Anticipation of circuit breaker closing time			
Setting range	0 to 500 ms		
Accuracy (1)	±2 % or ±25 ms		
Resolution	10 ms or 1 digit		
Voltage checking			
Setting range	On / Off		
Operating mode with no voltage			
Setting range	Dead1 AND Live2 Live1 AND Dead2 Dead1 XOR Dead2 Dead1 OR Dead2 Dead1 AND Dead2		
Characteristic times (1)			
Operation time	< 190 ms		
dU operation time	< 120 ms		
df operation time	< 190 ms		
dPhi operation time	< 190 ms		
Reset time	< 50 ms		
Outputs (1)			
Designation	**Syntax**	**Equations**	**Matrix**
Close enable			
Synchro-check	P25_1_46	■	
No voltage	P25_1_47	■	
Phase difference	P25_1_49	■	
Frequency difference	P25_1_50	■	
Voltage difference	P25_1_51	■	
No Usync1	P25_1_52	■	
No Usync2	P25_1_53	■	

(1) *Under reference conditions (IEC 60255-6).*

Undervoltage (L-L or L-N)
ANSI code 27

Protection against phase-to-neutral or phase-to-phase voltage dips.

Operation

Protection against voltage dips or detection of abnormally low voltage in order to:
- Trigger automatic load shedding
- Trigger a source transfer
- Disconnect a generator, in conformity with a "Grid code".

It includes a time delay T with:
- definite time (DT)
- inverse definite minimum time (see the tripping curve equation on page 185)
- definite time with a curve T(U/Un) that can be customized point by point.

Whether operation is phase-to-neutral or phase-to-phase voltage depends on the connection chosen for the voltage inputs.

Custom "Grid code" curve

Production installations must stay connected to the grid whenever the voltage is higher than that defined by the "Grid code" curve. The custom curve is defined point by point, with the disconnection time Tc in seconds on the X-axis and the voltage U/Un in pu on the Y-axis.

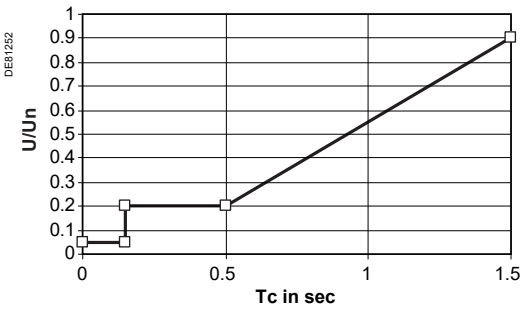

Grid code" curve.

Connection conditions			
Type of connection	V1, V2, V3 (1)	U21, U32 + V0	U21, U32
Phase-to-neutral operation	YES	YES	NO
Phase-to-phase operation	YES	YES	YES
Type of connection	U21 (1)	V1 (1)	
Phase-to-neutral operation	NO	On V1 only	
Phase-to-phase operation	On U21 only	NO	

1) With or without V0.

Block diagram

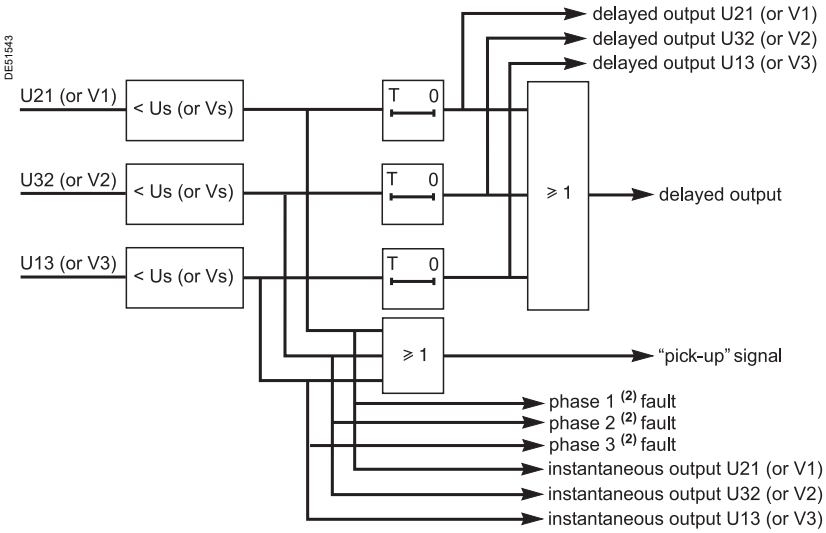

Characteristics

Settings			
Voltage mode			
Setting range	Phase-to-phase voltage / Phase-to-neutral voltage		
Tripping curve			
Setting range	Definite / IDMT / customizable		
Us (or Vs) set point			
Setting range	5 % of Unp (or Vnp) to 100 % of Unp (or Vnp)		
Accuracy (1)	±2 % or ±0.005 Unp		
Resolution	1 %		
Drop out/pick up ratio	103 % ±2 %		
Time delay T (tripping time for zero voltage)			
Setting range	50 ms to 300 s		
Accuracy (1)	±2 % or ±25 ms on the effective range [0-0.8]*Us		
Resolution	10 ms or 1 digit		
Characteristic times			
Operation time	Pick-up < 40 ms from 1.1 Us (Vs) to 0.9 Us (Vs) (typically 25 ms)		
Overshoot time	< 40 ms from 1.1 Us (Vs) to 0.9 Us (Vs)		
Reset time	< 50 ms from 0.9 Us (Vs) to 1.1 Us (Vs)		
Inputs			
Designation	**Syntax**	**Equations**	
Protection reset	P27_x_101	■	
Protection inhibition	P27_x_113	■	
Outputs			
Designation	**Syntax**	**Equations**	**Matrix**
Instantaneous output (pick-up)	P27_x_1	■	
Delayed output	P27_x_3	■	■
Fault phase 1 (2)	P27_x_7	■	
Fault phase 2 (2)	P27_x_8	■	
Fault phase 3 (2)	P27_x_9	■	
Protection inhibited	P27_x_16	■	
Instantaneous output V1 or U21	P27_x_23	■	
Instantaneous output V2 or U32	P27_x_24	■	
Instantaneous output V3 or U13	P27_x_25	■	
Delayed output V1 or U21	P27_x_26	■	
Delayed output V2 or U32	P27_x_27	■	
Delayed output V3 or U13	P27_x_28	■	

x: unit number.
***(1)** Under reference conditions (IEC 60255-6).*
***(2)**When the protection function is used for phase-to-neutral voltage.*

Positive sequence undervoltage and phase rotation direction check
ANSI code 27D

Motor protection against incorrect voltages.

Description

Protection of motors against faulty operation due to insufficient or unbalanced network voltage. It is based on measurement of the positive sequence voltage Vd. It includes a definite time delay T.
It does not operate when only a single phase-to-neutral or phase-to-phase voltage is connected.
This protection also detects the phase rotation direction. The protection function considers that the phase rotation direction is reversed when the positive sequence voltage is less than 10 % of Unp and when the phase-to-phase voltage is greater than 80 % of Unp. When this is the case, the alarm message "ROTATION –" is generated.

Block diagram

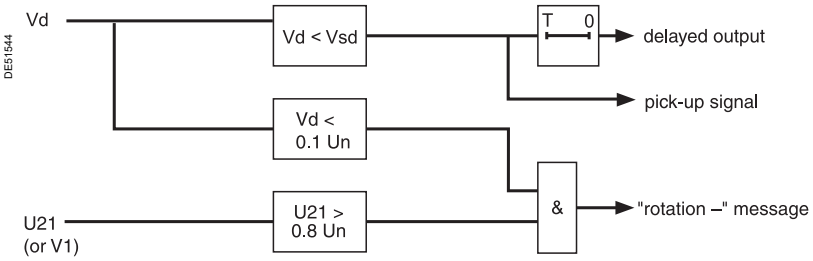

Characteristics

Settings			
Vsd set point			
Setting range	15 % Unp to 60 % Unp		
Accuracy (1)	±2 % or ±0.005 Unp		
Resolution	1 %		
Drop out/pick up ratio	103 % ±2 %		
Time delay T			
Setting range	50 ms to 300 s		
Accuracy (1)	±2 % or ±25 ms on the effective range [0-0.8]*Us		
Resolution	10 ms or 1 digit		
Characteristic times			
Operation time	Pick-up < 40 ms from1.1 Vsd to 0.9 Vsd		
Overshoot time	< 40 ms from1.1 Vsd to 0.9 Vsd		
Reset time	< 50 ms from 0.9 Vsd to 1.1 Vsd		
Inputs			
Designation	**Syntax**	**Equations**	
Protection reset	P27D_x_101	■	
Protection inhibition	P27D_x_113	■	
Outputs			
Designation	**Syntax**	**Equations**	**Matrix**
Instantaneous output (pick-up)	P27D_x_1	■	
Delayed output	P27D_x_3	■	■
Protection inhibited	P27D_x_16	■	

x: unit number.
***(1)** Under reference conditions (IEC 60255-6).*

Remanent undervoltage
ANSI code 27R

Detection of the remanent voltage sustained by rotating machines.

Description

Protection used to check that remanent voltage sustained by rotating machines has been cleared before allowing the busbars supplying the machines to be re-energized, to avoid electrical and mechanical transients.
This protection is single-phase. It picks up when the U21 or V1 voltage is less than the Us set point. The protection includes a definite time delay.

Block diagram

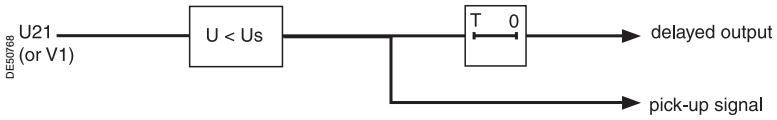

Characteristics

Settings			
Us set point			
Setting range	5 % Unp to 100 % Unp		
Accuracy (1)	±5 % or 0.005 Unp		
Resolution	1 %		
Drop out/pick up ratio	103 % ±2 %		
Time delay T			
Setting range	50 ms to 300 s		
Accuracy (1)	±2 % or ±25 ms on the effective range [0-0.8]*Us		
Resolution	10 ms or 1 digit		
Characteristic times			
Operation time	Pick-up < 45 ms from 1.1 Us to 0.9 Us		
Overshoot time	< 35 ms from 1.1 Us to 0.9 Us		
Reset time	< 35 ms from 0.9 Us to 1.1 Us		
Inputs			
Designation	**Syntax**	**Equations**	
Protection reset	P27R_x_101	■	
Protection inhibition	P27R_x_113	■	
Outputs			
Designation	**Syntax**	**Equations**	**Matrix**
Instantaneous output (pick-up)	P27R_x_1	■	
Delayed output	P27R_x_3	■	■
Protection inhibited	P27R_x_16	■	

x: unit number.
***(1)** Under reference conditions (IEC 60255-6).*

Directional active overpower
ANSI code 32P

Protection against reverse power and overloads.

Description

Two-way protection based on calculated active power, for the following applications:
- active overpower protection to detect overloads and allow load shedding
- reverse active power protection:
  - against generators running like motors when the generators draw active power
  - against motors running like generators when the motors supply active power.

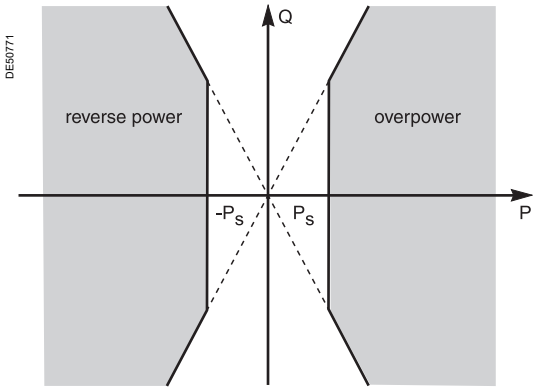

Operating zone.

The protection function picks up if the active power flowing in one direction or the other (supplied or drawn) is greater than the Ps set point.
It includes a definite time delay T.
It is based on the two or three-wattmeter method, depending on the connection conditions:
- V1, V2, V3 and I1, I2, I3: 3 wattmeters
- V1, V2, V3 and I1, I3: 2 wattmeters
- U21, U32 + V0 and I1, I2, I3: 3 wattmeters
- U21, U32 + V0 and I1, I3: 2 wattmeters
- U21, U32 without V0: 2 wattmeters
- other cases: protection function unavailable.

The function is enabled only if the following condition is met:
P ⩾ 3.1 % Q which provides a high level of sensitivity and high stability in the event of short-circuits.
The power sign is determined according to the general feeder or incomer parameter, according to the convention:
- for the feeder circuit:
  - power supplied by the busbars is positive
  - power supplied to the busbar is negative

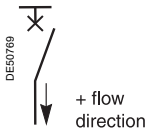

- for the incomer circuit:
  - power supplied to the busbar is positive
  - power supplied by the busbars is negative.

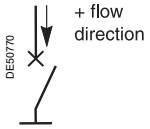

Block diagram

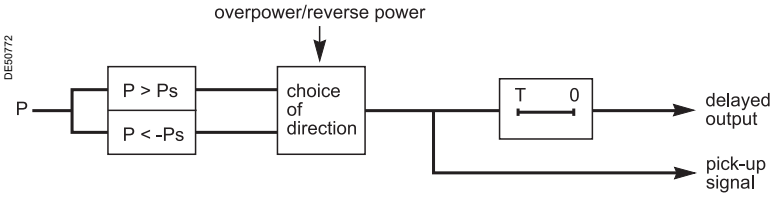

Characteristics

Settings			
Tripping direction			
Setting range	Overpower/reverse power		
Ps set point			
Setting range	1 % of Sn (2) to 120 % of Sn (2)		
Accuracy (1)	±0.3 % Sn for Ps between 1 % Sn and 5 % Sn ±5 % for Ps between 5 % Sn and 40 % Sn ±3 % for Ps between 40 % Sn and 120 % Sn		
Resolution	0.1 kW		
Drop out/pick up ratio	93.5 % ±5 % or > (1 - 0.004 Sn/Ps) x 100 %		
Time delay T			
Setting range	100 ms to 300 s		
Accuracy (1)	±2 % or -10 ms to +25 ms		
Resolution	10 ms or 1 digit		
Characteristic times			
Operation time	< 90 ms at 2 Ps		
Overshoot time	< 40 ms at 2 Ps		
Reset time	< 105 ms at 2 Ps		
Inputs			
Designation	**Syntax**	**Equations**	
Protection reset	P32P_x_101	■	
Protection inhibition	P32P_x_113	■	
Outputs			
Designation	**Syntax**	**Equations**	**Matrix**
Instantaneous output (pick-up)	P32P_x_1	■	
Delayed output	P32P_x_3	■	■
Protection inhibited	P32P_x_16	■	
Positive active power	P32P_x_19	■	
Negative active power	P32P_x_20	■	

x: unit number.
***(1)** Under reference conditions (IEC 60255-6).*
***(2)** Sn = √3 Un In.*

Directional reactive overpower
ANSI code 32Q

Protection against field loss on synchronous machines.

Description

Two-way protection based on calculated reactive power to detect field loss on synchronous machines:
- reactive overpower protection for motors which consume more reactive power following field loss
- reverse reactive overpower protection for generators which consume reactive power following field loss.

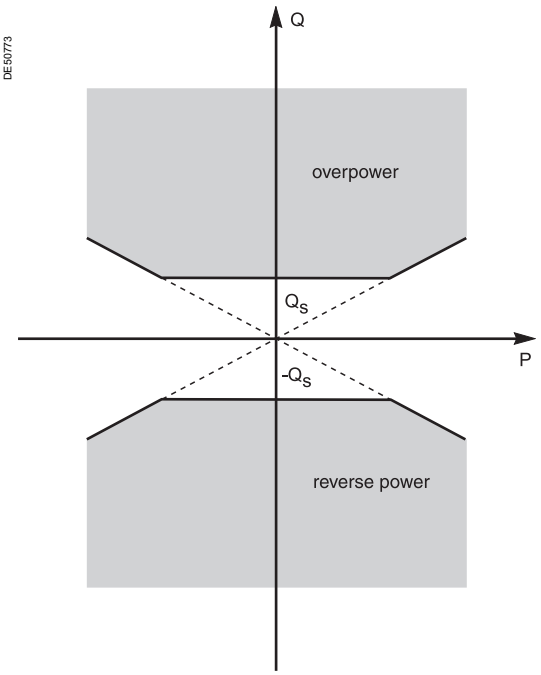

Operating zone.

The protection function picks up if the reactive power flowing in one direction or the other (supplied or drawn) is greater than the Qs set point.
It includes a definite time delay T.
It is based on the two or three-wattmeter method, depending on the connection conditions:
- V1, V2, V3 and I1, I2, I3: 3 wattmeters
- V1, V2, V3 and I1, I3: 2 wattmeters
- U21, U32 + V0 and I1, I2, I3: 3 wattmeters
- U21, U32 + V0 and I1, I3: 2 wattmeters
- U21, U32 without V0: 2 wattmeters
- other cases: protection function unavailable.

The function is enabled only if the following condition is met:
Q ⩾ 3.1 % P which provides a high level of sensitivity and high stability in the event of short-circuits.
The power sign is determined according to the general feeder or incomer parameter, according to the convention:
- for the feeder circuit:
  - power supplied by the busbars is positive
  - power supplied to the busbar is negative

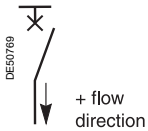

- for the incomer circuit:
  - power supplied to the busbar is positive
  - power supplied by the busbars is negative.

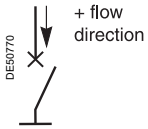

Block diagram

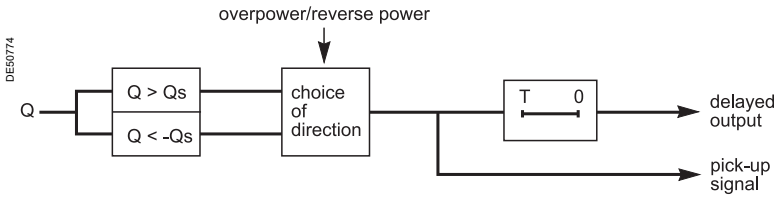

Characteristics

Settings			
Tripping direction			
Setting range	Overpower/reverse power		
Qs set point			
Setting range	5 % of Sn (2) to 120 % of Sn (2)		
Accuracy (1)	±5 % for Qs between 5 % Sn and 40 % Sn ±3 % for Qs between 40 % Sn and 120 % Sn		
Resolution	0.1 kW		
Drop out/pick up ratio	93.5 % ±5 % or > (1- 0.004 Sn/Qs) x 100 %		
Time delay T			
Setting range	100 ms to 300 s		
Accuracy (1)	±2 % or -10 ms to +25 ms		
Resolution	10 ms or 1 digit		
Characteristic times			
Operation time	< 90 ms at 2 Qs		
Overshoot time	< 95 ms at 2 Qs		
Reset time	< 95 ms at 2 Qs		
Inputs			
Designation	**Syntax**	**Equations**	
Protection reset	P32Q_1_101	■	
Protection inhibition	P32Q_1_113	■	
Outputs			
Designation	**Syntax**	**Equations**	**Matrix**
Instantaneous output (pick-up)	P32Q_1_1	■	
Delayed output	P32Q_1_3	■	■
Protection inhibited	P32Q_1_16	■	
Positive reactive power	P32Q_1_54	■	
Negative reactive power	P32Q_1_55	■	

(1) *Under reference conditions (IEC 60255-6).*
(2) *Sn = √3 Un In.*

Phase undercurrent
ANSI code 37

Protection for pumps.

Description
Protection of pumps against the consequences of a loss of priming by detection of motor no-load operation.

This protection is single-phase.
- it picks up when phase 1 current (I1) drops below the Is set point.

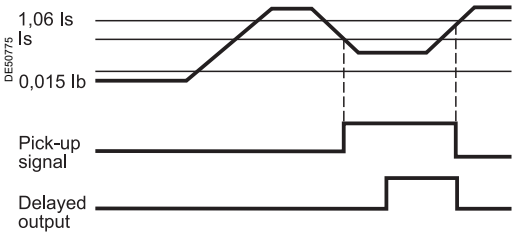

Current sag.

- it is inactive when the current is less than 1.5 % of In.
- it is insensitive to current drops due to circuit breaker tripping.

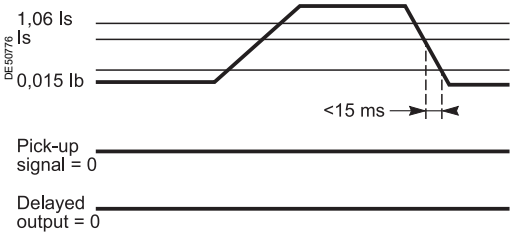

Circuit breaker tripping.

- the protection function includes a definite time delay.

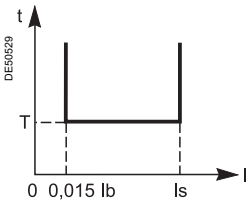

This protection function may be inhibited by a logic input.
It can be remotely reset by a remote control order (TC32).

Block diagram

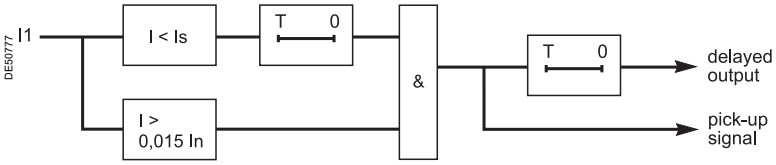

Phase undercurrent
ANSI code 37

Characteristics

Settings			
Is set point			
Setting range	5 % Ib to 100 % Ib		
Accuracy (1)	±5 %		
Resolution	1 %		
Drop out/pick up ratio	106 % ±3 %		
Time delay T			
Setting range	50 ms to 300 s		
Accuracy (1)	±2 % or ±25 ms		
Resolution	10 ms or 1 digit		
Characteristic times			
Operation time	pick-up < 55 ms from 2 Is to 0.02 In		
Overshoot time	< 40 ms from 2 Is to 0.02 In		
Reset time	< 45 ms from 0.02 In to 2 Is		
Inputs			
Designation	**Syntax**	**Equations**	
Protection reset	P37_1_101	■	
Protection inhibition	P37_1_113	■	
Outputs			
Designation	**Syntax**	**Equations**	**Matrix**
Instantaneous output (pick-up)	P37_1_1	■	
Delayed output	P37_1_3	■	■
Protection inhibited	P37_1_16	■	

(1) *Under reference conditions (IEC 60255-6).*

TS/TC equivalence for each protocol

Modbus	DNP3	IEC 60870-5-103	IEC 61850
TC	**Binary Output**	**ASDU, FUN, INF**	**LN.DO.DA**
TC32	BO13	20, 105, 101	A37_PTUC.ProRs.ctlVal

Directional active underpower
ANSI code 37P

Check on active power flow.

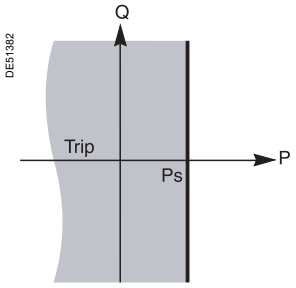

Tripping zone (normal direction).

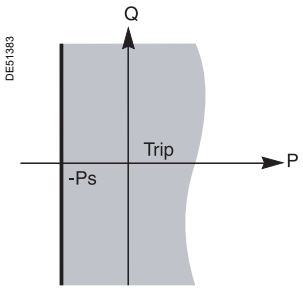

Tripping zone (reverse direction).

Description

Two-way protection based on active power. The function monitors the calculated active power flows:
- to adapt the number of parallel sources to fit the network load power demand
- to create an isolated system in an installation with its own generating unit.

The protection function picks up if the active power flowing in one direction or the other (supplied or drawn) is less than the Ps set point.
It includes a definite (DT) time delay T.
It is based on the two or three-wattmeter method, depending on the connection conditions:
- V1, V2, V3 and I1, I2, I3: 3 wattmeters
- V1, V2, V3 and I1, I3: 2 wattmeters
- U21, U32 + V0 and I1, I2, I3: 3 wattmeters
- U21, U32 + V0 and I1, I3: 2 wattmeters
- U21, U32 without V0: 2 wattmeters
- other cases: protection function unavailable.

The power sign is determined according to the general feeder or incomer parameter, according to the convention:
- for the feeder circuit:
  - power supplied by the busbars is positive (normal direction)
  - power supplied to the busbars is negative

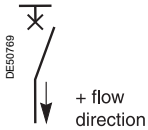

- for the incomer circuit:
  - power supplied to the busbar is positive (normal direction)
  - power supplied by the busbars is negative.

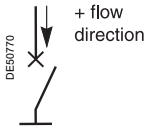

Block diagram

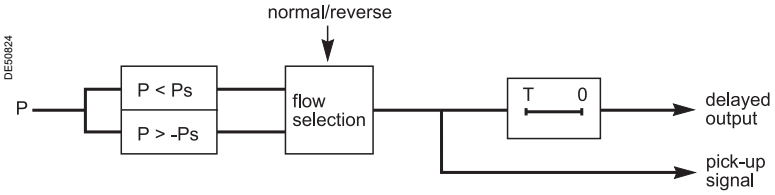

Characteristics

Settings			
Tripping direction			
Setting range	Normal / reverse		
Ps set point			
Setting range	5 % of Sn (2) to 100 % of Sn (2)		
Accuracy (1)	±5 % for Ps between 5 % Sn and 40 % Sn ±3 % for Ps between 40 % Sn and 120 % Sn		
Resolution	0.1 kW		
Drop out/pick up ratio	106 %		
Time delay T			
Setting range	100 ms to 300 s		
Accuracy (1)	±2 % or -10 ms to +25 ms		
Resolution	10 ms or 1 digit		
Characteristic times			
Operation time	< 120 ms		
Overshoot time	< 65 ms		
Reset time	< 60 ms		
Inputs			
Designation	**Syntax**	**Equations**	
Protection reset	P37P_x_101	■	
Protection inhibition	P37P_x_113	■	
Outputs			
Designation	**Syntax**	**Equations**	**Matrix**
Instantaneous output (pick-up)	P37P_x_1	■	
Delayed output	P37P_x_3	■	■
Protection inhibited	P37P_x_16	■	

x: unit number.
(1) *Under reference conditions (IEC 60255-6).*
(2) *Sn = √3.Un In.*

Temperature monitoring
ANSI code 38/49T

Protection against heat rise in equipment by measuring the temperature with a sensor.

Description

Protection that detects abnormal heat rise by measuring the temperature inside equipment fitted with sensors:
- ■ transformer: protection of primary and secondary windings
- ■ motor and generator: protection of stator windings and bearings.

This protection function is associated with an RTD of the Pt100 platinum (100 Ω at 0 °C or 32 °F) or nickel (Ni100 or Ni120) type, in accordance with the IEC 60751 and DIN 43760 standards.
- ■ it picks up when the monitored temperature is greater than the Ts set point
- ■ it has two independent set points:
  - □ alarm set point
  - □ tripping set point
- ■ when the protection function is activated, it detects whether the RTD is shorted or disconnected:
  - □ RTD shorting is detected if the measured temperature is less than -35 °C or -31 °F (measurement displayed "*****")
  - □ RTD disconnection is detected if the measured temperature is greater than +205 °C or +401 °F (measurement displayed "-****").

If an RTD fault is detected, the protection function is inhibited and its output relays are set to zero.
The "RTD fault" item is also made available in the control matrix and an alarm message is generated specifying the number of the MET148-2 module for the faulty RTD.

Block diagram

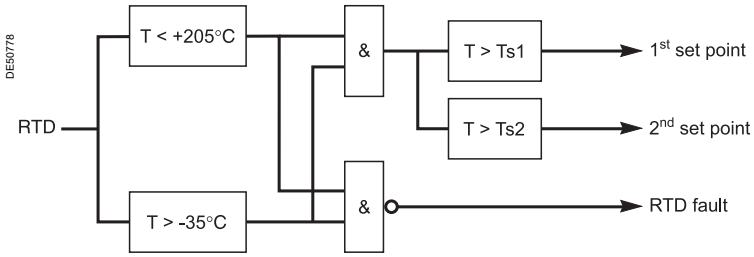

Characteristics

Settings			
Alarm and trip set points TS1, TS2			
Setting range	0°C to 180°C	32°F to 356°F	
Accuracy (1)	±1.5°C	±2.7°F	
Resolution	1°C	1°F	
Pick up / drop out difference	3°C	5.4°F	
Inputs			
Designation	**Syntax**	**Equations**	
Protection reset	P38/49T_x_101	■	
Protection inhibition	P38/49T_x_113	■	
Outputs			
Designation	**Syntax**	**Equations**	**Matrix**
Protection output	P38/49T_x_3	■	■
Alarm	P38/49T_x_10	■	■
RTD fault	P38/49T_x_12	■	
Protection inhibited	P38/49T_x_16	■	

x: unit number.
***(1)** Under reference conditions (IEC 60255-6).*

Field loss
ANSI code 40

Protection against field loss on synchronous machines or generators.

Description

The protection function is made up of two circular tripping characteristics on the impedance plane (R, X). It picks up when the positive sequence impedance Zd enters one of the circular tripping characteristics.

$$\vec{Z}d = \frac{\vec{V}d}{\vec{I}d}$$

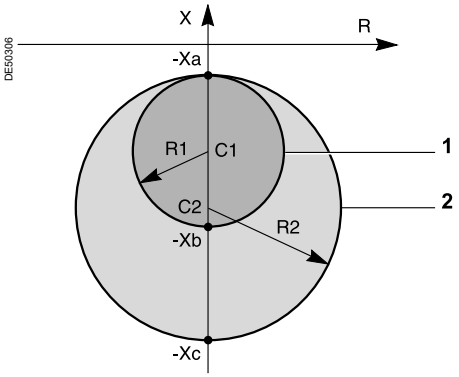

Circular tripping characteristics

■ Case of a generator incomer or motor feeder

	Circle 1	Circle 2
Centre	C1 = -(Xa + Xb)/2	C2 = -(Xa + Xc)/2
Radius	R1 = (Xb - Xa)/2	R2 = (Xc - Xa)/2

■ Case of a generator feeder or motor incomer:
the tripping characteristics are symmetrical with respect to the R axis

	Circle 1	Circle 2
Centre	C1 = (Xa + Xb)/2	C2 = (Xa + Xc)/2
Radius	R1 = (Xb - Xa)/2	R2 = (Xc - Xa)/2

Block diagram

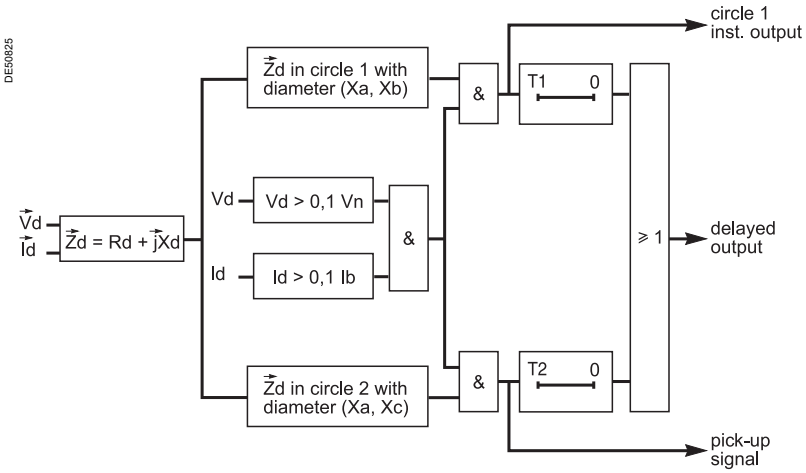

Field loss
ANSI code 40



PE50148

3

SFT2841 setting help

The SFT2841 software includes a setting assistance function to calculate the values of Xa, Xb and Xc according to the electrical characteristics of the machine (and transformer, when applicable).
Data used:
- ■ synchronous machine:
- □ synchronous reactance Xd in %
- □ transient synchronous reactance X'd in %
- ■ transformer:
- □ winding 1 voltage Un1 in V/kV
- □ short-circuit voltage Usc in %
- □ rated power in kVA/MVA
- □ copper losses in kΩ/MΩ

The proposed settings are circle 1 with a diameter Zn if Xd ≥ 200 % or a diameter Xd/2 in all other cases, and circle 2 with a diameter Xd.
The two circles are offset from zero by -X'd/2.
Zn = the rated machine impedance:

$$Zn = \frac{Un1}{\sqrt{3}Ib}.$$

Characteristics

Settings			
Common point: Xa			
Setting range	0.02Vn/Ib ≤ Xa ≤ 0.20Vn/Ib + 187.5 kΩ or 0.001 Ω		
Accuracy (1)	±5 %		
Resolution	1 %		
Circle 1: Xb			
Setting range	0.20Vn/Ib ≤ Xb ≤ 1.40Vn/Ib + 187.5 kΩ		
Accuracy (1)	±5 %		
Resolution	0.001 Ω or 1 digit		
Drop out/pick up ratio	105 % ±3 % of circle 1 diameter		
Circle 2: Xc			
Setting range	0.60Vn/Ib ≤ Xc ≤ 3Vn/Ib + 187.5 kΩ		
Accuracy (1)	±5 %		
Resolution	0.001 Ω or 1 digit		
Drop out/pick up ratio	105 % ±3 % of circle 2 diameter		
T1 time: tripping time delay circle 1			
Setting range	50 ms ≤ T ≤ 300 s		
Accuracy (1)	±2 % or from -10 ms to +25 ms		
Resolution	10 ms or 1 digit		
T2 time: tripping time delay circle 2			
Setting range	100 ms ≤ T ≤ 300 s		
Accuracy (1)	±2 % or from -10 ms to +25 ms		
Resolution	10 ms or 1 digit		
Characteristic times (1)			
Operation time	Pick-up < 40 ms from 0 to C1 (typically 25 ms) Pick-up < 40 ms from 0 to C2 (typically 25 ms)		
Overshoot time	< 50 ms		
Reset time	< 50 ms (for T1 = 0)		
Inputs			
Designation	**Syntax**	**Equations**	
Protection reset	P40_1_101	■	
Protection inhibition	P40_1_113	■	
Outputs			
Designation	**Syntax**	**Equations**	**Matrix**
Instantaneous output (pick-up)	P40_1_1	■	
Delayed output	P40_1_3	■	■
Protection inhibited	P40_1_16	■	
Instantaneous protection 1 (circle 1)	P40_1_23	■	

(1) *Under reference conditions (IEC 60255-6).*

Field loss
ANSI code 40

Example 1. Synchronous generator

Synchronous generator data
- S = 3.15 MVA
- Un1 = 6.3 kV
- Xd = 233 %
- X'd = 21 %

Protection setting
To set the protection function, it is necessary to calculate the rated generator impedance Zn:
- **Ib = S/($\sqrt{3}$.Un1) = 289 A**
- **Zn = Un1/ ($\sqrt{3}$.Ib) = 12.586 Ω**

Generally speaking, circle 1 is set with a diameter Zn, offset by -X'd/2, and circle 2 is set with a diameter Xd, offset by -X'd/2:
- **Xa = (X'd(%)/200)Zn = 1.321 Ω**
- **Xb = (X'd(%)/200 + min(1,Xd/200))×Zn = 13.907 Ω**
- **Xc = (X'd(%)/200 + Xd/100)Zn = 30.646 Ω**

The faults detected in circle 1 are violent field-loss faults that must be cleared rapidly. Circle 2 may concern faults other than field-loss faults and its tripping time is longer:
- T1 = 70 ms
- T2 = 500 ms.

Example 2. Generator-transformer unit applications

Synchronous generator data
- Sg = 19 MVA
- Un2 = 5.5 kV
- Xd = 257 %
- X'd = 30 %

Transformer data
- St = 30 MVA
- Un1 = 20 kV / Un2 = 5.5 kV
- Usc = 7 %
- Pcu = 191 kW

Protection setting
To set the protection function, it is necessary to calculate the rated generator impedance at voltage Un1:
- **Ib = Sg/($\sqrt{3}$Un1) = 548 A**
- **Zn = Un1/ ($\sqrt{3}$.Ib) = 21.071 Ω**

The transformer impedance at voltage Un1 is:
Zt = Usc/100.(Un1)²/St = 0.933 Ω
The transformer resistance at voltage Un1 is:
Rt = Pcu.(Un1/St)² = 0.085 Ω
The transformer reactance at voltage Un1 is:

$$\mathbf{Xt = \sqrt{Zt^2 - Rt^2} = 0{,}929\ \Omega}$$

Circle 1 is set with a diameter Zn, offset by -X'd/2 and the transformer reactance.
Circle 2 is set with a diameter Xd, offset by -X'd/2 and the transformer reactance.
- **Xa = (X'd(%)/200)Zn + Xt = 4.09 Ω**
- **Xb = (X'd(%)/200 + 1)Zn + Xt = 25.161 Ω**
- **Xc = (X'd(%)/200 + Xd(%)/100)Zn + Xt = 58.243 Ω**

The faults detected in circle 1 are violent field-loss faults that must be cleared rapidly. Circle 2 may concern faults other than field-loss faults and its tripping time is longer:
- T1 = 70 ms
- T2 = 500 ms.

Negative sequence / unbalance
ANSI code 46

Phase unbalance protection for lines and equipment.

Description

Protection against phase unbalance, detected by the measurement of negative sequence current:

- sensitive protection to detect 2-phase faults at the ends of long lines
- protection of equipment against temperature rise, caused by an unbalanced power supply, phase inversion or loss of phase, and against phase current unbalance.

This function picks up if the negative sequence component of phase currents is greater than the operation set point.

It is time-delayed. The time delay may be definite time or IDMT according to a standardized curve, a specially adapted Schneider curve or an RI^2 curve for generator protection.

Tripping curve
Schneider IDMT
IEC inverse time SIT / A
IEC very inverse time VIT or LTI / B
IEC extremely inverse time EIT / C
IEEE moderately inverse (IEC / D)
IEEE very inverse (IEC / E)
IEEE extremely inverse (IEC / F)
RI^2 curve

Block diagram

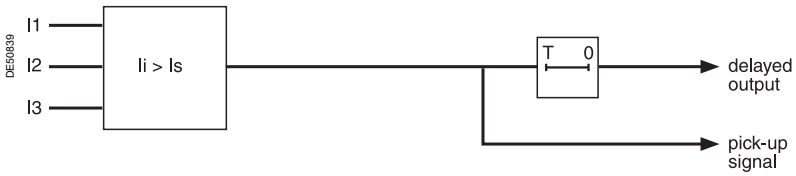

Characteristics

Settings			
Tripping curve			
Setting range		See list above	
Is set point			
Setting range	definite time	10 % to 500 % of Ib	
	Schneider IDMT	10 % to 50 % of Ib	
	IEC or IEEE IDMT	10 % to 100 % of Ib	
	RI^2 curve	3 % to 20 % of Ib	
Accuracy (1)		±5 % or ±0.004 In	
Resolution		1 %	
Drop out/pick up ratio		93.5 % ±5 % or > (1 - 0.005 In/Is) x 100 %	
Time delay T			
Setting range	definite time	100 ms ⩽ T ⩽ 300 s	
	IDMT	100 ms ⩽ T ⩽ 1 s or TMS (2)	
Accuracy (1)	definite time	±2 % or ±25 ms	
	IDMT	±5 % or ±35 ms	
Resolution		10 ms or 1 digit	
K (RI^2 curve only)			
Setting range		1 to 100	
Resolution		1	
Characteristic times			
Operation time		Pick-up < 55 ms at 2 Is	
Overshoot time		< 50 ms at 2 Is	
Reset time		< 55 ms at 2 Is	

Inputs			
Designation	**Syntax**	**Equations**	
Protection reset	P46_x_101	■	
Protection inhibition	P46_x_113	■	
Outputs			
Designation	**Syntax**	**Equations**	**Matrix**
Instantaneous output (pick-up)	P46_x_1	■	
Delayed output	P46_x_3	■	■
Protection inhibited	P46_x_16	■	

x: unit number.

(1) *Under reference conditions (IEC 60255-6).*

(2) *Setting ranges in TMS (Time Multiplier Setting) mode:*
Inverse (SIT) and IEC SIT/A: 0.034 to 0.336
Very inverse (VIT) and IEC VIT/B: 0.067 to 0.666
Very inverse (LTI) and IEC LTI/B: 0.008 to 0.075
Ext. inverse (EIT) and IEC EIT/C: 0.124 to 1.237
IEEE moderately inverse: 0.415 to 4.142
IEEE very inverse: 0.726 to 7.255
IEEE extremely inverse: 1.231 to 12.30.

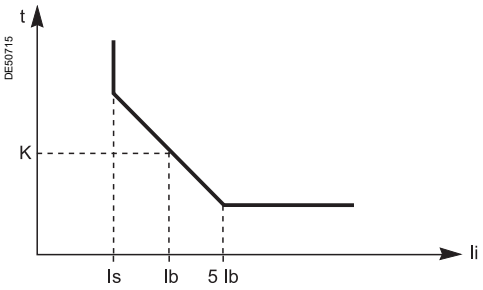

RI² curve.

Setting example for RI² curves

A generator can handle a certain level of negative sequence current on a continuous basis. The Is continuous level, indicated by the manufacturer, is generally between 5 and 10 % of the base current Ib.
Typical values are:

Type of generator		Ii permissible (% Ib)
Salient poles	with amortisseur windings	10
	without amortisseur windings	5
Cylindrical rotors	Indirectly cooled	10
	Sn ⩽ 960 MVA	8
	960 MVA < Sn ⩽ 1200 MVA	6
	1200 MVA < Sn	5

Reference IEEE C37.102-1987.

When this current level is exceeded, the generator can handle a negative sequence current Ii for a time td, corresponding to the following equation:

$$td = \frac{K}{\left(\frac{\vec{I}_i}{Ib}\right)^2}$$

The K value is an adjustable constant that depends on the type of generator, generally between 1 and 40. Typical values of K are:

Type of generator		K
Salient poles		40
Synchronous condenser		30
Cylindrical rotors	Indirectly cooled	20
	Sn ⩽ 800 MVA	10
	800 MVA < Sn ⩽ 1600 MVA	10 - 0.00625.(MVA - 800)

Reference IEEE C37.102-1987.

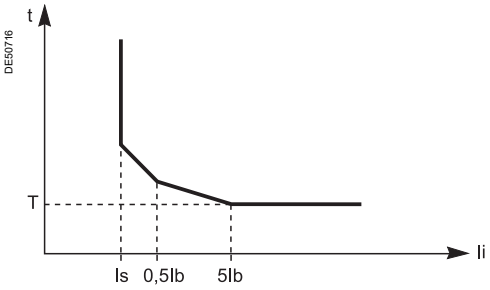

Schneider curve.

Schneider IDMT curve

For Ii > Is, the time delay depends on the value of Ii/Ib (Ib: base current of the protected equipment defined when the general parameters are set).
T corresponds to the time delay for Ii/Ib = 5.
The tripping curve is defined according to the following equations:

■ for Is/Ib ⩽ Ii/Ib ⩽ 0.5

$$t = \frac{3.19}{(Ii/Ib)^{1.5}} \times T$$

■ for 0.5 ⩽ Ii/Ib ⩽ 5

$$t = \frac{4.64}{(Ii/Ib)^{0.96}} \times T$$

■ for Ii/Ib > 0.5
t = T.

Negative sequence / unbalance
ANSI code 46

Determination of tripping time for different negative sequence current values for a given Schneider curve

Use the table to find the value of X that corresponds to the required negative sequence current. The tripping time is equal to XT.

Example

given a tripping curve with the setting T = 0.5 s.
What is the tripping time at 0.6 Ib?
Use the table to find the value of X that corresponds to 60 % of Ib.
The table indicates X = 7.55. The tripping time is equal to: 0.5 x 7.55 = 3.755 s.

Schneider IDMT tripping curve

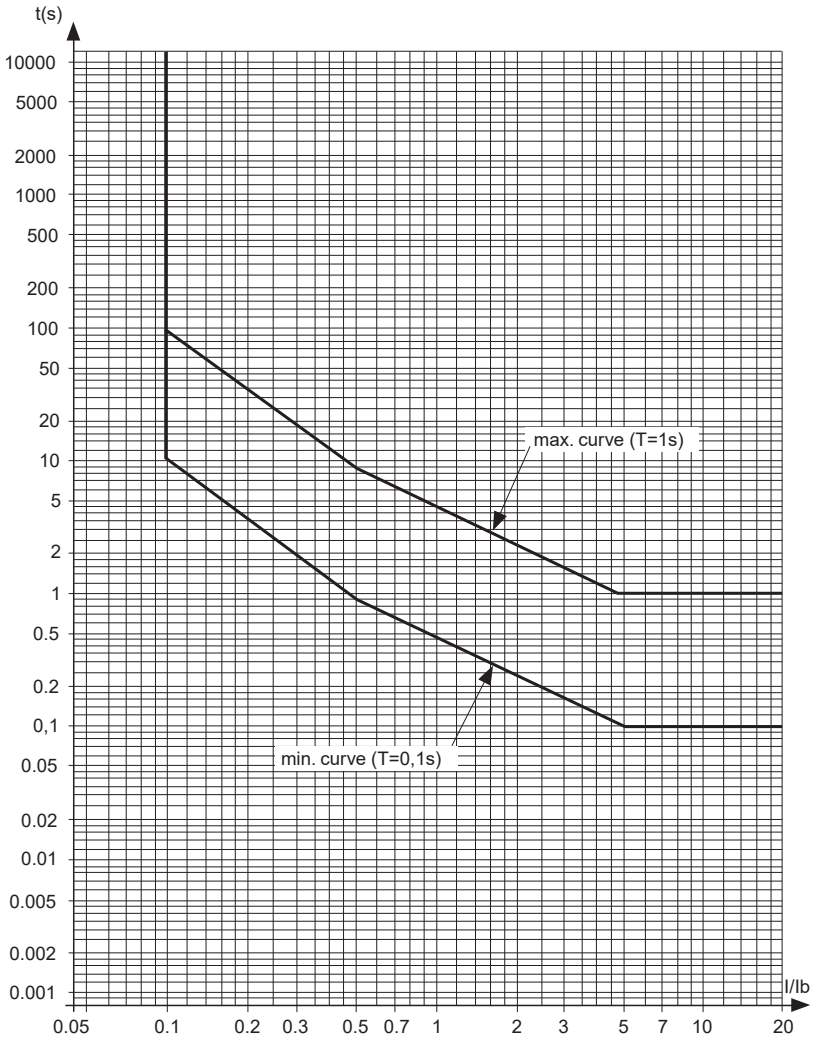

Ii (% Ib)	10	15	20	25	30	33.33	35	40	45	50	55	57.7	60	65	70	75
X	99.95	54.50	35.44	25.38	19.32	16.51	15.34	12.56	10.53	9.00	8.21	7.84	7.55	7.00	6.52	6.11

Ii (% Ib) cont.	80	85	90	95	100	110	120	130	140	150	160	170	180	190	200	210
X cont.	5.74	5.42	5.13	4.87	4.64	4.24	3.90	3.61	3.37	3.15	2.96	2.80	2.65	2.52	2.40	2.29

Ii (% Ib) cont.	220	230	240	250	260	270	280	290	300	310	320	330	340	350	360	370
X cont.	2.14	2.10	2.01	1.94	1.86	1.80	1.74	1.68	1.627	1.577	1.53	1.485	1.444	1.404	1.367	1.332

Ii (% Ib) cont.	380	390	400	410	420	430	440	450	460	470	480	490	⩾ 500
X cont.	1.298	1.267	1.236	1.18	1.167	1.154	1.13	1.105	1.082	1.06	1.04	1.02	1

Negative sequence overvoltage
ANSI code 47

Phase unbalance protection.

Description

Protection against phase unbalance resulting from phase inversion, unbalanced supply or distant fault, detected by the measurement of negative sequence voltage Vi.
It includes a definite time delay T.
It does not operate when only one voltage is connected to Sepam.

Block diagram

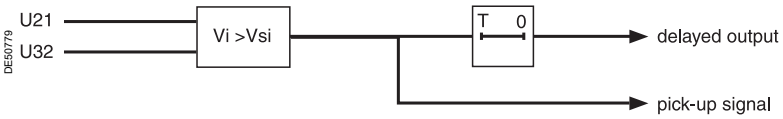

Characteristics

Settings			
Vsi set point			
Setting range	1 % Unp to 50 % Unp		
Accuracy (1)	±2 % or 0.005 Unp		
Resolution	1 %		
Drop out/pick up ratio	97 % ±1 % or > (1 - 0.006 Unp/Vsi) x 100 %		
Time delay T			
Setting range	50 ms to 300 s		
Accuracy (1)	±2 % or ±25 ms		
Resolution	10 ms or 1 digit		
Characteristic times			
Operation time	Pick-up < 40 ms at 2 Vsi		
Overshoot time	< 50 ms at 2 Vsi		
Reset time	< 50 ms at 2 Vsi		
Inputs			
Designation	**Syntax**	**Equations**	
Protection reset	P47_x_101	■	
Protection inhibition	P47_x_113	■	
Outputs			
Designation	**Syntax**	**Equations**	**Matrix**
Instantaneous output (pick-up)	P47_x_1	■	
Delayed output	P47_x_3	■	■
Protection inhibited	P47_x_16	■	

x: unit number.
(1) *Under reference conditions (IEC 60255-6).*

Excessive starting time, locked rotor
ANSI code 48/51LR

Detection of excessive starting time and locked rotors for motor protection.

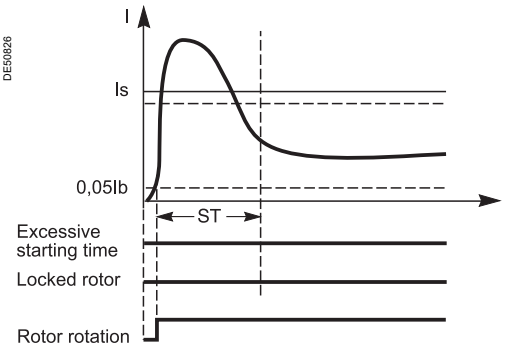

Case of normal starting.

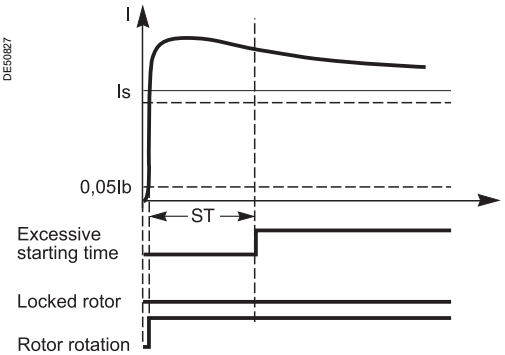

Case of excessive starting time.

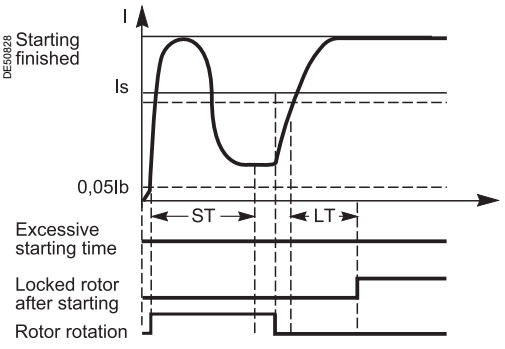

Case of locked rotor.

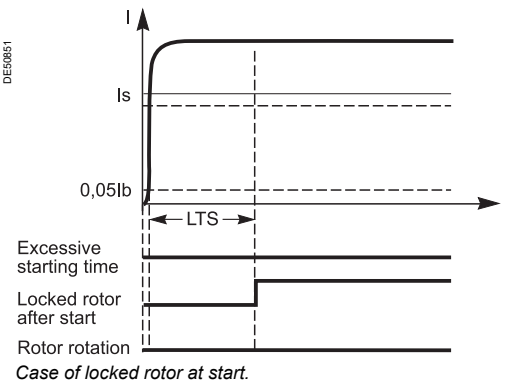

Case of locked rotor at start.

Description

Protection against motor overheating caused by:
- excessive motor starting time due to overloads (e.g. conveyor) or insufficient supply voltage
- locked rotor due to motor load (e.g. crusher):
  - during normal operation, after a normal start
  - directly at motor start, before detection of an excessive starting time.

This function is three-phase.
Starting is detected when the current drawn is greater than 5 % of current Ib.
This function comprises two parts:
- excessive starting time: during starting, the protection picks up when one of the 3 phase currents is greater than the set point Is for a longer period of time than the ST time delay (normal starting time)
- locked rotor:
  - during normal operation (after starting), the protection picks up when one of the 3 phase currents is greater than the set point Is for a longer period of time than the LT time delay (DT).
  - locked on start: large motors may have very long starting times, due to their inertia or a reduction in the voltage. This starting time may be longer than the permissible rotor locking time. To protect such a motor against rotor locking, an LTS time may be set to initiate tripping if a start is detected (I > Is) and if the motor speed is zero.

Zero motor speed is detected by one of the three following options:
- Rotor rotation detection logic input from a zero speed sensor
- minimum speed function (ANSI 14)
- motor thermal overload function (ANSI 49)

Motor re-acceleration

During re-acceleration, the motor draws a level of current similar to the start-up current (> Is), but in this case the current did not first drop to a level under 5 % of Ib. The ST time delay, which corresponds to the normal starting time, can be reinitialised by a logic input or information from a logic equation ("motor re-acceleration" input) and enables the user to:
- reinitialize the **excessive starting time** protection
- set the **locked rotor** protection LT time delay to a low value.

Block diagram

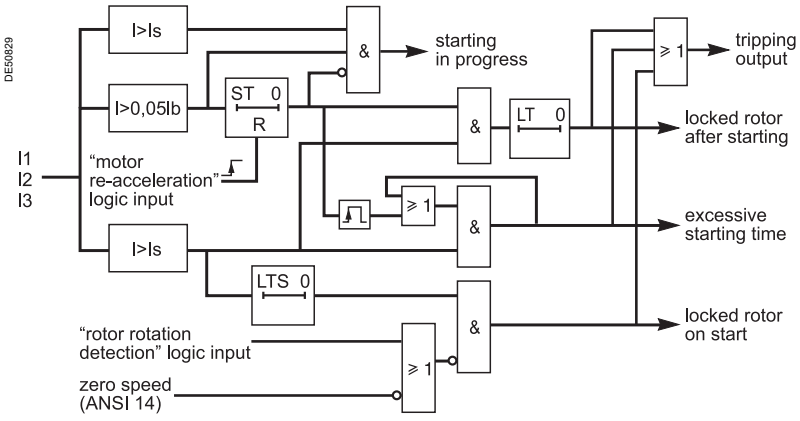

Excessive starting time, locked rotor
ANSI code 48/51LR

Characteristics

Settings		
Is set point		
Setting range		50 % to 500 % of Ib
Accuracy (1)		±5 %
Resolution		1 %
Drop out/pick up ratio		93.5 % ±5 %
Time delay T		
Setting range	ST	500 ms to 300 s
	LT	50 ms to 300 s
	LTS	50 ms to 300 s
Accuracy (1)		±2 % or ±25 ms at 2 Is
Resolution		10 ms

Inputs		
Designation	**Syntax**	**Equations**
Protection reset	P48/51LR_1_101	■
Motor re-acceleration	P48/51LR_1_102	■
Protection inhibition	P48/51LR_1_113	■

Outputs			
Designation	**Syntax**	**Equations**	**Matrix**
Protection output	P48/51LR_1_3	■	■
Locked rotor	P48/51LR_1_13	■	■
Excessive starting time	P48/51LR_1_14	■	■
Locked rotor at start-up	P48/51LR_1_15	■	■
Protection inhibited	P48/51LR_1_16	■	
Starting in progress	P48/51LR_1_22	■	

(1) *Under reference conditions (IEC 60255-6).*

Thermal overload for cables
ANSI code 49RMS

Protection of cables against thermal damage caused by overloads.

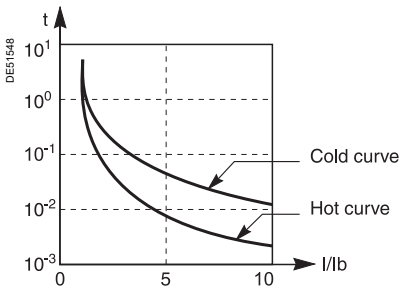

Tripping curves.

Description

This protection function is used to protect cables against overloads, based on measurement of the current drawn.
The current measured by the thermal protection is an RMS 3-phase current which takes into account harmonics up to number 13.
The highest current of the three phases I1, I2 and I3, subsequently called phase current Iph, is used to calculate the heat rise:
Iph = max(I1, I2, I3).

The calculated heat rise, proportional to the square of the current drawn, depends on the current drawn and the previous temperature status. Under steady-state conditions, it is equal to:

$$E = \left(\frac{Iph}{Ib}\right)^2 \times 100 \text{ in \%}$$

The protection function issues the trip order when the phase current is greater than the permissible current for the cable. The value of the base current Ib must absolutely be less than the permissible current Ia. By default, we use Ib ≈ Ia/1.4.
The protection tripping time is set by the time constant T.

Cold curve: $\frac{t}{T} = \ln\left(\frac{\left(\frac{I}{Ib}\right)^2}{\left(\frac{I}{Ib}\right)^2 - \left(\frac{Ia}{Ib}\right)^2}\right)$ where ln: natural logarithm.

Hot curve: $\frac{t}{T} = \ln\left(\frac{\left(\frac{I}{Ib}\right)^2 - 1}{\left(\frac{I}{Ib}\right)^2 - \left(\frac{Ia}{Ib}\right)^2}\right)$ where ln: natural logarithm.

The present heat rise is saved in the event of an auxiliary power failure.

Block diagram

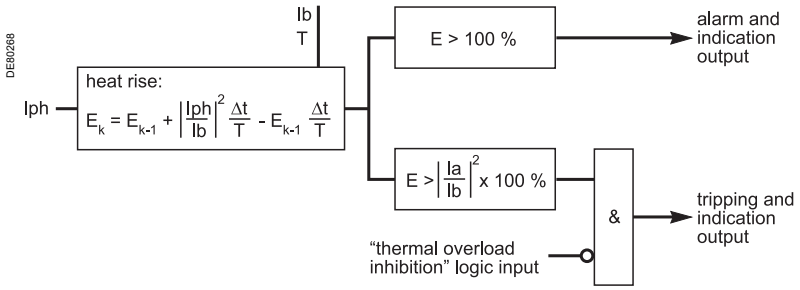

User information

The following information is available for the user:
- heat rise
- time before tripping (with constant current).

Characteristics

Settings			
Permissible current Ia			
Setting range	< 1 to 1.73 Ib		
Accuracy (1)	±2 %		
Resolution	1 A		
Time constant T			
Setting range	1 min. to 600 min.		
Resolution	1 min.		
Characteristic times (1)			
Operation time accuracy	±2 % or ±1 s		
Inputs			
Designation	**Syntax**	**Equations**	
Protection reset	P49RMS_1_101	■	
Protection inhibition	P49RMS_1_113	■	
Outputs			
Designation	**Syntax**	**Equations**	**Matrix**
Delayed output	P49RMS_1_3	■	■
Alarm	P49RMS_1_10	■	■
Inhibit closing	P49RMS_1_11	■	■
Protection inhibited	P49RMS_1_16	■	
Hot state	P49RMS_1_18	■	
Inhibit thermal overload	P49RMS_1_32	■	

***(1)** Under reference conditions (IEC 60255-6).*

Thermal overload for cables
ANSI code 49RMS

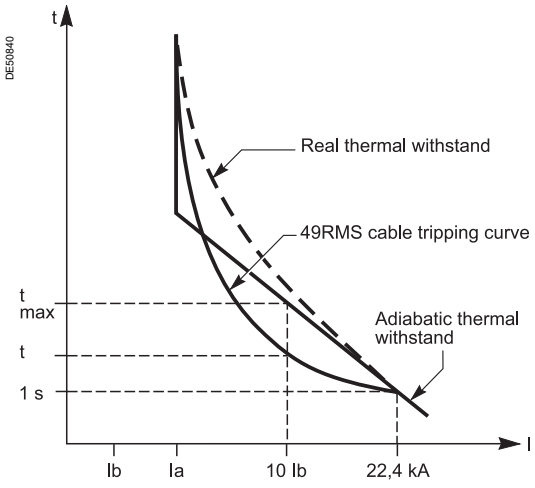

Example

Consider a copper cable, 185 mm^2, with a permissible current Ia = 485 A and a 1- second thermal withstand Ith_1 s = 22.4 kA.
The thermal time constant of a cable depends in its installation method. Typical time-constant values are between 10 and 60 minutes. For buried cables, the time constant is between 20 and 60 minutes, for non-buried cables, it is between 10 and 40 minutes.
For the cable in question, the selected values are T = 30 minutes and Ib = 350 A.

Check on compatibility between the 49RMS curve and the adiabatic thermal withstand.
Conditions are correct at 10 Ib.
In the range of currents close to the permissible current, the 1-second thermal withstand is used to estimate maximum thermal withstand for the cable, assuming there are no heat exchanges. The maximum tripping time is calculated as:
I^2 x tmax = constant = $(Ith_1\ s)^2$ x 1.

For the cable in question and at 10 Ib:
tmax = $(Ith_1\ s/\ I0Ib)^2$ = $(22400 / 3500)^2$ = 41 s.

For I = 10 Ib = 3500 A and Ia/Ib = 1.38, the value of k in the cold tripping curve table is k ≈ 0.0184.
The tripping time at 10 Ib is therefore:
t = k x T x 60 = 0.0184 x 30 x 60 = 35.6s < tmax.

For a 10 Ib fault occuring after a rated operation phase, with 100 % heat rise, the value of k is:

k ≈ 0,0097.
The tripping time is:
t = k x T x 60 = 0.0097 x 30 x 60 = 17.5 s

Check on discrimination
Discrimination between 49RMS for the cable and the downstream protection curves, including 49RMS protection functions, must be checked to avoid any risk of nuisance tripping.

Thermal overload for cables
ANSI code 49RMS
Tripping curves

Curves for initial heat rise = 0 %

Iph/Ib Ia/Ib	0.55	0.60	0.65	0.70	0.75	0.80	0.85	0.90	0.95	1.00	1.05	1.10	1.15	1.20	1.25	1.30
0.50	1.7513	1.1856	0.8958	0.7138	0.5878	0.4953	0.4247	0.3691	0.3244	0.2877	0.2572	0.2314	0.2095	0.1907	0.1744	0.1601
0.55		1.8343	1.2587	0.9606	0.7717	0.6399	0.5425	0.4675	0.4082	0.3603	0.3207	0.2877	0.2597	0.2358	0.2152	0.1972
0.60			1.9110	1.3269	1.0217	0.8267	0.6897	0.5878	0.5090	0.4463	0.3953	0.3531	0.3178	0.2877	0.2619	0.2396
0.65				1.9823	1.3907	1.0793	0.8789	0.7373	0.6314	0.5491	0.4832	0.4295	0.3849	0.3473	0.3153	0.2877
0.70					2.0488	1.4508	1.1338	0.9287	0.7829	0.6733	0.5878	0.5191	0.4629	0.4159	0.3763	0.3424
0.75						2.1112	1.5075	1.1856	0.9762	0.8267	0.7138	0.6253	0.5540	0.4953	0.4463	0.4047
0.80							2.1699	1.5612	1.2349	1.0217	0.8687	0.7527	0.6615	0.5878	0.5270	0.4759
0.85								2.2254	1.6122	1.2819	1.0652	0.9091	0.7904	0.6966	0.6206	0.5578
0.90									2.2780	1.6607	1.3269	1.1069	0.9480	0.8267	0.7306	0.6526
0.95										2.3279	1.7070	1.3699	1.1470	0.9855	0.8618	0.7636
1.00											2.3755	1.7513	1.4112	1.1856	1.0217	0.8958
1.05												2.4209	1.7937	1.4508	1.2228	1.0566
1.10													2.4643	1.8343	1.4890	1.2587
1.15														2.5060	1.8734	1.5258
1.20															2.5459	1.9110
1.25																2.5844

Iph/Ib Ia/Ib	1.35	1.40	1.45	1.50	1.55	1.60	1.65	1.70	1.75	1.80	1.85	1.90	1.95	2.00	2.20	2.40
0.50	0.1475	0.1365	0.1266	0.1178	0.1099	0.1028	0.0963	0.0905	0.0852	0.0803	0.0759	0.0718	0.0680	0.0645	0.0530	0.0444
0.55	0.1815	0.1676	0.1553	0.1444	0.1346	0.1258	0.1178	0.1106	0.1040	0.0980	0.0925	0.0875	0.0829	0.0786	0.0645	0.0539
0.60	0.2201	0.2029	0.1878	0.1744	0.1623	0.1516	0.1418	0.1330	0.1251	0.1178	0.1111	0.1051	0.0995	0.0943	0.0773	0.0645
0.65	0.2637	0.2428	0.2243	0.2080	0.1934	0.1804	0.1686	0.1581	0.1485	0.1397	0.1318	0.1245	0.1178	0.1116	0.0913	0.0762
0.70	0.3132	0.2877	0.2653	0.2456	0.2281	0.2125	0.1984	0.1858	0.1744	0.1640	0.1545	0.1459	0.1380	0.1307	0.1067	0.0889
0.75	0.3691	0.3383	0.3113	0.2877	0.2667	0.2481	0.2314	0.2165	0.2029	0.1907	0.1796	0.1694	0.1601	0.1516	0.1236	0.1028
0.80	0.4326	0.3953	0.3630	0.3347	0.3098	0.2877	0.2680	0.2503	0.2344	0.2201	0.2070	0.1952	0.1843	0.1744	0.1418	0.1178
0.85	0.5049	0.4599	0.4210	0.3873	0.3577	0.3316	0.3084	0.2877	0.2691	0.2523	0.2371	0.2233	0.2107	0.1992	0.1617	0.1340
0.90	0.5878	0.5332	0.4866	0.4463	0.4112	0.3804	0.3531	0.3289	0.3072	0.2877	0.2701	0.2541	0.2396	0.2263	0.1832	0.1516
0.95	0.6836	0.6170	0.5608	0.5127	0.4710	0.4347	0.4027	0.3744	0.3491	0.3265	0.3061	0.2877	0.2710	0.2557	0.2064	0.1704
1.00	0.7956	0.7138	0.6456	0.5878	0.5383	0.4953	0.4578	0.4247	0.3953	0.3691	0.3456	0.3244	0.3052	0.2877	0.2314	0.1907
1.05	0.9287	0.8267	0.7431	0.6733	0.6142	0.5633	0.5191	0.4804	0.4463	0.4159	0.3888	0.3644	0.3424	0.3225	0.2585	0.2125
1.10	1.0904	0.9606	0.8569	0.7717	0.7005	0.6399	0.5878	0.5425	0.5027	0.4675	0.4363	0.4082	0.3830	0.3603	0.2877	0.2358
1.15	1.2934	1.1231	0.9916	0.8862	0.7996	0.7269	0.6651	0.6118	0.5654	0.5246	0.4884	0.4563	0.4274	0.4014	0.3192	0.2609
1.20	1.5612	1.3269	1.1549	1.0217	0.9147	0.8267	0.7527	0.6897	0.6353	0.5878	0.5460	0.5090	0.4759	0.4463	0.3531	0.2877
1.25	1.9473	1.5955	1.3593	1.1856	1.0509	0.9425	0.8531	0.7780	0.7138	0.6583	0.6098	0.5671	0.5292	0.4953	0.3898	0.3165
1.30	2.6214	1.9823	1.6286	1.3907	1.2155	1.0793	0.9696	0.8789	0.8026	0.7373	0.6808	0.6314	0.5878	0.5491	0.4295	0.3473
1.35		2.6571	2.0161	1.6607	1.4212	1.2445	1.1069	0.9959	0.9041	0.8267	0.7604	0.7029	0.6526	0.6081	0.4725	0.3804
1.40			2.6915	2.0488	1.6918	1.4508	1.2727	1.1338	1.0217	0.9287	0.8502	0.7829	0.7245	0.6733	0.5191	0.4159
1.45				2.7249	2.0805	1.7220	1.4796	1.3001	1.1601	1.0467	0.9527	0.8733	0.8050	0.7458	0.5699	0.4542
1.50					2.7571	2.1112	1.7513	1.5075	1.3269	1.1856	1.0712	0.9762	0.8958	0.8267	0.6253	0.4953
1.55						2.7883	2.1410	1.7797	1.5347	1.3529	1.2106	1.0952	0.9992	0.9179	0.6859	0.5397
1.60							2.8186	2.1699	1.8074	1.5612	1.3783	1.2349	1.1185	1.0217	0.7527	0.5878
1.65								2.8480	2.1980	1.8343	1.5870	1.4031	1.2587	1.1414	0.8267	0.6399
1.70									2.8766	2.2254	1.8605	1.6122	1.4272	1.2819	0.9091	0.6966

Thermal overload for cables
ANSI code 49RMS
Tripping curves

Curves for initial heat rise = 0 %

Iph/Ib Ia/Ib	2.60	2.80	3.00	3.20	3.40	3.60	3.80	4.00	4.20	4.40	4.60	4.80	5.00	5.50	6.00	6.50
0,50	0.0377	0.0324	0.0282	0.0247	0.0219	0.0195	0.0175	0.0157	0.0143	0.0130	0.0119	0.0109	0.0101	0.0083	0.0070	0.0059
0.55	0.0458	0.0393	0.0342	0.0300	0.0265	0.0236	0.0212	0.0191	0.0173	0.0157	0.0144	0.0132	0.0122	0.0101	0.0084	0.0072
0.60	0.0547	0.0470	0.0408	0.0358	0.0316	0.0282	0.0252	0.0228	0.0206	0.0188	0.0172	0.0157	0.0145	0.0120	0.0101	0.0086
0.65	0.0645	0.0554	0.0481	0.0421	0.0372	0.0331	0.0297	0.0268	0.0242	0.0221	0.0202	0.0185	0.0170	0.0141	0.0118	0.0101
0.70	0.0752	0.0645	0.0560	0.0490	0.0433	0.0385	0.0345	0.0311	0.0282	0.0256	0.0234	0.0215	0.0198	0.0163	0.0137	0.0117
0.75	0.0869	0.0745	0.0645	0.0565	0.0499	0.0444	0.0397	0.0358	0.0324	0.0295	0.0269	0.0247	0.0228	0.0188	0.0157	0.0134
0.80	0.0995	0.0852	0.0738	0.0645	0.0570	0.0506	0.0453	0.0408	0.0370	0.0336	0.0307	0.0282	0.0259	0.0214	0.0179	0.0153
0.85	0.1130	0.0967	0.0837	0.0732	0.0645	0.0574	0.0513	0.0462	0.0418	0.0380	0.0347	0.0319	0.0293	0.0242	0.0203	0.0172
0.90	0.1276	0.1091	0.0943	0.0824	0.0726	0.0645	0.0577	0.0520	0.0470	0.0427	0.0390	0.0358	0.0329	0.0271	0.0228	0.0194
0.95	0.1433	0.1223	0.1057	0.0923	0.0813	0.0722	0.0645	0.0581	0.0525	0.0477	0.0436	0.0400	0.0368	0.0303	0.0254	0.0216
1.00	0.1601	0.1365	0.1178	0.1028	0.0905	0.0803	0.0718	0.0645	0.0584	0.0530	0.0484	0.0444	0.0408	0.0336	0.0282	0.0240
1.05	0.1780	0.1516	0.1307	0.1139	0.1002	0.0889	0.0794	0.0714	0.0645	0.0586	0.0535	0.0490	0.0451	0.0371	0.0311	0.0264
1.10	0.1972	0.1676	0.1444	0.1258	0.1106	0.0980	0.0875	0.0786	0.0711	0.0645	0.0589	0.0539	0.0496	0.0408	0.0342	0.0291
1.15	0.2177	0.1848	0.1589	0.1383	0.1215	0.1076	0.0961	0.0863	0.0779	0.0708	0.0645	0.0591	0.0544	0.0447	0.0374	0.0318
1.20	0.2396	0.2029	0.1744	0.1516	0.1330	0.1178	0.1051	0.0943	0.0852	0.0773	0.0705	0.0645	0.0593	0.0488	0.0408	0.0347
1.25	0.2629	0.2223	0.1907	0.1656	0.1452	0.1285	0.1145	0.1028	0.0927	0.0842	0.0767	0.0702	0.0645	0.0530	0.0444	0.0377
1.30	0.2877	0.2428	0.2080	0.1804	0.1581	0.1397	0.1245	0.1116	0.1007	0.0913	0.0832	0.0762	0.0700	0.0575	0.0481	0.0408
1.35	0.3142	0.2646	0.2263	0.1960	0.1716	0.1516	0.1349	0.1209	0.1091	0.0989	0.0901	0.0824	0.0757	0.0621	0.0520	0.0441
1.40	0.3424	0.2877	0.2456	0.2125	0.1858	0.1640	0.1459	0.1307	0.1178	0.1067	0.0972	0.0889	0.0816	0.0670	0.0560	0.0475
1.45	0.3725	0.3122	0.2661	0.2298	0.2007	0.1770	0.1574	0.1409	0.1269	0.1150	0.1047	0.0957	0.0878	0.0720	0.0602	0.0510
1.50	0.4047	0.3383	0.2877	0.2481	0.2165	0.1907	0.1694	0.1516	0.1365	0.1236	0.1124	0.1028	0.0943	0.0773	0.0645	0.0547
1.55	0.4391	0.3659	0.3105	0.2674	0.2330	0.2050	0.1820	0.1627	0.1464	0.1325	0.1205	0.1101	0.1010	0.0828	0.0691	0.0585
1.60	0.4759	0.3953	0.3347	0.2877	0.2503	0.2201	0.1952	0.1744	0.1568	0.1418	0.1290	0.1178	0.1080	0.0884	0.0738	0.0625
1.65	0.5154	0.4266	0.3603	0.3091	0.2686	0.2358	0.2089	0.1865	0.1676	0.1516	0.1377	0.1258	0.1153	0.0943	0.0786	0.0666
1.70	0.5578	0.4599	0.3873	0.3316	0.2877	0.2523	0.2233	0.1992	0.1789	0.1617	0.1469	0.1340	0.1229	0.1004	0.0837	0.0709

Iph/Ib Ia/Ib	7.00	7.50	8.00	8.50	9.00	9.50	10.00	12.50	15.00	17.50	20.00
0.50	0.0051	0.0045	0.0039	0.0035	0.0031	0.0028	0.0025	0.0016	0.0011	0.0008	0.0006
0.55	0.0062	0.0054	0.0047	0.0042	0.0037	0.0034	0.0030	0.0019	0.0013	0.0010	0.0008
0.60	0.0074	0.0064	0.0056	0.0050	0.0045	0.0040	0.0036	0.0023	0.0016	0.0012	0.0009
0.65	0.0087	0.0075	0.0066	0.0059	0.0052	0.0047	0.0042	0.0027	0.0019	0.0014	0.0011
0.70	0.0101	0.0087	0.0077	0.0068	0.0061	0.0054	0.0049	0.0031	0.0022	0.0016	0.0012
0.75	0.0115	0.0101	0.0088	0.0078	0.0070	0.0063	0.0056	0.0036	0.0025	0.0018	0.0014
0.80	0.0131	0.0114	0.0101	0.0089	0.0079	0.0071	0.0064	0.0041	0.0028	0.0021	0.0016
0.85	0.0149	0.0129	0.0114	0.0101	0.0090	0.0080	0.0073	0.0046	0.0032	0.0024	0.0018
0.90	0.0167	0.0145	0.0127	0.0113	0.0101	0.0090	0.0081	0.0052	0.0036	0.0026	0.0020
0.95	0.0186	0.0162	0.0142	0.0126	0.0112	0.0101	0.0091	0.0058	0.0040	0.0030	0.0023
1.00	0.0206	0.0179	0.0157	0.0139	0.0124	0.0111	0.0101	0.0064	0.0045	0.0033	0.0025
1.05	0.0228	0.0198	0.0174	0.0154	0.0137	0.0123	0.0111	0.0071	0.0049	0.0036	0.0028
1.10	0.0250	0.0217	0.0191	0.0169	0.0151	0.0135	0.0122	0.0078	0.0054	0.0040	0.0030
1.15	0.0274	0.0238	0.0209	0.0185	0.0165	0.0148	0.0133	0.0085	0.0059	0.0043	0.0033
1.20	0.0298	0.0259	0.0228	0.0201	0.0179	0.0161	0.0145	0.0093	0.0064	0.0047	0.0036
1.25	0.0324	0.0282	0.0247	0.0219	0.0195	0.0175	0.0157	0.0101	0.0070	0.0051	0.0039
1.30	0.0351	0.0305	0.0268	0.0237	0.0211	0.0189	0.0170	0.0109	0.0075	0.0055	0.0042
1.35	0.0379	0.0329	0.0289	0.0255	0.0228	0.0204	0.0184	0.0117	0.0081	0.0060	0.0046
1.40	0.0408	0.0355	0.0311	0.0275	0.0245	0.0220	0.0198	0.0126	0.0087	0.0064	0.0049
1.45	0.0439	0.0381	0.0334	0.0295	0.0263	0.0236	0.0212	0.0135	0.0094	0.0069	0.0053
1.50	0.0470	0.0408	0.0358	0.0316	0.0282	0.0252	0.0228	0.0145	0.0101	0.0074	0.0056
1.55	0.0503	0.0437	0.0383	0.0338	0.0301	0.0270	0.0243	0.0155	0.0107	0.0079	0.0060
1.60	0.0537	0.0466	0.0408	0.0361	0.0321	0.0288	0.0259	0.0165	0.0114	0.0084	0.0064
1.65	0.0572	0.0496	0.0435	0.0384	0.0342	0.0306	0.0276	0.0176	0.0122	0.0089	0.0068
1.70	0.0608	0.0527	0.0462	0.0408	0.0363	0.0325	0.0293	0.0187	0.0129	0.0095	0.0073

Thermal overload for cables
ANSI code 49RMS
Tripping curves

Curves for initial heat rise = 100 %

Iph/Ib Ia/Ib	1.15	1.20	1.25	1.30	1.35	1.40	1.45	1.50	1.55	1.60	1.65	1.70	1.75	1.80	1.85	1.90
1.10	1.0531	0.6487	0.4673	0.3629	0.2948	0.2469	0.2113	0.1839	0.1622	0.1446	0.1300	0.1178	0.1074	0.0984	0.0907	0.0839
1.15		1.3203	0.8518	0.6300	0.4977	0.4094	0.3460	0.2984	0.2613	0.2316	0.2073	0.1871	0.1700	0.1555	0.1429	0.1319
1.20			1.5243	1.0152	0.7656	0.6131	0.5093	0.4339	0.3765	0.3314	0.2950	0.2650	0.2400	0.2187	0.2004	0.1846
1.25				1.6886	1.1517	0.8817	0.7138	0.5978	0.5126	0.4472	0.3954	0.3533	0.3185	0.2892	0.2642	0.2427
1.30					1.8258	1.2685	0.9831	0.8030	0.6772	0.5840	0.5118	0.4543	0.4073	0.3682	0.3352	0.3070
1.35						1.9433	1.3705	1.0729	0.8830	0.7492	0.6491	0.5713	0.5088	0.4576	0.4148	0.3785
1.40							2.0460	1.4610	1.1536	0.9555	0.8149	0.7092	0.6263	0.5596	0.5047	0.4586
1.45								2.1371	1.5422	1.2267	1.0218	0.8755	0.7647	0.6776	0.6072	0.5489
1.50									2.2188	1.6159	1.2935	1.0829	0.9316	0.8165	0.7257	0.6519
1.55										2.2930	1.6832	1.3550	1.1394	0.9838	0.8650	0.7708
1.60											2.3609	1.7452	1.4121	1.1921	1.0327	0.9106
1.65												2.4233	1.8027	1.4652	1.2415	1.0787
1.70													2.4813	1.8563	1.5150	1.2879

Iph/Ib Ia/Ib	1.95	2.00	2.20	2.40	2.60	2.80	3.00	3.20	3.40	3.60	3.80	4.00	4.20	4.40	4.60	4.80
1.10	0.0779	0.0726	0.0562	0.0451	0.0371	0.0312	0.0266	0.0230	0.0201	0.0177	0.0157	0.0141	0.0127	0.0115	0.0105	0.0096
1.15	0.1223	0.1137	0.0877	0.0702	0.0576	0.0483	0.0411	0.0355	0.0310	0.0273	0.0243	0.0217	0.0196	0.0177	0.0161	0.0147
1.20	0.1708	0.1586	0.1217	0.0970	0.0795	0.0665	0.0566	0.0488	0.0426	0.0375	0.0333	0.0298	0.0268	0.0243	0.0221	0.0202
1.25	0.2240	0.2076	0.1584	0.1258	0.1028	0.0858	0.0729	0.0628	0.0547	0.0482	0.0428	0.0382	0.0344	0.0311	0.0283	0.0259
1.30	0.2826	0.2614	0.1981	0.1566	0.1276	0.1063	0.0902	0.0776	0.0676	0.0594	0.0527	0.0471	0.0424	0.0383	0.0348	0.0318
1.35	0.3474	0.3204	0.2410	0.1897	0.1541	0.1281	0.1085	0.0932	0.0811	0.0713	0.0632	0.0564	0.0507	0.0458	0.0417	0.0380
1.40	0.4194	0.3857	0.2877	0.2253	0.1823	0.1512	0.1278	0.1097	0.0953	0.0837	0.0741	0.0661	0.0594	0.0537	0.0488	0.0445
1.45	0.4999	0.4581	0.3384	0.2635	0.2125	0.1758	0.1483	0.1271	0.1103	0.0967	0.0856	0.0763	0.0686	0.0619	0.0562	0.0513
1.50	0.5907	0.5390	0.3938	0.3046	0.2446	0.2018	0.1699	0.1454	0.1260	0.1104	0.0976	0.0870	0.0781	0.0705	0.0640	0.0584
1.55	0.6940	0.6302	0.4545	0.3491	0.2790	0.2295	0.1928	0.1646	0.1425	0.1247	0.1102	0.0982	0.0881	0.0795	0.0721	0.0657
1.60	0.8134	0.7340	0.5213	0.3971	0.3159	0.2589	0.2169	0.1849	0.1599	0.1398	0.1234	0.1098	0.0984	0.0888	0.0805	0.0734
1.65	0.9536	0.8537	0.5952	0.4492	0.3553	0.2901	0.2425	0.2063	0.1781	0.1555	0.1372	0.1220	0.1093	0.0985	0.0893	0.0814
1.70	1.1221	0.9943	0.6776	0.5059	0.3977	0.3234	0.2695	0.2288	0.1972	0.1720	0.1516	0.1347	0.1206	0.1086	0.0984	0.0897

Iph/Ib Ia/Ib	5.00	5.50	6.00	6.50	7.00	7.50	8.00	8.50	9.00	9.50	10.00	12.50	15.00	17.50	20.00
1.10	0.0088	0.0072	0.0060	0.0051	0.0044	0.0038	0.0033	0.0030	0.0026	0.0024	0.0021	0.0014	0.0009	0.0007	0.0005
1.15	0.0135	0.0111	0.0093	0.0078	0.0067	0.0059	0.0051	0.0045	0.0040	0.0036	0.0033	0.0021	0.0014	0.0011	0.0008
1.20	0.0185	0.0152	0.0127	0.0107	0.0092	0.0080	0.0070	0.0062	0.0055	0.0049	0.0045	0.0028	0.0020	0.0014	0.0011
1.25	0.0237	0.0194	0.0162	0.0137	0.0118	0.0102	0.0090	0.0079	0.0071	0.0063	0.0057	0.0036	0.0025	0.0018	0.0014
1.30	0.0292	0.0239	0.0199	0.0169	0.0145	0.0126	0.0110	0.0097	0.0087	0.0078	0.0070	0.0045	0.0031	0.0023	0.0017
1.35	0.0349	0.0285	0.0238	0.0201	0.0173	0.0150	0.0131	0.0116	0.0103	0.0093	0.0083	0.0053	0.0037	0.0027	0.0021
1.40	0.0408	0.0334	0.0278	0.0235	0.0202	0.0175	0.0154	0.0136	0.0121	0.0108	0.0097	0.0062	0.0043	0.0031	0.0024
1.45	0.0470	0.0384	0.0320	0.0271	0.0232	0.0202	0.0177	0.0156	0.0139	0.0124	0.0112	0.0071	0.0049	0.0036	0.0028
1.50	0.0535	0.0437	0.0364	0.0308	0.0264	0.0229	0.0200	0.0177	0.0157	0.0141	0.0127	0.0081	0.0056	0.0041	0.0031
1.55	0.0602	0.0491	0.0409	0.0346	0.0297	0.0257	0.0225	0.0199	0.0177	0.0158	0.0143	0.0091	0.0063	0.0046	0.0035
1.60	0.0672	0.0548	0.0456	0.0386	0.0330	0.0286	0.0251	0.0221	0.0197	0.0176	0.0159	0.0101	0.0070	0.0051	0.0039
1.65	0.0745	0.0607	0.0505	0.0427	0.0365	0.0317	0.0277	0.0245	0.0218	0.0195	0.0176	0.0112	0.0077	0.0057	0.0043
1.70	0.0820	0.0668	0.0555	0.0469	0.0402	0.0348	0.0305	0.0269	0.0239	0.0214	0.0193	0.0122	0.0085	0.0062	0.0047

Thermal overload for capacitors
ANSI code 49RMS

Protection of equipment against thermal damage due to overloads.

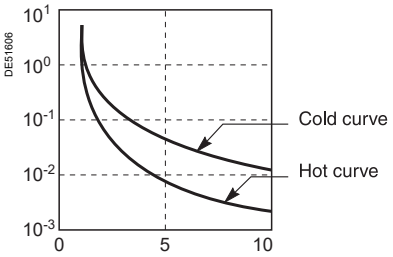

Tripping curves.

Description

This function is used to protect capacitor banks with or without anti-harmonic inductors against overloads, based on the measurement of the current drawn.

The current measured by the thermal protection is an RMS 3-phase current which takes into account harmonics up to number 13.
The highest current of the three phases I1, I2 and I3, subsequently called phase current Iph, is used to calculate the heat rise:

$$Iph = max(I1,I2,I3)$$

Operation curve

The protection function gives a tripping order when the current drawn is greater than the overload current, with respect to the rated current of the sequence.
The tripping time is set by assigning a hot tripping time to a setting current. This setting is used to calculate a time factor:

$$C = \frac{1}{\ln\left(\frac{\left(\frac{Is}{Ib}\right)^2 - 1}{\left(\frac{Is}{Ib}\right)^2 - \left(\frac{Itrip}{Ib}\right)^2}\right)}$$

where ln: natural logarithm.

The tripping time with an initial heat rise of 0 % is then given by:

$$t = C \times \ln\left(\frac{\left(\frac{Iph}{Ib}\right)^2}{\left(\frac{Iph}{Ib}\right)^2 - \left(\frac{Itrip}{Ib}\right)^2}\right) \times Ts$$

where ln: natural logarithm.

$$= k \times Ts$$

The tripping time with an intial heat rise of 100 % is then given by:

$$t = C \times \ln\left(\frac{\left(\frac{Iph}{Ib}\right)^2 - 1}{\left(\frac{Iph}{Ib}\right)^2 - \left(\frac{Itrip}{Ib}\right)^2}\right) \times Ts$$

where ln: natural logarithm.

$$= k \times Ts$$

The tripping curve tables give the values of k for an inital heat rise from 0 % to 100 %.
The current heat rise is saved in the event of an auxiliary power failure.

Block diagram

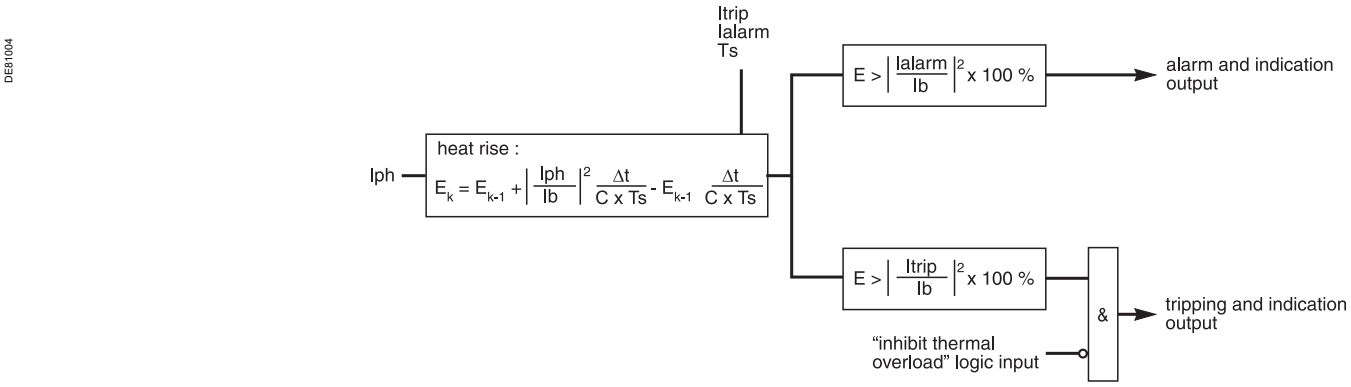

Thermal overload for capacitors
ANSI code 49RMS

User information

The following information is available for the user:
- heat rise
- time before tripping (with constant current).

Characteristics

Settings			
Alarm current Ialarm			
Setting range	1.05 to 1.70 Ib		
Accuracy (1)	±2 %		
Resolution	1 A		
Tripping current Itrip			
Setting range	1.05 to 1.70 Ib		
Accuracy (1)	±2 %		
Resolution	1 A		
Setting current Is			
Setting range	1.02 Itrip to 2 Ib		
Accuracy (1)	±2 %		
Resolution	1 A		
Setting time Ts			
Setting range	1 to 2000 minutes (range varies depending on the tripping and setting currents)		
Resolution	1 mn		
Characteristic times			
Operation time accuracy	±2 % or ±2 s		
Inputs			
Designation	**Syntax**	**Equations**	
Protection reset	P49RMS_1_101	■	
Protection inhibition	P49RMS_1_113	■	
Outputs			
Designation	**Syntax**	**Equations**	**Matrix**
Delayed output	P49RMS _1_3	■	■
Alarm	P49RMS _1_10	■	■
Inhibit closing	P49RMS _1_11	■	■
Protection inhibited	P49RMS _1_16	■	
Hot state	P49RMS _1_18	■	

(1) *Under reference conditions (IEC 60255-6).*

Thermal overload for capacitors
ANSI code 49RMS

Curves for initial heat rise = 0 %

Is = 1.2 Ib

Iph/Ibseq Itrip/Ibseq	1.10	1.15	1.20	1.25	1.30	1.35	1.40	1.45	1.50	1.55	1.60	1.65	1.70	1.75	1.80
1.05	9.1282	6.7632	5.4705	4.6108	3.9841	3.5018	3.1171	2.8020	2.5389	2.3157	2.1239	1.9574	1.8115	1.6828	1.5683
1.10		3.7989	2.8277	2.2954	1.9404	1.6809	1.4809	1.3209	1.1896	1.0798	0.9865	0.9061	0.8362	0.7749	0.7207
1.15			1.8980	1.4189	1.1556	0.9796	0.8507	0.7510	0.6712	0.6056	0.5506	0.5037	0.4634	0.4282	0.3973

Is = 1.2 Ib

Iph/Ibseq Itrip/Ibseq	1.85	1.90	1.95	2.00	2.20	2.40	2.60	2.80	3.00	3.20	3.40	3.60	3.80	4.00
1.05	1.4660	1.3741	1.2911	1.2158	0.9747	0.8011	0.6713	0.5714	0.4927	0.4295	0.3779	0.3352	0.2995	0.2692
1.10	0.6725	0.6293	0.5905	0.5554	0.4435	0.3635	0.3040	0.2584	0.2226	0.1939	0.1704	0.1511	0.1349	0.1212
1.15	0.3699	0.3456	0.3237	0.3040	0.2417	0.1976	0.1649	0.1399	0.1204	0.1047	0.0920	0.0815	0.0728	0.0653

Is = 1.3 Ib

Iph/Ibseq Itrip/Ibseq	1.10	1.15	1.20	1.25	1.30	1.35	1.40	1.45	1.50	1.55	1.60	1.65	1.70	1.75	1.80
1.05	15.0540	11.1530	9.0217	7.6039	6.5703	5.7750	5.1405	4.6210	4.1871	3.8189	3.5027	3.2281	2.9875	2.7752	2.5864
1.10		6.7905	5.0545	4.1030	3.4684	3.0047	2.6470	2.3611	2.1265	1.9301	1.7633	1.6197	1.4948	1.3852	1.2883
1.15			3.9779	2.9738	2.4220	2.0530	1.7829	1.5740	1.4067	1.2692	1.1539	1.0557	0.9711	0.8974	0.8327
1.20				2.5077	1.8824	1.5378	1.3070	1.1375	1.0063	0.9010	0.8143	0.7415	0.6794	0.6257	0.5790
1.25					1.5305	1.1532	0.9449	0.8050	0.7021	0.6223	0.5582	0.5052	0.4607	0.4227	0.3898

Is = 1.3 Ib

Iph/Ibseq Itrip/Ibseq	1.85	1.90	1.95	2.00	2.20	2.40	2.60	2.80	3.00	3.20	3.40	3.60	3.80	4.00
1.05	2.4177	2.2661	2.1292	2.0051	1.6074	1.3211	1.1071	0.9424	0.8126	0.7084	0.6233	0.5529	0.4939	0.4440
1.10	1.2021	1.1249	1.0555	0.9927	0.7927	0.6498	0.5435	0.4619	0.3979	0.3465	0.3047	0.2701	0.2412	0.2167
1.15	0.7753	0.7242	0.6785	0.6372	0.5066	0.4141	0.3456	0.2933	0.2523	0.2195	0.1929	0.1709	0.1525	0.1370
1.20	0.5378	0.5013	0.4688	0.4396	0.3478	0.2834	0.2360	0.1999	0.1717	0.1493	0.1310	0.1160	0.1035	0.0929
1.25	0.3611	0.3358	0.3134	0.2933	0.2309	0.1874	0.1557	0.1316	0.1129	0.0981	0.0860	0.0761	0.0678	0.0609

Is = 1.4 Ib

Iph/Ibseq Itrip/Ibseq	1.10	1.15	1.20	1.25	1.30	1.35	1.40	1.45	1.50	1.55	1.60	1.65	1.70	1.75	1.80
1.05	21.4400	15.8850	12.8490	10.8300	9.3578	8.2251	7.3214	6.5815	5.9634	5.4391	4.9887	4.5976	4.2550	3.9525	3.6837
1.10		9.9827	7.4306	6.0317	5.0988	4.4171	3.8914	3.4710	3.1261	2.8375	2.5922	2.3811	2.1975	2.0364	1.8939
1.15			6.1214	4.5762	3.7270	3.1593	2.7435	2.4222	2.1647	1.9531	1.7757	1.6246	1.4944	1.3810	1.2813
1.20				4.1525	3.1170	2.5464	2.1642	1.8836	1.6664	1.4920	1.3483	1.2278	1.1249	1.0361	0.9587
1.25					2.9310	2.2085	1.8095	1.5416	1.3446	1.1918	1.0689	0.9676	0.8823	0.8095	0.7466
1.30						2.0665	1.5627	1.2839	1.0964	0.9582	0.8508	0.7643	0.6929	0.6327	0.5813
1.35							1.3673	1.0375	0.8546	0.7314	0.6404	0.5696	0.5125	0.4653	0.4254

Is = 1.4 Ib

Iph/Ibseq Itrip/Ibseq	1.85	1.90	1.95	2.00	2.20	2.40	2.60	2.80	3.00	3.20	3.40	3.60	3.80	4.00
1.05	3.4434	3.2275	3.0325	2.8557	2.2894	1.8816	1.5768	1.3422	1.1573	1.0089	0.8877	0.7874	0.7034	0.6323
1.10	1.7672	1.6537	1.5516	1.4593	1.1654	0.9552	0.7989	0.6791	0.5849	0.5094	0.4479	0.3970	0.3545	0.3186
1.15	1.1931	1.1145	1.0440	0.9805	0.7796	0.6372	0.5318	0.4513	0.3882	0.3378	0.2968	0.2629	0.2346	0.2107
1.20	0.8906	0.8302	0.7763	0.7279	0.5760	0.4692	0.3907	0.3310	0.2844	0.2472	0.2170	0.1921	0.1714	0.1538
1.25	0.6916	0.6432	0.6002	0.5618	0.4421	0.3589	0.2981	0.2521	0.2163	0.1878	0.1647	0.1457	0.1299	0.1165
1.30	0.5367	0.4977	0.4634	0.4328	0.3386	0.2738	0.2268	0.1914	0.1640	0.1422	0.1246	0.1102	0.0981	0.0880
1.35	0.3913	0.3617	0.3358	0.3129	0.2431	0.1957	0.1617	0.1361	0.1164	0.1009	0.0883	0.0780	0.0694	0.0622

Thermal overload for capacitors
ANSI code 49RMS

Curves for initial heat rise = 0 %

Is = 2 Ib

Iph/Ibseq Itrip/Ibseq	1.10	1.15	1.20	1.25	1.30	1.35	1.40	1.45	1.50	1.55	1.60	1.65	1.70	1.75	1.80
1.05	69.6380	51.5950	41.7340	35.1750	30.3940	26.7150	23.7800	21.3760	19.3690	17.6660	16.2030	14.9330	13.8200	12.8380	11.9650
1.10		33.9580	25.2760	20.5180	17.3440	15.0260	13.2370	11.8070	10.6340	9.6521	8.8176	8.0995	7.4750	6.9270	6.4425
1.15			22.0350	16.4730	13.4160	11.3720	9.8756	8.7189	7.7922	7.0303	6.3916	5.8479	5.3792	4.9710	4.6123
1.20				16.0520	12.0490	9.8435	8.3659	7.2814	6.4415	5.7674	5.2122	4.7460	4.3485	4.0053	3.7060
1.25					12.4460	9.3782	7.6840	6.5465	5.7100	5.0610	4.5392	4.1087	3.7467	3.4375	3.1703
1.30						10.0300	7.5843	6.2313	5.3211	4.6505	4.1294	3.7096	3.3629	3.0708	2.8210
1.35							8.2921	6.2917	5.1827	4.4353	3.8838	3.4544	3.1081	2.8215	2.5799
1.40								6.9790	5.3124	4.3868	3.7619	3.3000	2.9399	2.6491	2.4081
1.50										5.1152	3.9169	3.2491	2.7969	2.4617	2.1997
1.60												3.8403	2.9564	2.4625	2.1271
1.70														2.8932	2.2383

Is = 2 Ib

Iph/Ibseq Itrip/Ibseq	1.85	1.90	1.95	2.00	2.20	2.40	2.60	2.80	3.00	3.20	3.40	3.60	3.80	4.00
1.05	11.1840	10.4830	9.8495	9.2753	7.4358	6.1115	5.1214	4.3594	3.7590	3.2768	2.8832	2.5574	2.2846	2.0537
1.10	6.0114	5.6254	5.2781	4.9642	3.9642	3.2494	2.7177	2.3099	1.9896	1.7328	1.5235	1.3506	1.2059	1.0836
1.15	4.2947	4.0117	3.7581	3.5295	2.8064	2.2936	1.9142	1.6245	1.3975	1.2159	1.0683	0.9464	0.8446	0.7586
1.20	3.4426	3.2091	3.0008	2.8138	2.2265	1.8138	1.5104	1.2795	1.0993	0.9555	0.8388	0.7426	0.6624	0.5946
1.25	2.9368	2.7311	2.5486	2.3855	1.8775	1.5240	1.2659	1.0704	0.9184	0.7974	0.6994	0.6187	0.5515	0.4949
1.30	2.6048	2.4157	2.2489	2.1007	1.6433	1.3288	1.1007	0.9289	0.7958	0.6901	0.6047	0.5346	0.4762	0.4271
1.35	2.3729	2.1935	2.0365	1.8978	1.4745	1.1871	0.9804	0.8257	0.7061	0.6116	0.5354	0.4730	0.4210	0.3774
1.40	2.2046	2.0301	1.8787	1.7459	1.3461	1.0785	0.8878	0.7459	0.6369	0.5509	0.4817	0.4252	0.3782	0.3388
1.50	1.9875	1.8112	1.6620	1.5337	1.1600	0.9190	0.7509	0.6276	0.5337	0.4603	0.4016	0.3538	0.3143	0.2812
1.60	1.8779	1.6825	1.5240	1.3920	1.0256	0.8008	0.6484	0.5386	0.4560	0.3920	0.3411	0.2998	0.2659	0.2376
1.70	1.8713	1.6215	1.4355	1.2893	0.9143	0.7007	0.5610	0.4625	0.3895	0.3335	0.2894	0.2538	0.2246	0.2004

Thermal overload for capacitors
ANSI code 49RMS

Curves for initial heat rise = 100 %

Is = 1.2 Ib

Iph/Ibseq Itrip/Ibseq	1.10	1.15	1.20	1.25	1.30	1.35	1.40	1.45	1.50	1.55	1.60	1.65	1.70	1.75	1.80
1.05	2.5249	1.4422	1.0000	0.7585	0.6064	0.5019	0.4258	0.3679	0.3226	0.2862	0.2563	0.2313	0.2102	0.1922	0.1766
1.10		1.624	1.000	0.720	0.559	0.454	0.381	0.3257	0.2835	0.2501	0.2229	0.2004	0.1816	0.1655	0.1518
1.15			1.000	0.645	0.477	0.377	0.310	0.2621	0.2260	0.1979	0.1754	0.1570	0.1417	0.1288	0.1177

Is = 1.2 Ib

Iph/Ibseq Itrip/Ibseq	1.85	1.90	1.95	2.00	2.20	2.40	2.60	2.80	3.00	3.20	3.40	3.60	3.80	4.00
1.05	0.1630	0.1511	0.1405	0.1311	0.1020	0.0821	0.0677	0.0569	0.0486	0.0421	0.0368	0.0325	0.0289	0.0259
1.10	0.1398	0.1293	0.1201	0.1119	0.0867	0.0696	0.0573	0.0481	0.0410	0.0354	0.0310	0.0273	0.0243	0.0217
1.15	0.1082	0.0999	0.0926	0.0861	0.0664	0.0531	0.0436	0.0366	0.0312	0.0269	0.0235	0.0207	0.0184	0.0165

Is = 1.3 Ib

Iph/Ibseq Itrip/Ibseq	1.10	1.15	1.20	1.25	1.30	1.35	1.40	1.45	1.50	1.55	1.60	1.65	1.70	1.75	1.80
1.05	4.1639	2.3784	1.6492	1.2509	1.0000	0.8276	0.7021	0.6068	0.5320	0.4719	0.4226	0.3815	0.3467	0.3170	0.2913
1.10		2.9020	1.7875	1.2878	1.0000	0.8123	0.6802	0.5823	0.5068	0.4470	0.3984	0.3583	0.3246	0.2959	0.2713
1.15			2.0959	1.3521	1.0000	0.7901	0.6498	0.5493	0.4737	0.4148	0.3676	0.3291	0.2970	0.2699	0.2468
1.20				1.5014	1.0000	0.7541	0.6039	0.5017	0.4274	0.3708	0.3264	0.2905	0.2610	0.2364	0.2154
1.25					1.0000	0.6820	0.5222	0.4227	0.3541	0.3036	0.2648	0.2341	0.2092	0.1886	0.1713

Is = 1.3 Ib

Iph/Ibseq Itrip/Ibseq	1.85	1.90	1.95	2.00	2.20	2.40	2.60	2.80	3.00	3.20	3.40	3.60	3.80	4.00
1.05	0.2688	0.2491	0.2317	0.2162	0.1682	0.1354	0.1117	0.0939	0.0802	0.0694	0.0607	0.0535	0.0476	0.0426
1.10	0.2499	0.2311	0.2146	0.2000	0.1550	0.1243	0.1023	0.0859	0.0733	0.0633	0.0554	0.0488	0.0434	0.0389
1.15	0.2268	0.2094	0.1941	0.1805	0.1393	0.1114	0.0915	0.0767	0.0653	0.0564	0.0492	0.0434	0.0386	0.0345
1.20	0.1974	0.1819	0.1682	0.1562	0.1199	0.0955	0.0783	0.0655	0.0557	0.0481	0.0419	0.0369	0.0328	0.0293
1.25	0.1565	0.1438	0.1327	0.1230	0.0938	0.0745	0.0609	0.0508	0.0432	0.0372	0.0324	0.0285	0.0253	0.0226

Is = 1.4 Ib

Iph/Ibseq Itrip/Ibseq	1.10	1.15	1.20	1.25	1.30	1.35	1.40	1.45	1.50	1.55	1.60	1.65	1.70	1.75	1.80
1.05	5.9304	3.3874	2.3488	1.7816	1.4243	1.1788	1.0000	0.8642	0.7577	0.6721	0.6019	0.5434	0.4938	0.4515	0.4148
1.10		4.2662	2.6278	1.8931	1.4701	1.1942	1.0000	0.8560	0.7451	0.6571	0.5857	0.5267	0.4771	0.4350	0.3988
1.15			3.2252	2.0806	1.5388	1.2158	1.0000	0.8453	0.7289	0.6383	0.5657	0.5064	0.4570	0.4154	0.3797
1.20				2.4862	1.6559	1.2488	1.0000	0.8307	0.7077	0.6141	0.5405	0.4811	0.4323	0.3914	0.3567
1.25					1.9151	1.3061	1.0000	0.8095	0.6780	0.5814	0.5072	0.4484	0.4007	0.3612	0.3280
1.30						1.4393	1.0000	0.7750	0.6330	0.5339	0.4603	0.4035	0.3581	0.3211	0.2903
1.35							1.0000	0.7053	0.5521	0.4544	0.3855	0.3340	0.2940	0.2618	0.2355

Is = 1.4 Ib

Iph/Ibseq Itrip/Ibseq	1.85	1.90	1.95	2.00	2.20	2.40	2.60	2.80	3.00	3.20	3.40	3.60	3.80	4.00
1.05	0.3829	0.3548	0.3300	0.3079	0.2396	0.1928	0.1590	0.1337	0.1142	0.0988	0.0864	0.0762	0.0678	0.0607
1.10	0.3673	0.3398	0.3155	0.2940	0.2278	0.1828	0.1505	0.1263	0.1078	0.0931	0.0814	0.0718	0.0638	0.0571
1.15	0.3490	0.3222	0.2986	0.2778	0.2143	0.1714	0.1408	0.1180	0.1005	0.0868	0.0758	0.0668	0.0593	0.0531
1.20	0.3269	0.3011	0.2786	0.2587	0.1985	0.1582	0.1296	0.1085	0.0923	0.0796	0.0694	0.0611	0.0543	0.0486
1.25	0.2997	0.2753	0.2541	0.2355	0.1796	0.1426	0.1165	0.0973	0.0827	0.0712	0.0621	0.0546	0.0485	0.0433
1.30	0.2643	0.2420	0.2228	0.2060	0.1561	0.1235	0.1006	0.0838	0.0711	0.0612	0.0533	0.0468	0.0415	0.0371
1.35	0.2135	0.1948	0.1788	0.1649	0.1240	0.0976	0.0793	0.0659	0.0558	0.0480	0.0417	0.0367	0.0325	0.0290

Thermal overload for capacitors
ANSI code 49RMS

Curves for initial heat rise = 100 %

Is = 2 Ib

Iph/Ibseq Itrip/Ibseq	1.10	1.15	1.20	1.25	1.30	1.35	1.40	1.45	1.50	1.55	1.60	1.65	1.70	1.75	1.80
1.05	19.2620	11.0020	7.6288	5.7866	4.6259	3.8286	3.2480	2.8069	2.4611	2.1831	1.9550	1.7648	1.6039	1.4663	1.3473
1.10		14.5120	8.9388	6.4398	5.0007	4.0622	3.4016	2.9118	2.5344	2.2351	1.9923	1.7915	1.6230	1.4797	1.3565
1.15			11.6100	7.4893	5.5392	4.3766	3.5996	3.0427	2.6238	2.2975	2.0364	1.8228	1.6451	1.4951	1.3669
1.20				9.6105	6.4010	4.8272	3.8656	3.2112	2.7355	2.3737	2.0892	1.8597	1.6709	1.5129	1.3788
1.25					8.1323	5.5465	4.2465	3.4375	2.8792	2.4688	2.1537	1.9041	1.7014	1.5337	1.3927
1.30						6.9855	4.8534	3.7614	3.0722	2.5911	2.2342	1.9582	1.7380	1.5583	1.4088
1.35							6.0646	4.2771	3.3484	2.7556	2.3380	2.0258	1.7828	1.5879	1.4280
1.40								5.3051	3.7883	2.9911	2.4776	2.1131	1.8388	1.6241	1.4511
1.50										4.1166	2.9979	2.3998	2.0090	1.7283	1.5149
1.60												3.2166	2.3778	1.9239	1.6242
1.70														2.4956	1.8670

Is = 2 Ib

Iph/Ibseq Itrip/Ibseq	1.85	1.90	1.95	2.00	2.20	2.40	2.60	2.80	3.00	3.20	3.40	3.60	3.80	4.00
1.05	1.2436	1.1525	1.0718	1.0000	0.7783	0.6262	0.5165	0.4343	0.3709	0.3209	0.2806	0.2476	0.2202	0.1972
1.10	1.2495	1.1559	1.0733	1.0000	0.7750	0.6217	0.5118	0.4297	0.3666	0.3168	0.2768	0.2441	0.2170	0.1943
1.15	1.2562	1.1597	1.0750	1.0000	0.7713	0.6169	0.5066	0.4247	0.3618	0.3124	0.2727	0.2404	0.2136	0.1911
1.20	1.2638	1.1640	1.0768	1.0000	0.7673	0.6115	0.5010	0.4192	0.3567	0.3076	0.2683	0.2363	0.2099	0.1877
1.25	1.2725	1.1690	1.0790	1.0000	0.7628	0.6057	0.4949	0.4133	0.3511	0.3025	0.2636	0.2320	0.2059	0.1841
1.30	1.2826	1.1747	1.0814	1.0000	0.7578	0.5992	0.4882	0.4069	0.3451	0.2969	0.2585	0.2274	0.2017	0.1802
1.35	1.2945	1.1813	1.0842	1.0000	0.7522	0.5920	0.4808	0.3998	0.3386	0.2910	0.2531	0.2224	0.1971	0.1760
1.40	1.3085	1.1891	1.0874	1.0000	0.7459	0.5841	0.4728	0.3921	0.3315	0.2844	0.2471	0.2170	0.1922	0.1715
1.50	1.3463	1.2094	1.0958	1.0000	0.7306	0.5652	0.4539	0.3744	0.3152	0.2697	0.2337	0.2048	0.1811	0.1614
1.60	1.4070	1.2406	1.1082	1.0000	0.7102	0.5410	0.4303	0.3527	0.2955	0.2520	0.2178	0.1904	0.1681	0.1496
1.70	1.5237	1.2953	1.1286	1.0000	0.6816	0.5089	0.4000	0.3253	0.2711	0.2302	0.1983	0.1730	0.1524	0.1355

Thermal overload for machines
ANSI code 49RMS

Operation

This function is used to protect a transformer against overloads, based on the measurement of the current taken.
IEC standard 60076-2 proposes 2 thermal models for evaluating the winding thermal capacity used during an overload, depending on whether the transformer is dry-type or immersed.

Taking account of harmonics
The equivalent current Ieq measured by the transformer thermal overload protection is the highest of the phase rms currents (the rms current takes account of harmonic numbers up to 13).

Taking account of 2 operating conditions
The choice between thermal sets 1 and 2 is made by the "switching of thermal settings" logic input. This means you can have thermal set 1 for normal transformer operation and thermal set 2 for unusual transformer operation.

Dry-type transformer

For dry-type transformers, the thermal model used in the Sepam relay conforms to standard IEC 60076-12 (with 1 time constant).

Block diagram

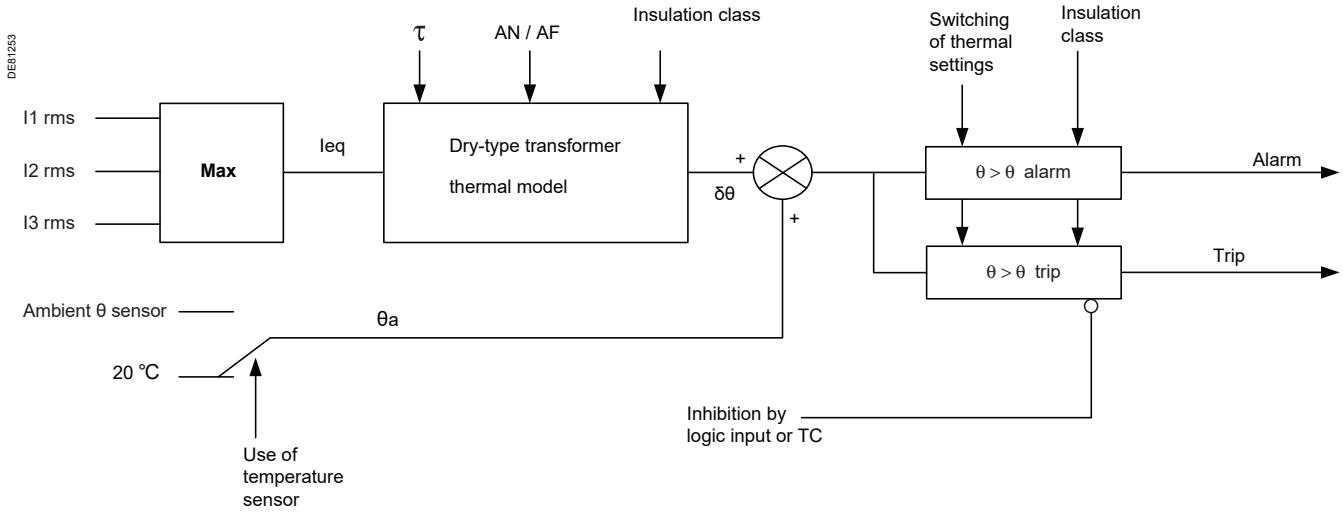

Dry-type transformer thermal model
The thermal limit for dry-type transformers is determined by the thermal limit for insulating components in order to avoid damaging them. The table below defines the maximum permissible temperature and the winding temperature gradient according to the insulation class:

Insulation class (°C)	Gradient $\Delta\theta n$	Maximum permissible winding temperature θ_{max}
105 (A)	75 °C (67 °F)	130 °C (266 °F)
120 (E)	90 °C (194 °F)	145 °C (293 °F)
130 (B)	100 °C (212 °F)	155 °C (311 °F)
155 (F)	125 °C (257 °F)	180 °C (356 °F)
180 (H)	150 °C (302 °F)	205 °C (401 °F)
200	170 °C (338 °F)	225 °C (437 °F)
220	190 °C (374 °F)	245 °C (473 °F)

The winding maximum permissible thermal capacity used equals:
$\theta_{max} - \theta_a$
Where:
θ_a : ambient temperature (rated value equals 20 °C or 68 °F)

$\Delta\theta n$: temperature gradient at rated current Ib
θ_{max} : insulating component maximum permissible temperature according to the insulation class

Thermal overload for transformers
ANSI code 49RMS

The temperature build-up $\delta\theta$ in the dry-type transformer winding is calculated as follows:

$$\mathbf{Ieq \geq 5\ \%\ Ib}: \delta\theta_{\mathbf{n}} = \delta\theta_{\mathbf{n-1}} + \left[\Delta\theta\mathbf{n} \cdot \left(\frac{\mathbf{I_{eq}}}{\mathbf{Ib}}\right)^{\mathbf{q}} - \delta\theta_{\mathbf{n-1}}\right] \cdot \frac{\mathbf{dt}}{\tau}$$

$$\mathbf{Ieq < 5\ \%\ Ib}: \delta\theta_{\mathbf{n}} = \delta\theta_{\mathbf{n-1}} \cdot \left(\mathbf{1} - \frac{\mathbf{dt}}{\tau}\right)$$

Where:
τ : dry-type transformer time constant
q : equals 1.6 for transformers with natural cooling (AN)
equals 2 for transformers with forced cooling (AF)

The protection trips when the temperature build-up $\delta\theta$ in the winding reaches $\theta_{\mathbf{max}} - \theta_{\mathbf{a}}$.

Evaluating the time constant
The thermal protection function protects the MV winding as well as the LV winding. Therefore the time constant τ corresponds to the lowest value of the MV winding and LV winding time constants.

The time constant is evaluated, for each winding, according to standard IEC 60076-12 as follows:

$$\tau = \frac{\mathbf{C} \cdot (\Delta\theta_{\mathbf{n}} - \theta_{\mathbf{e}})}{\mathbf{Pr}}$$

Where:
Pr : total winding loss in Watts
$\mathbf{C}$: winding thermal capacity in Watts min, given by the winding material:
■ Aluminum: 15 times weight of Al conductor (kg) + 24.5 times weight of epoxy and other insulating component (kg)
■ Copper: 6.42 times weight of Cu conductor (kg) + 24.5 times weight of epoxy and other insulating component (kg)
$\theta_{\mathbf{e}}$: contribution of the core to the thermal capacity used:
■ 5 °C (41 °F) for MV winding
■ 25 °C (77 °F) for LV winding

Example of a class B dry-type transformer:
Regardless of the winding material, the LV winding has the lowest time constant.

The following graph gives the values of the time constant τ for different 20 kV / 410 V dry-type transformer power ratings:

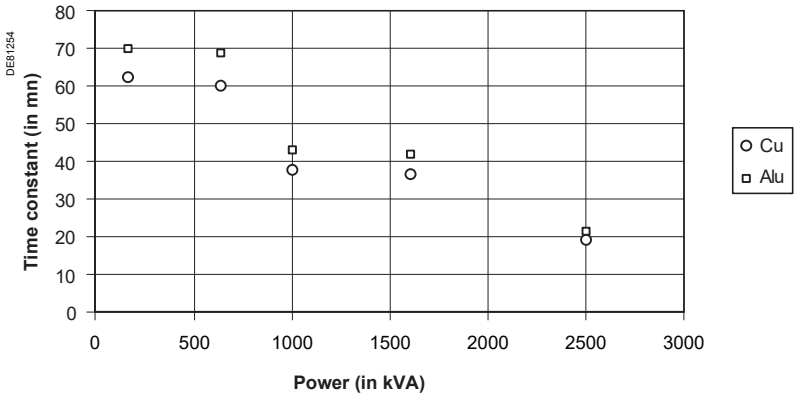

20 kV / 410 V dry-type transformer time constant.

Saving the thermal capacity used
On loss of the auxiliary power supply, the winding thermal capacity used is saved.

Operating information
The following information is available to the operator:
- the winding relative thermal capacity used E as a %: $\mathbf{E_k} = \mathbf{100} \cdot \frac{\theta_k - \theta a}{\Delta\theta_n}$
- the time before tripping in minutes (at constant current)

Accounting for ambient temperature
The characteristics of dry-type transformers are defined for an ambient temperature of 20 °C (68 °F). When the Sepam is equipped with the temperature sensor module option, the ambient temperature is measured by sensor no. 8 and added to the winding temperature.

Thermal overload for transformers
ANSI code 49RMS

Characteristics

Settings			
Measurement origin			
Setting range	I1, I2, I3		
Choice of transformer or thermal model			
Setting range	Dry-type transformer		
	Generic model(1)		
Choice of transformer type			
Setting range	Natural ventilation (AN)		
	Forced ventilation (AF)		
Insulation class			
Setting range	105 (A)		
	120 (E)		
	130 (B)		
	155 (F)		
	180 (H)		
	200		
	220		
Alarm set point (θ alarm)			
Setting range	class 105: 95 °C to 130 °C (203 °F to 266 °F)		
	class 120: 110 °C to 145 °C (230 °F to 293 °F)		
	class 130: 120 °C to 155 °C (248 °F to 311 °F)		
	class 155: 145 °C to 180 °C (293 °F to 356 °F)		
	class 180: 170 °C to 205 °C (338 °F to 401 °F)		
	class 200: 190 °C to 225 °C (374 °F to 437 °F)		
	class 220: 210 °C to 245 °C (410 °F to 473 °F)		
Resolution	1 °C (1 °F)		
Tripping set point (θ trip)			
Setting range	class 105: 95 °C to 130 °C (203 °F to 266 °F)		
	class 120: 110 °C to 145 °C (230 °F to 293 °F)		
	class 130: 120 °C to 155 °C (248 °F to 311 °F)		
	class 155: 145 °C to 180 °C (293 °F to 356 °F)		
	class 180: 170 °C to 205 °C (338 °F to 401 °F)		
	class 200: 190 °C to 225 °C (374 °F to 437 °F)		
	class 220: 210 °C to 245 °C (410 °F to 473 °F)		
Resolution	1 °C (1 °F)		
Transformer time constant (τ)			
Setting range	1 min to 600 min		
Resolution	1 min		
Accounting for ambient temperature			
Setting range	yes / no		
Characteristic times			
Operating time accuracy	±2 % or ±1 s		
Inputs			
Designation	**Syntax**	**Equations**	
Reset protection	P49RMS_1_101	■	
Inhibit protection	P49RMS_1_113	■	
Outputs			
Designation	**Syntax**	**Equations**	**Matrix**
Time-delayed output	P49RMS _1_3	■	■
Alarm	P49RMS _1_10	■	■
Inhibit closing	P49RMS _1_11	■	■
Protection inhibited	P49RMS _1_16	■	
Hot state	P49RMS _1_18	■	
Thermal overload inhibited	P49RMS_1_32	■	
Zero speed	P49RMS_1_38	■	

(1) *See settings associated with generic thermal overload.*

Thermal overload for transformers
Code ANSI 49RMS

Immersed transformer

For immersed transformers, the thermal model used in the Sepam relay conforms to standard IEC 60076-7 (with 2 time constants).
The thermal limit for immersed transformers is determined by the thermal limit for the oil, to avoid the formation of bubbles that could damage the dielectric strength of the oil.

Block diagram

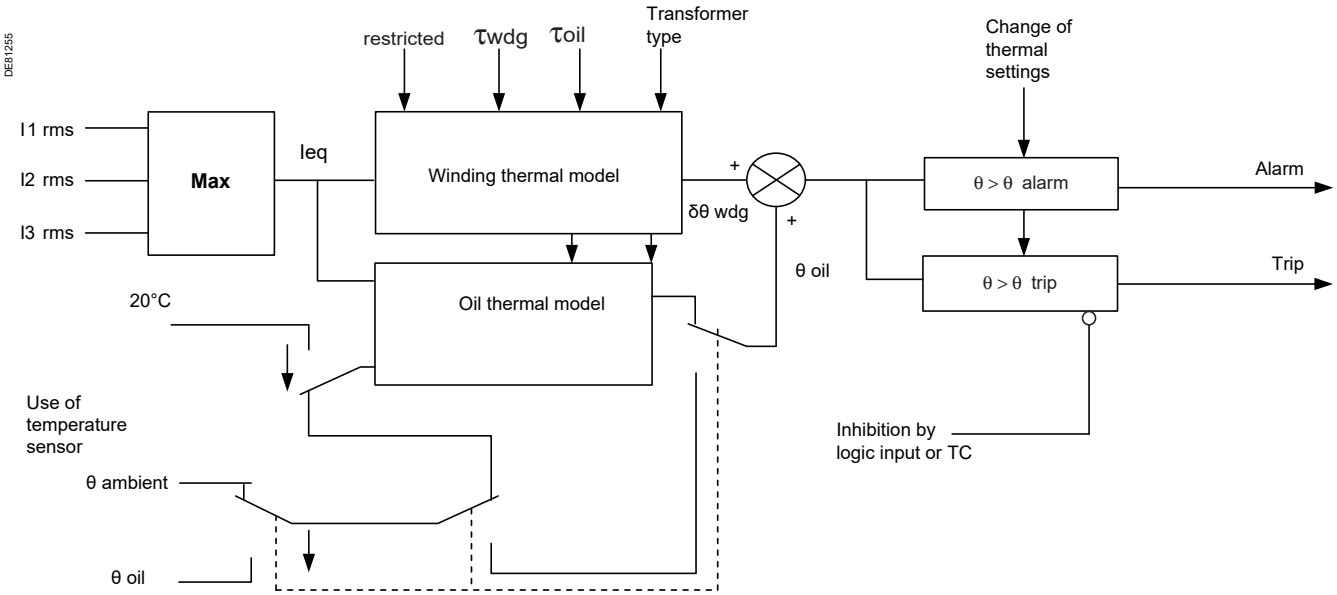

Immersed transformer thermal model

The immersed transformer thermal model takes account of thermal exchanges between the winding and the oil. To this end IEC standard 60076-7 proposes a model for each of the transformer components:
- a thermal model with 2 time constants for the winding
- a thermal model with 1 time constant for the oil.

The winding thermal model transfer function is as follows:

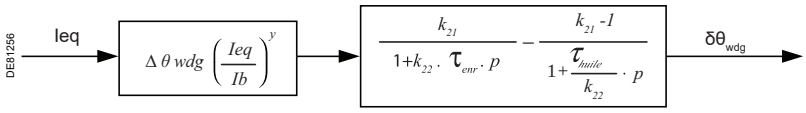

Where $\Delta\theta enr$: winding temperature gradient at current Ib
y : winding thermal capacity used exponent
κ_{21} : thermal exchange coefficient between the winding and the oil
κ_{22} : multiplying factor applied to the time constants
τ_{enr} : winding time constant
τ_{huile} : oil time constant

Thermal overload for transformers
ANSI code 49RMS

IEC standard 60076-7 proposes, depending on the nature of the immersed transformer, the following values κ_{22}

Transformer	κ_{21}		$\Delta\theta$enr	y	τ_{enr}	τ_{huile}
ONAN (distribution)	1	2	23 °C	1,6	4 min	180 min
ONAN (power)	2	2	26 °C	1,3	10 min	210 min
ONAF	2	2	26 °C	1,3	7 min	150 min
OF	1.3	1	22 °C	1,3	7 min	90 min
OD	1	1	29 °C	2	7 min	90 min

Note: *For distribution ONAN and OD transformers, the winding thermal model only reacts with the winding time constant.*

When the winding and oil time constants are given by the immersed transformer manufacturer, the user can enter them in place of the default values proposed by the standard.
For transformers in which the oil flow can be restricted, exchanges between the winding and the oil are worse, so the winding thermal capacity used values are exceeded. In this case coefficient κ_{21} takes the following values:

Transformer	Restricted flow	
	OFF	ON
ONAN (power)	2	3
ONAF	2	3
OF	1,3	1,45

Accounting for ambient temperature
The characteristics of immersed transformers are defined for an ambient temperature of 20 °C (68 °F). When the Sepam is equipped with the temperature sensor module option, the ambient temperature is measured by sensor no. 8 and added to the oil temperature rise.

The oil thermal model transfer function is as follows:

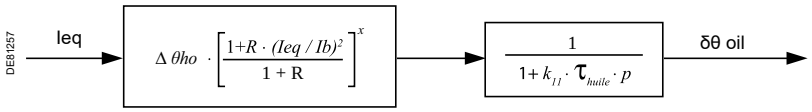

Where $\Delta\theta$ho : oil temperature gradient at current Ib
R : ratio between the on-load losses and the no-load losses
x : oil thermal capacity used exponent
κ_{11} : multiplying factor applied to the oil time constant

Thermal overload for transformers
ANSI code 49RMS

IEC standard 60076-7 proposes, depending on the nature of the immersed transformer, the following values:

Transformer	κ_{11}	$\Delta\theta ho$	x	R
ONAN (distribution)	1	55 °C	0,8	5
ONAN (power)	0,5	52 °C	0,8	6
ONAF	0,5	52 °C	0,8	6
OF	1	56 °C	1	6
OD	1	49 °C	1	6

Taking account of the oil temperature

When the Sepam is equipped with the temperature sensor module option, sensor no. 8 can be assigned to the oil temperature measurement. In this case the oil temperature measurement is substituted for the oil thermal model. The measured oil temperature θ_{oil} is added to the winding temperature rise.

Saving the thermal capacity used

On loss of the auxiliary power supply, both the winding and oil thermal capacity used are saved.

Operating information

The following information is available to the operator:

- the time before tripping in minutes (at constant current)
- the relative thermal capacity used $\mathbf{E_k}$ of the transformer expressed as a %:
  - when the oil temperature is estimated by a calculation:

$$\mathbf{E_k} = \mathbf{100} \cdot \frac{\theta_{\mathbf{k}} - \theta_{\mathbf{ambiant}}}{\Delta\theta\mathbf{enr} + \Delta\theta\mathbf{ho}}$$

  - when the oil temperature is measured:

$$\mathbf{E_k} = \mathbf{100} \cdot \frac{\theta_{\mathbf{k}} - \theta_{\mathbf{huile}}}{\Delta\theta\mathbf{enr}}$$

Thermal overload for transformers
ANSI code 49RMS

Characteristics

Settings		
Measurement origin		
Setting range	I1, I2, I3	
Choice of transformer or thermal model		
Setting range	Immersed transformer	
	ONAN (distribution)	
	ONAN (power)	
	ONAF	
	OD	
	OF	
	Generic model(1)	
Alarm set point (θ alarm)		
Setting range	Immersed transfo:	98 °C to 160 °C (208 °F to 320 °F)
	Dry-type transfo:	95 °C to 245 °C (203 °F to 473 °F)
Resolution	1 °C (1 °F)	
Tripping set point (θ trip)		
Setting range	Immersed transfo:	98 °C to 160 °C (208 °F to 320 °F)
	Dry-type transfo:	95 °C to 245 °C (203 °F to 473 °F)
Resolution	1 °C (1 °F)	
Winding time constant (τ_{enr})		
Setting range	1 mn to 600 mn	
Resolution	1 min	
Oil time constant (τ_{huile})		
Setting range	5 mn to 600 mn	
Resolution	1 min	
Accounting for ambient temperature		
Setting range	yes / no	
Accounting for oil temperature		
Setting range	yes / no	
Restricted oil flow		
Setting range	on / off	

Characteristic times			
Operating time accuracy	±2 % or ±1 s		
Inputs			
Designation	**Syntax**	**Equations**	
Reset protection	P49RMS_1_101	■	
Inhibit protection	P49RMS_1_113	■	
Outputs			
Designation	**Syntax**	**Equations**	**Matrix**
Time-delayed output	P49RMS _1_3	■	■
Alarm	P49RMS _1_10	■	■
Inhibit closing	P49RMS _1_11	■	■
Protection inhibited	P49RMS _1_16	■	
Hot state	P49RMS _1_18	■	
Thermal overload inhibited	P49RMS_1_32	■	
Zero speed	P49RMS_1_38	■	

(1) *See settings associated with generic thermal overload.*

Glossary of transformer type abbreviations:
- AN: air-cooled transformer with natural ventilation
- AF: air-cooled transformer with forced ventilation
- ONAN: transformer immersed in mineral oil, cooled by natural air convection
- ONAF: transformer immersed in oil with forced circulation
- OD: transformer immersed in oil with forced circulation, directed into the windings
- OF: transformer immersed in oil with forced circulation

Thermal overload for motors
ANSI code 49RMS

Operation
This function is used to protect the stator and the rotor of an asynchronous motor.

Block diagram
The stator thermal overload protection is provided by a thermal model with 2 time constants (τlong and τshort).

The rotor excessive starting time thermal protection is provided by an adiabatic thermal model.

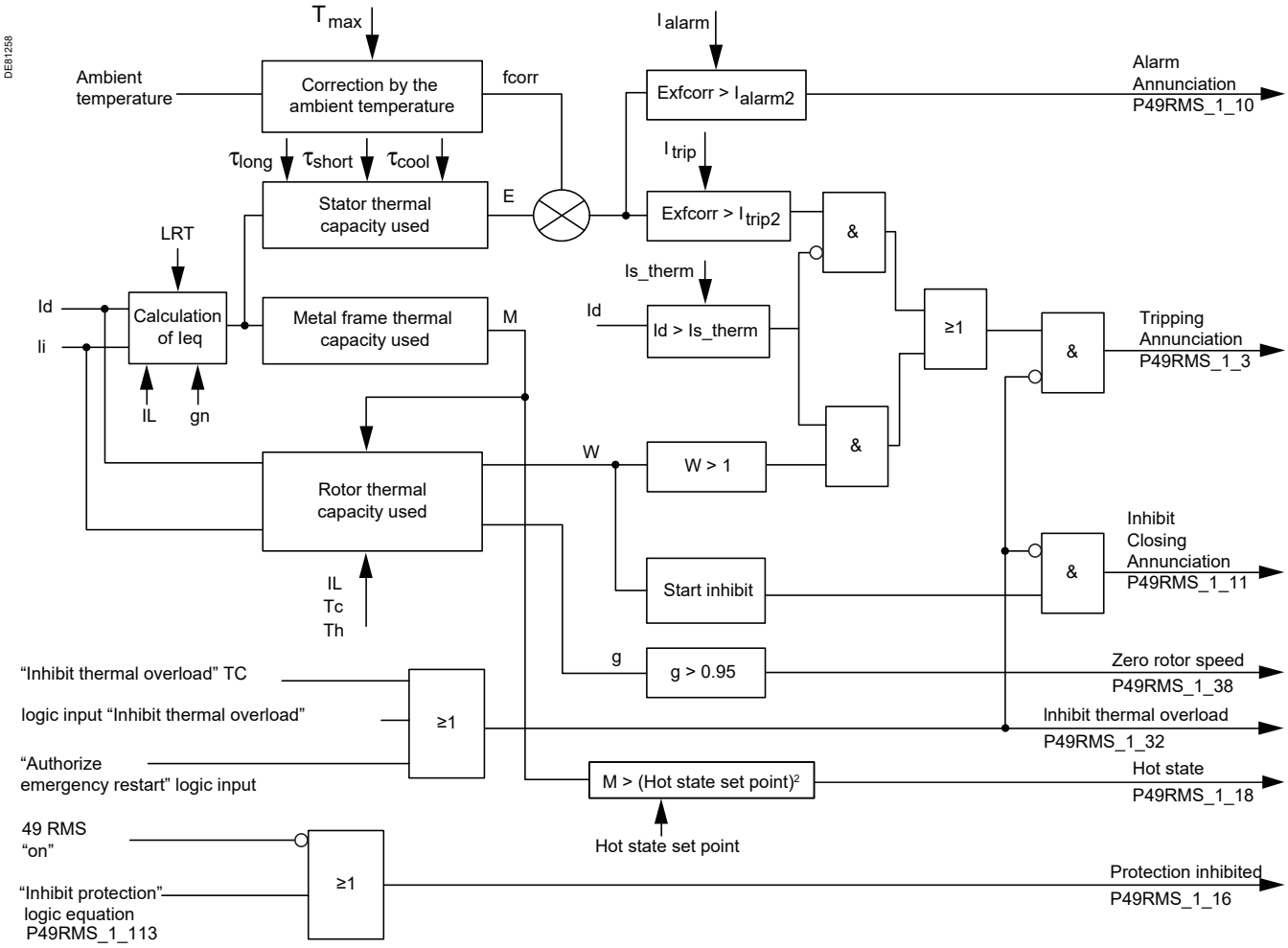

Motor thermal overload
ANSI code 49RMS

Blocking of tripping and closing inhibition
The protection tripping and inhibit closing outputs can be inhibited by:
- an "Inhibit thermal overload" latched logic input
- an "Authorize emergency restart" latched logic input
- an "Inhibit thermal overload" remote control order (TC).

Start inhibit
When the protection trips, circuit breaker closing is inhibited until the rotor thermal capacity used allows another motor start.
This inhibit is grouped together with the "Starts per hour" protection function, and signaled by the message "INHIBIT START".
The inhibit time before starting is authorized can be accessed from:
- the "Machine diagnosis" tab in the SFT2841 software
- the Sepam front panel.

"Hot state" set point
The thermal overload function provides a "hot state" data item used by the starts per hour function (ANSI code 66). It is used to distinguish between cold starts and hot starts. The number of consecutive starts per hour is stated by the motor manufacturer.
Depending on the manufacturer, the previous load current defining hot state varies between 0.6 Ib and Ib. Hence the "hot state" set point can be adjusted to suit the motor characteristics.

Saving the thermal capacity used
On loss of the auxiliary power supply, the thermal capacity used of the rotor W, the stator E and the metal frame M are saved and reused in their current state until the relay is re-energized.

Operating information
The following information can be accessed from the "Machine diagnosis" tab in the SFT2841 software and the Sepam front panel:
- the stator thermal capacity used
- the time before the stator protection trips (at constant current)
- the time before restarting is authorized.

Thermal overload for motors
ANSI code 49RMS

Characteristics

Settings		
Measurement origin		
Setting range	I1, I2, I3	
Choice of thermal model		
Setting range	2 Constant	
	Generic(1)	
Thermal model switching threshold		Is_therm
Setting range	1 to 10 pu of Ib	
Resolution	0.1 pu of Ib	
Stator thermal settings		
Motor thermal capacity used time constant		τ_{long}
Setting range	1 mn to 600 mn	
Resolution	1 mn	
Stator thermal capacity used time constant		τ_{short}
Setting range	1 mn to 60 mn	
Resolution	1 mn	
Cooling time constant		τ_{cool}
Setting range	5 mn to 600 mn	
Resolution	1 mn	
Tripping current set point		Itrip
Setting range	50 % to 173 % of Ib	
Resolution	1 % of Ib	
Alarm current set point		Ialarm
Setting range	50 % to 173 % of Ib	
Resolution	1 % of Ib	
Thermal exchange coefficient between the stator and the motor		α
Setting range	0 to 1	
Resolution	0.01	
Hot state set point		
Setting range	0.5 to 1 pu of Ib	
Resolution	0.01 pu of Ib	
Accounting for ambient temperature		
Setting range	Yes / No	
Maximum equipment temperature (insulation class)		Tmax
Setting range	70 °C to 250 °C or 158 °F to 482 °F	
Resolution	1 °C or 1 °F	
Rotor thermal settings		
Locked rotor amperes		I_L
Setting range	1 to 10 pu of Ib	
Resolution	0.01 pu of Ib	
Locked rotor torque		LRT
Setting range	0.2 to 2 pu of Ib	
Resolution	0.01 pu of Ib	
Locked cold rotor limit time		Tc
Setting range	1 s to 300 s	
Resolution	0.1 s	
Locked hot rotor limit time		Th
Setting range	1 s to 300 s	
Resolution	0.1 s	
Characteristic times		
Operating time accuracy	±2 % or ±1 s	

***(1)** See settings associated with generic thermal overload.*

Inputs		
Designation	**Syntax**	**Equations**
Reset protection	P49RMS_1_101	■
Inhibit protection	P49RMS_1_113	■

Outputs			
Designation	**Syntax**	**Equations**	**Matrix**
Time-delayed output	P49RMS_1_3	■	■
Alarm	P49RMS_1_10	■	■
Inhibit closing	P49RMS_1_11	■	■
Protection inhibited	P49RMS_1_16	■	
Hot state	P49RMS_1_18	■	
Thermal overload inhibited	P49RMS_1_32	■	
Zero speed	P49RMS_1_38	■	

Thermal overload for motors
ANSI code 49RMS

1 Selection of the motor / generic thermal overload protection function
2 Switching threshold between the stator and rotor thermal models (Is_therm)
3 Rotor thermal model parameters
4 Stator thermal model parameters
5 Calculated stator thermal model parameters

Help with parameter setting

The function parameters are set using the motor manufacturer data and the SFT2841 software (49RMS tab in the protection functions).

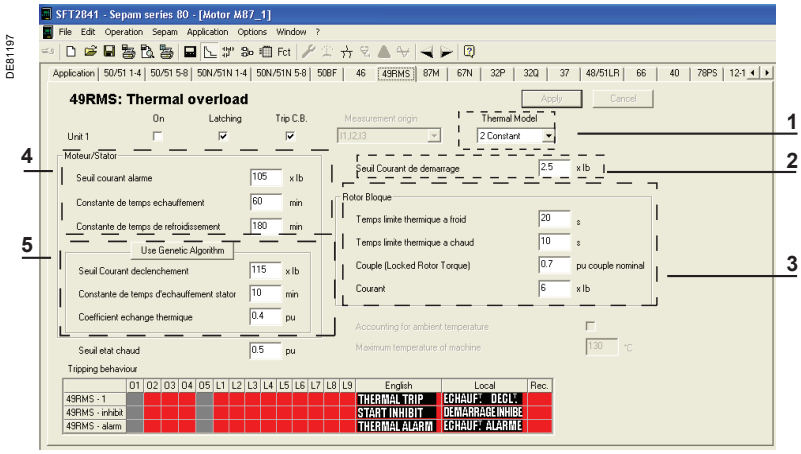

SFT2841 software: 49RMS protection parameter-setting screen for a motor application.

Parameter-setting procedure

1. Select the thermal overload protection function by choosing the "2 Time constants" value from the "Thermal Model" drop-down list.

Note: *The "Generic" value selects the generic thermal overload protection function (see page 135 to set the parameters for this protection function).*

2. Enter the rotor and stator parameters using the motor manufacturer data.
■ Rotor parameters:
□ Locked cold rotor limit time (Tc)
□ Locked hot rotor limit time (Th)
□ Locked rotor torque (LRT)
□ Starting current (IL)
■ Stator parameters:
□ Heating time constant: τlong
□ Cooling time constant: τcool

3. Determine in graphic form the switching threshold between the stator and rotor thermal models (Is_therm).
Depending on the manufacturer curves, there are 2 possible scenarios:
■ If there is any discontinuity between the manufacturer curves (see example on next page), choose Is_therm at the stator breaking point.
■ If there is no discontinuity:
□ Plot the locked cold rotor thermal model curve, between IL and Ib, using the equation below in order to determine Is_therm:
$W(I) = Tc \times (IL / I)^2$
□ Determine the value of Is_therm for which the rotor thermal model (adiabatic) no longer corresponds to the manufacturer's locked cold rotor curve.

Thermal overload for motors
ANSI code 49RMS

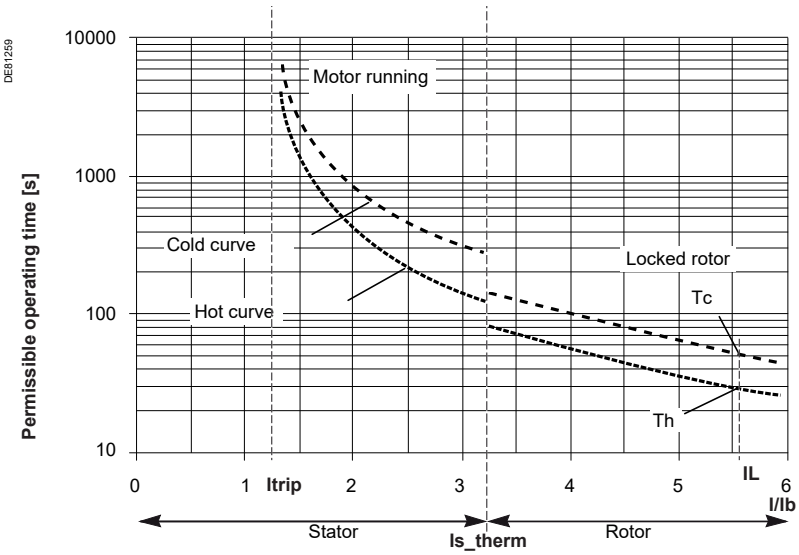

Determination of Is_therm in the case of discontinuous manufacturer curves.

Itrip: permissible continuous current and tripping set point in pu of Ib
IL: starting current in pu of Ib
Tc: Locked cold rotor limit time
Th: Locked hot rotor limit time

4. Determine the following stator parameters:
- Tripping current set point Itrip
- Stator thermal capacity used time constant τshort
- Thermal exchange coefficient α

If these parameters are not available, proceed as follows to calculate them using the SFT2841 software:
4.1. Press the "Use Genetic Algorithm" button which can be accessed from the 49RMS tab in the protection functions.

4.2. Enter 4 typical points found on the manufacturer's cold stator curve.

4.3. Press the "Use Genetic Algorithm" button: the SFT2841 software calculates all 3 parameters.

3

Example of parameter setting no. 1: 3100 kW / 6.3 kV motor

We have the following manufacturer data:

Parameter	Name	Value	Rotor / stator
insulation class		F	-
rated current	Ib	320 A	-
starting current	IL	5.6 Ib	rotor
rated torque	Tn	19,884 Nm	rotor
starting torque	LRT	0.7 Tn	rotor
motor time constant	τlong	90 minutes	stator
cooling constant	τcool	300 minutes	stator
locked cold / hot rotor limit time	Tc / Th	29 s / 16.5 s	rotor
starting time		2.3 s	-
number of consecutive cold (hot) starts		3 (2)	-

Setting the function parameters

1. Selection of "2 Time constants" from the "Thermal Model" drop-down list to select the motor thermal overload protection function.

2. Set the rotor and stator model parameters using the manufacturer data:

Rotor parameter	Name	Value
Locked cold rotor limit time	Tc	29 s
Locked hot rotor limit time	Th	16.5 s
Locked rotor torque	LRT	0.7 pu rated torque
Starting current	IL	5.6 Ib
Stator parameter	**Name**	**Value**
Alarm current set point	Ialarm	< Itrip
Heating time constant	τlong	90 minutes
Cooling time constant	τcool	300 minutes

3. Determination of Is_therm switching threshold between the 2 models:
In this example there is a clear distinction between the rotor and stator manufacturer curves.
Therefore the Is_therm switching threshold at the rotor curve breaking point is selected.
Hence Is_therm = 2.8 Ib

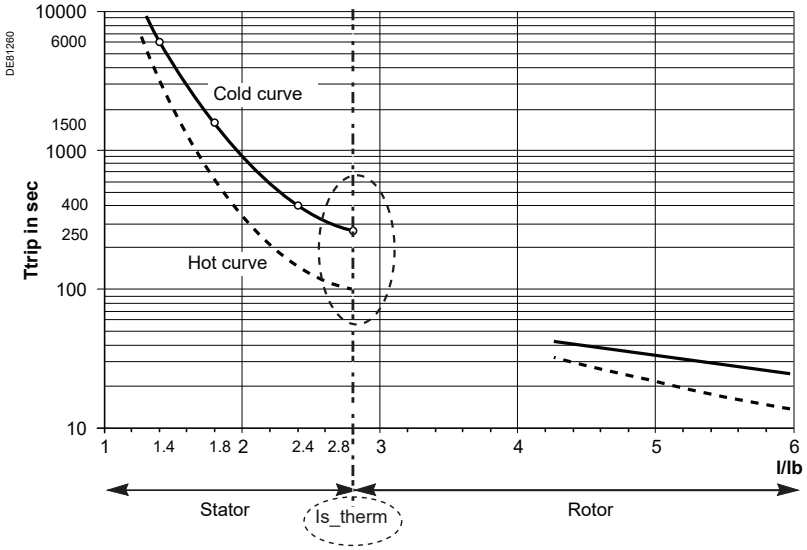

4. Determination of the stator parameters:
For example on the cold stator curve (previous graphic) the following 4 points are selected, spread between Ib and Is_therm:

I/Ib	Ttrip
1.4	6000 s
1.8	1500 s
2.4	400 s
2.8	250 s

The SFT2841 software calculates the missing stator parameters on the basis of these 4 points:

Calculated stator parameter	Name	Value
Tripping current set point	Itrip	1.2 Ib
Stator heating time constant	τshort	5.5 mn
Thermal exchange coefficient between stator and motor	α	0.7

The function parameter setting is complete:

On the graphic below the manufacturer curves are bold lines, whereas the curves generated from the configured model are fine lines.
The function protects the motor beyond its stated characteristics.

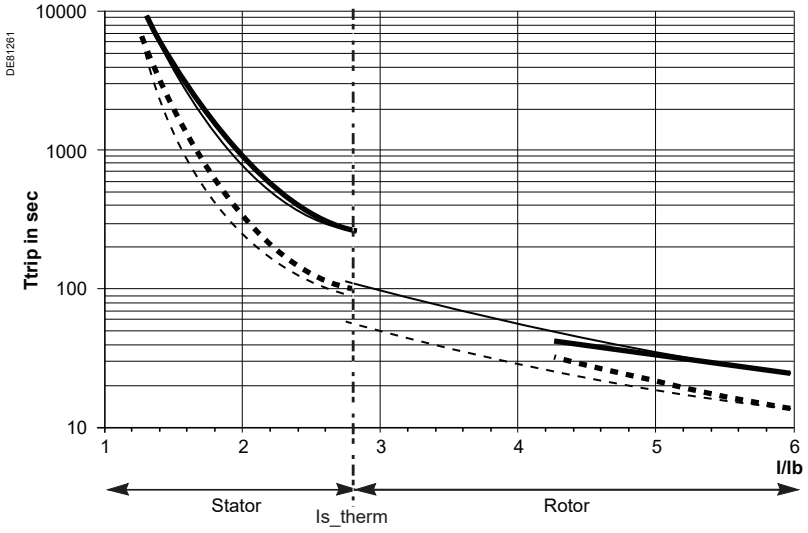

Comparison of the manufacturer curves and the configured model.

Example of parameter setting no. 2: 600 kW / 6 kV motor

We have the following manufacturer data:

Parameter	Name	Value	Rotor / stator
insulation class		F	-
rated current	Ib	69.9 A	-
starting current	IL	6 Ib	rotor
rated torque	Tn	392.2 kgm	rotor
starting torque	LRT	0.9 Tn	rotor
motor time constant	τlong	60 minutes	stator
cooling constant	τcool	180 minutes	stator
locked cold / hot rotor limit time	Tc / Th	33.5 s / 25 s	rotor
starting time		1.2 s	-
number of consecutive cold (hot) starts		2 (1)	-

Setting the function parameters

1. Selection of the "2 Time constants" value from the "Thermal Model" drop-down list to select the motor thermal overload protection function.

2. Set the rotor and stator parameters using the manufacturer data:

Rotor parameter	Name	Value
Locked cold rotor limit time	Tc	33.5 s
Locked hot rotor limit time	Th	25 s
Locked rotor torque	LRT	0.9 pu rated torque
Starting current	IL	6 Ib
Stator parameter	**Name**	**Value**
Alarm current set point	Ialarm	< Itrip
Heating time constant	τlong	60 minutes
Cooling time constant	τcool	180 minutes

3. Determination of Is_therm switching threshold between the 2 models.

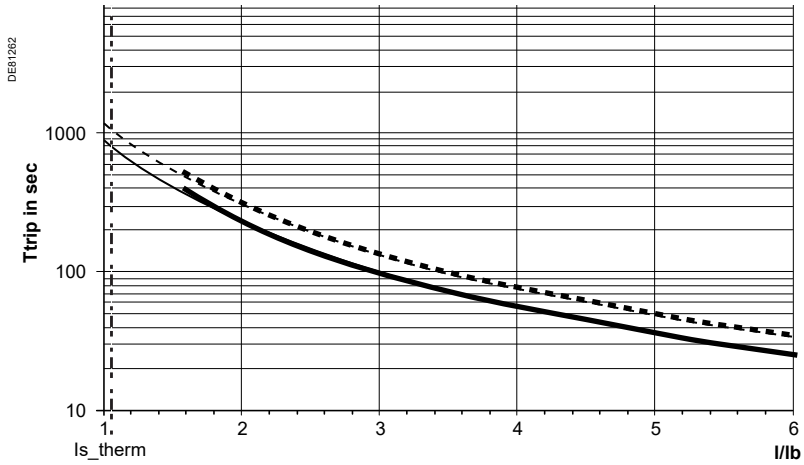

In this example the rotor and stator manufacturer curves (in bold lines) merge into one another.
We therefore plot the rotor model curves (in fine lines) defined by:

- cold curve

$$W(I) = 33{,}5 \cdot (6/I)^2$$

- hot curve

$$W(I) = 25 \cdot (6/I)^2$$

We can see that the rotor model curve coincides with the manufacturer curve over the whole current range I/Ib.
We therefore select the Is_therm switching threshold = 1.01 Ib.
The rotor model thus protects the motor over its whole operating range.

4. Determination of the stator parameters:
The SFT2841 software calculates the following stator parameters:

Calculated stator parameter	Name	Value
Tripping current set point	Itrip	1.01 Ib
Stator heating time constant	τshort	60 Minutes
Thermal exchange coefficient between stator and motor	α	1

In this example, the stator thermal overload protection is only used to define the thermal state of the motor, in order to be able to:
- change the locked cold rotor limit time value to its corresponding hot value
- define the hot / cold thermal state of the motor.

The function parameter setting is complete.

Thermal overload for motors
ANSI code 49RMS
Additional information about the models

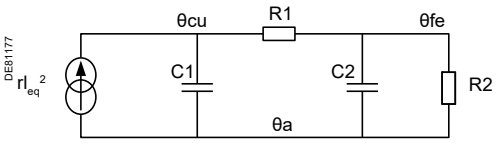

Stator thermal model.

rI_{eq}^2 : heat generated by the copper losses at equivalent current Ieq
C1 : stator thermal capacity
R1 : thermal resistance between the stator and the motor metal frame
C2 : motor thermal capacity
R2 : motor thermal resistance
θa : ambient temperature
θcu : stator winding temperature
θfe : motor metal frame temperature
τshort = R1C1: stator winding time constant
τlong = R2C2 : motor metal frame time constant

Stator thermal model

The stator thermal model takes account of thermal exchanges between the stator winding and the motor metal frames using 2 time constants.

Having used α to designate the ratio R2/(R1+R2), the stator winding relative thermal capacity used E transfer function is expressed as follows:

$$\mathbf{E(p)} = \left[\frac{(1-\alpha)}{(1+p\tau_{short})} + \frac{\alpha}{(1+p\tau_{long})}\right]$$

where $0 < \alpha < 1$.
The thermal model time response with two time constants is proportional to the square of the current.

$$\mathbf{E(I_{eq},t)} = \left[(1-\alpha)\cdot\left(1-e^{-\frac{t}{\tau_{short}}}\right) + \alpha\cdot\left(1-e^{-\frac{t}{\tau_{long}}}\right)\right]\cdot I_{eq}^2$$

The stator thermal overload protection trips when $E(I_{eq},t) = K^2$, K being the permissible continuous current in pu of Ib.
For $\alpha = 0$, there is no thermal exchange between the stator and the metal frame since the motor thermal resistance R2 is zero. Thus the stator heats up with the lowest time constant τshort.
Conversely for $\alpha = 1$, the thermal exchange between the stator and the metal frame is perfect, therefore the stator and the metal frame only make one, resulting in the stator heating up with a time constant close to that of the metal frame τlong.
For $0 < \alpha < 1$, thermal management with 2 time constants makes it possible:
- to protect the stator winding correctly against strong overloads, since the resulting time constant is close to the stator time constant
- for the motor to run at low overload as close as possible to the limits defined by the manufacturer data, since the resulting time constant is close to that of the metal frame.

Illustration of the influence of the α coefficient on a motor whose time constants are as follows:
- stator winding: τshort = 4 mn
- metal frame: τlong = 60 mn.

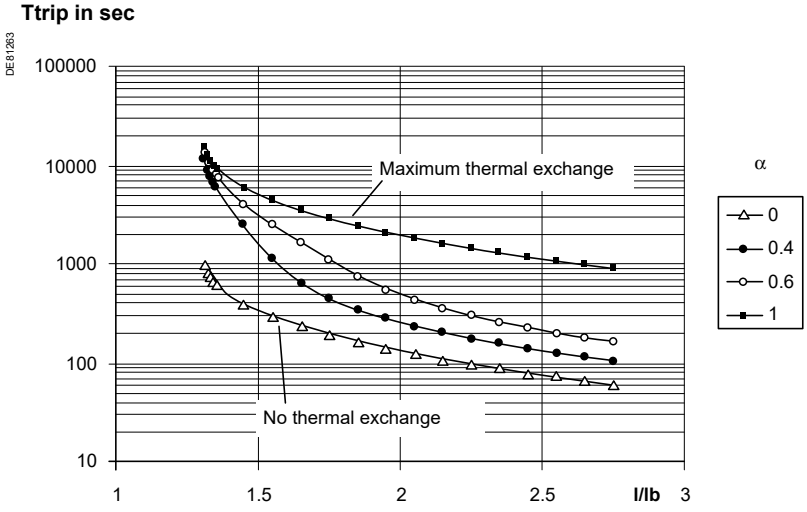

Influence of the α coefficient on a motor.

Thermal overload for motors
ANSI code 49RMS
Additional information about the models

Stator thermal model (continued)

Equivalent current I_{eq}

The presence of a negative sequence component accelerates the motor temperature build-up. The current negative sequence component is taken into account in the protection function by the equation

$$I_{eq} = \sqrt{\left(\frac{Id}{Ib}\right)^2 + Ki \cdot \left(\frac{Ii}{Ib}\right)^2}$$

where Id is the current positive sequence component
Ii is the current negative sequence component
Ib is the motor rated current
Ki is the negative sequence component coefficient.

For an asynchronous motor, Ki is calculated using the following parameters:
- LRT: locked rotor torque in pu of the rated torque
- I_L: starting current in pu of the rated current Ib
- N: rated speed in rpm.

The number of pairs of poles np is defined by the expression:

$$np = int\left(\frac{60 \cdot fn}{N}\right)$$

The rated slip g_n is defined by the expression:

$$g_n = 1 - \frac{N \cdot np}{60 \cdot fn}$$

where fn is the network frequency in Hz.

The coefficient Ki is defined by the expression:

$$Ki = 2\frac{LRT}{g_n \cdot I_L^2} - 1$$

Accounting for ambient temperature

Asynchronous motors are designed to run at a maximum ambient temperature of 40 °C (104 °F). Where Sepam is equipped with the temperature sensor module option (with sensor no. 8 assigned to measuring the ambient temperature), the stator thermal capacity used is multiplied by the correction factor fcorr, from the time when the ambient temperature is higher than 40 °C.

$$fcorr = \frac{T_{max} - 40}{T_{max} - T_{ambiant}}$$

where Tmax is the maximum temperature in the thermal class for the motor insulating components defined in accordance with standard 60085.

Class	70	Y	A	E	B	F	H	200	220	250
Tmax in °C	70	90	105	120	130	155	180	200	220	250
Tmax in °F	158	194	221	248	266	311	356	392	428	482

Thermal overload for motors
ANSI code 49RMS
Additional information about the models

Stator thermal model (continued)

Metal frame thermal capacity used

Having used β to designate the ratio $\frac{\tau_{long}}{\tau_{long} - \tau_{short}}$

the motor metal frame relative thermal capacity used M transfer function is expressed as follows:

$$M(p) = \left[\frac{(1-\beta)}{(1+p\tau_{short})} + \frac{\beta}{(1+p\tau_{long})}\right]$$

where $\beta > 1$.

Example: Starting with a zero initial thermal capacity used and applying a current the same as the rated current Ib, the stator and metal frame relative thermal capacity used reach 100 %.

Initially, the metal frame thermal capacity used has a zero slope, until the heat transfer is established between the stator and the metal frame.

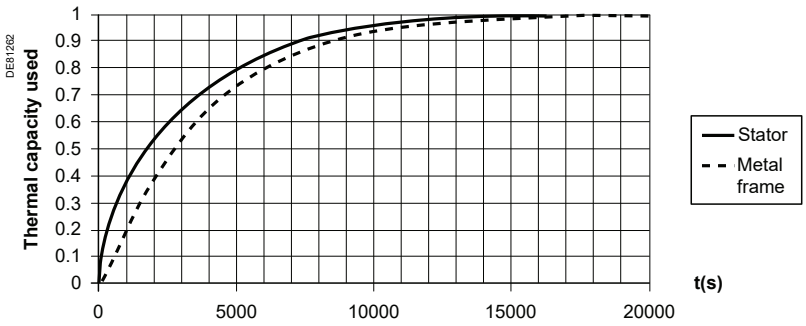

Stator and metal frame thermal capacity used for a load current Ib.

The metal frame relative thermal capacity used is used to:
- adapt the rotor protection rotor limit time
- define the hot state of the motor.

Cooling time constant

When the current Ieq is less than 5 % of Ib, the motor is deemed to have stopped. In this case it is the cooling time constant τcool of the metal frame that is taken into account to estimate stator cooling.

Thermal overload for motors
ANSI code 49RMS
Additional information about the models

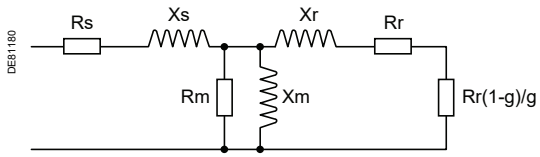

Steinmetz diagram.

Rs: stator resistance
Xs: stator reactance
Rr: rotor resistance
Xr: rotor reactance
Rm: magnetic loss
Xm: magnetizing reactance
g: slip

Rotor thermal model

For the rotor, guide IEEE C37.96-2000 on protection of asynchronous motors defines an adiabatic thermal model, dependent on the slip, which is based on the equivalent Steinmetz diagram.

During the asynchronous motor starting phase, rotoric currents travel across the rotor conductors to a depth that depends on the slip.
Therefore the rotor inductance Xr and the rotor resistance Rr vary as a function of the slip g as follows:
Rr = Kr g + Ro
Xr = Kx g + Xo

Kr: coefficient taking account of the increase in the rotor resistance
Kx: coefficient taking account of the decrease in the rotor reactance

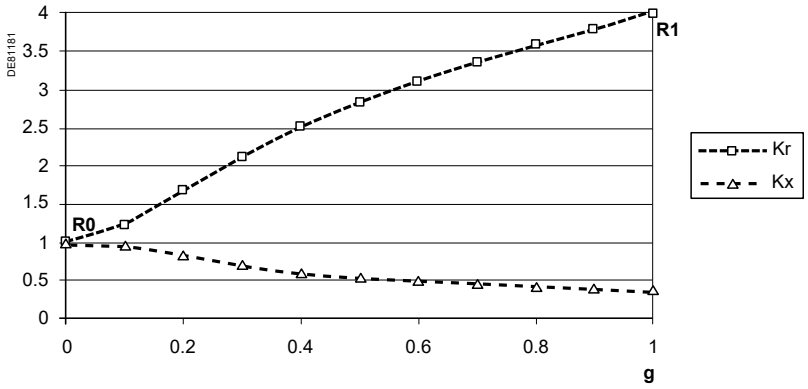

Coefficients Kr and Kx as a function of the slip.

Assuming that the positive sequence rotor resistance Rr+ varies almost linearly between Ro and R1:

$$R_{r+} = (R_1 - R_0) \cdot g + R_0$$

The proportion of negative sequence current can be high during the motor starting phase. As a result the negative sequence rotor resistance Rr- is high in order to evaluate the rotor thermal capacity used.
It is obtained by replacing the slip g with the negative slip sequence (2 - g).
Thus:

$$R_{r-} = (R_1 - R_0) \cdot (2 - g) + R_0$$

The thermal model used in the Sepam relay measures the active part of the positive sequence impedance during the motor starting phase to evaluate the slip g.

Depending on the motor status, the positive and negative sequence rotor resistances are as follows:

Motor status	R_{r+}	R_{r-}
Stop (g=1)	R_1	R_1
Rated speed (g ≈ 0)	R_0	$2\,R_1 - R_0$

Thermal overload for motors
ANSI code 49RMS
Additional information about the models

Rotor thermal model (continued)

The mechanical power developed by the motor equals the electrical power drawn in the resistance Rr (1 - g) / g.
The torque Q equals:

$$Q = \frac{P}{w} = \frac{P}{1-g} = \frac{\frac{R_r(g) \cdot (1-g)}{g} \cdot I_L^2}{1-g} = I_L^2 \cdot \frac{R_r(g)}{g}$$

Thus:

$$R_r(g) = \frac{Q}{I_L^2} \cdot g$$

When the motor has stopped, g = 1. We can therefore deduce that:

$$R_1 = \frac{LRT}{I_L^2} \quad \text{(in pu of Zn)}$$

Where LRT: locked rotor torque in pu of the rated torque
I_L: locked rotor current in pu of Ib

When the motor is at rated speed, the torque Q equals the rated torque Qn and the current equals the rated current In, thus $R_0 = g_n$ (in pu of Zn).
Where:

$$Zn = \frac{Un}{\sqrt{3} Ib}$$

g_n: rated slip

When the motor is at its rated speed of rotation, the ratio between the positive and negative sequence resistances is:

$$2\frac{R_1}{R_0} - 1 = 2\frac{LRT}{g_n \cdot I_L^2} - 1$$

During the starting phase the rotor thermal capacity used W is defined by the following expression:

$$W_n = W_{n-1} + \left[\frac{R_{r+}}{R_1}\left(\frac{Id}{I_L}\right)^2 + \frac{R_{r-}}{R_1}\left(\frac{Ii}{I_L}\right)^2\right] \cdot \frac{dt}{T(M)}$$

Where T(M): locked rotor limit time depends on the thermal state of the motor M:
T(M) = Tc - (Tc - Th) x M, where 0 ≤M ≤1.
Tc: locked cold rotor limit time at the starting current I_L
Th: locked hot rotor limit time at the starting current I_L.

Example for a motor whose starting time is 5 s and the locked cold rotor limit time is 20 s.
■ When the rotor is locked, the slip g = 1, as a result Rr+ = R1. Thus the thermal capacity used is 5/20 = 25 %.
■ When the slip g changes from 1 to 0 in 5 s, the rotor thermal capacity used is 17 %.

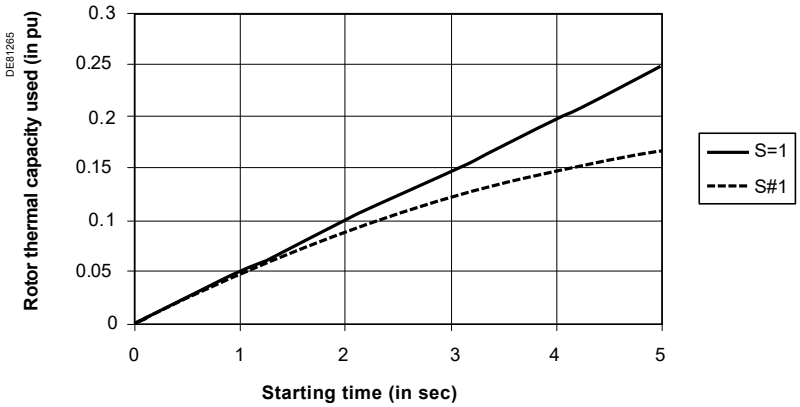

Comparison of the rotor thermal capacity used during normal starting with locked rotor.

Thermal overload for machines
ANSI code 49RMS

Protection of equipment against thermal damage caused by overloads.

Description

This function is used to protect equipment (motors, transformers, generators) against overloads, based on measurement of the current drawn.

Operation curve

The protection issues a trip order when the heat rise E, calculated according to the measurement of an equivalent current Ieq, is greater than the set point Es.
The greatest permissible continuous current is
$I = Ib\sqrt{Es}$
The protection tripping time is set by the time constant T.

- the calculated heat rise depends on the current drawn and the previous heat rise
- the cold curve defines the protection tripping time based on zero heat rise
- the hot curve defines the protection tripping time based on 100 % rated heat rise.

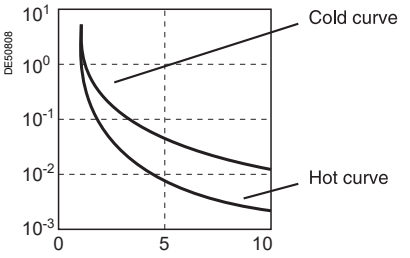

In: natural logarithm.

$$\frac{t}{T} = \ln \frac{\left(\frac{Ieq}{Ib}\right)^2}{\left(\frac{Ieq}{Ib}\right)^2 - Es}$$

$$\frac{t}{T} = \ln \frac{\left(\frac{Ieq}{Ib}\right)^2 - 1}{\left(\frac{Ieq}{Ib}\right)^2 - Es}$$

Alarm set point, tripping set point

Two set points are available for heat rise:

- Es1: alarm
- Es2: tripping.

"Hot state" set point

When the function is used to protect a motor, this fixed set point is designed for detection of the hot state used by the number of starts function. The value of the fixed set point is 50 %.

Heat rise and cooling time constants

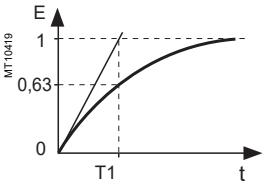

Heat rise time constant.

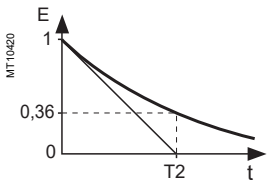

Cooling time constant.

For self-ventilated rotating machines, cooling is more effective when the machine is running than when it is stopped. Running and stopping of the equipment are calculated based on the value of the current:

- running if I > 0.1 Ib
- stopped if I < 0.1 Ib.

Two time constants may be set:

- T1: heat rise time constant: concerns equipment that is running
- T2: cooling time constant: concerns equipment that is stopped.

Taking into account harmonics

The current measured by the thermal protection is an RMS 3-phase current which takes into account harmonics up to number 13.

Thermal overload for machines
ANSI code 49RMS

Taking into account ambient temperature
Most machines are designed to operate at a maximum ambient temperature of 40°C (104°F). The thermal overload function takes into account the ambient temperature (Sepam equipped with the temperature sensor option with sensor 8 assigned to ambient temperature metering) to increase the calculated heat rise value when the temperature measured exceeds 40°C (104°F).

Increase factor: $fa = \frac{Tmax - 40°C}{Tmax - Tambiant}$

where T max is the equipment maximum temperature (according to insulation class)
T ambient is the measured temperature.

Table of insulation classes

Class	Y	A	E	B	F	H	200	220	250
Tmax	90 °C	105 °C	120 °C	130 °C	155 °C	180 °C	200 °C	220 °C	250 °C
Tmax	194 °F	221 °F	248 °F	266 °F	311 °F	356 °F	392 °F	428 °F	482 °F

Reference IEC 60085 (1984).

Adaptation of the protection to motor thermal withstand
Motor thermal protection is often set based on the hot and cold curves supplied by the machine manufacturer.
To fully comply with these experimental curves, additional parameters must be set:
■ initial heat rise, Es0, is used to reduce the cold tripping time.

modified cold curve: $\frac{t}{T} = \ln \frac{\left(\frac{Ieq}{Ib}\right)^2 - Es0}{\left(\frac{Ieq}{Ib}\right)^2 - Es}$ where ln: natural logarithm

■ a second group of parameters (time constants and set points) is used to take into account thermal withstand with locked rotors. This second set of parameters is taken into account when the current is greater than an adjustable set point Is.

Taking into account the negative sequence component
In the case of motors with coiled rotors, the presence of a negative sequence component increases the heat rise in the motor. The negative sequence component of the current is taken into account in the protection function by the equation.

$Ieq = \sqrt{Iph^2 + K \times Ii^2}$ where Iph is the largest phase current
Ii is the negative sequence component of the current
K is a adjustable coefficient

K may have the following values: 0 - 2.25 - 4.5 - 9
For an asynchronous motor, K is determined as follows:

$K = 2 \times \frac{Cd}{Cn} \times \frac{1}{g \times \left(\frac{Id}{Ib}\right)^2} - 1$ where Cn, Cd: rated torque and starting torque
Ib, Id: base current and starting current
g: rated slip

Learning of the cooling time constant T2
The time constant T2 may be learnt according to the temperatures measured in the equipment by temperature sensors connected to the MET148-2 module number 1.
T2 is estimated:
■ after a heating/cooling sequence:
□ heating period detected by ES > 70 %
□ followed by a shutdown detected by Ieq < 10 % of Ib
■ when the machine temperature is measured by RTDs connected to MET148-2 module number 1:
□ RTD 1, 2 or 3 assigned to motor/generator stator temperature measurement
□ RTD 1, 3 or 5 assigned to transformer temperature measurement.
After each new heating/cooling sequence is detected, a new T2 value is estimated.
Following estimation, T2 can be used in two manners:
■ automatically, in which case each new calculated value updates the T2 constant used
■ or manually by entering the value for the T2 parameter.
Measurement accuracy may be improved by using RTD 8 to measure the ambient temperature.
Because the function has two operating modes, a time constant is estimated for each mode.
For generator-transformer unit or motor-transformer unit applications, it is advised to connect the rotating machine RTDs to MET148-2 module number 1 to take advantage of T2 learning on the rotating machine rather than on the transformer.

Thermal overload for machines
ANSI code 49RMS

Start inhibit
The thermal overload protection can inhibit the closing of the motor control device until the heat rise drops back down below a value that allows restarting.
This value takes into account the heat rise produced by the motor when starting.
The inhibition function is grouped together with the **starts per hour** protection function and the indication START INHIBIT informs the user.

Saving the heat rise information
The current heat rise is saved in the event of an auxiliary power failure.

Inhibition of tripping
Tripping of the thermal overload protection may be inhibited by the logic input "Inhibit thermal overload" when required by the process.

Use of two operating modes
The thermal overload protection function may be used to protect equipment with two operating modes, for example:

- transformers with two ventilation modes, with or without forced ventilation (ONAN / ONAF)
- two-speed motors.

The protection function comprises two groups of settings, and each group is suitable for equipment protection in one of the two operating modes.
Switching from one group of thermal settings to the other is done without losing the heat rise information. It is controlled:

- either via a logic input, assigned to the "switching of thermal settings" function
- or when the phase current reaches an adjustable Is set point (to be used for switching of thermal settings of a motor with locked rotor).

The base current of the equipment, used to calculate heat rise, also depends on the operating mode:

- for logic input switching in mode 2, the base current Ib-mode 2, a specific thermal overload protection setting, is used to calculate the heat rise in the equipment
- in all other cases, the base current Ib, defined as a general Sepam parameter, is used to calculate the heat rise in the equipment.

Startup Heating (motor protection)
The startup heating can be either :

- Self-learnt : The protection evaluates the startup heating everytime the motor starts, and the new evaluation determines the time until a restart is enabled.
- Submitted as a parameter : In this case it is fixed. (version ≥ 10)

User information
The following information is available for the user:

- heat rise
- learnt cooling time constant T2
- time before restart enabled (in case of inhibition of starting) also preventively computed by the motor generic protection
- time before tripping (with constant current).

See the section on measurement and machine operation assistance functions.

Block diagram

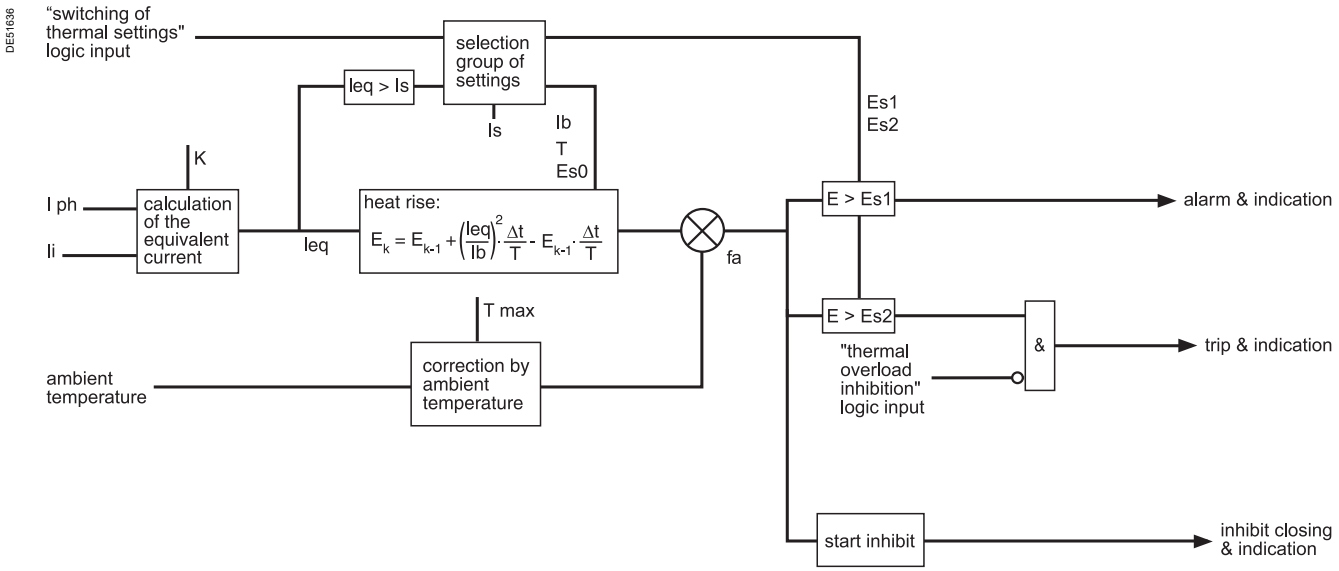

Thermal overload for machines
ANSI code 49RMS

Characteristics

Settings	
Taking into account the negative sequence component K	
Setting range	0 - 2.25 - 4.5 - 9
Taking into account ambient temperature	
Setting range	Yes / no
Using the learnt cooling time constant T2	
Setting range	Yes / no
Maximum equipment temperature Tmax (according to insulation class)	
Setting range	60 °C to 200 °C or 140 °F to 392 °F
Resolution	1°C or 1°F
Start inhibit time preventive computation (3) (version ≥ 10)	
Setting range	yes / No
Start heating user input (version ≥ 10)	
Setting range	yes / No
Start heating value - Estart (4) (version ≥ 10)	
Setting range	0% to 270%
Resolution	1%

(3) applies to both the start inhibit time and the start inhibit signal

(4)The Start heating value (Estart) can be determined from the motor starting current (Istart, in multiple of Ib), the motor starting time (Tstart) and the heating time constant T1 of ANSI 49RMS protection: $Estart=(Istart^2 \times Tstart)/T1$

Example :
Istart = 6xIb, Tstart = 20s, T1 = 1200s
Estart = 6x6x20/1200 = 60%

Thermal mode 1	
Alarm set point Es1	
Setting range	0 % to 300 %
Accuracy (1)	±2 %
Resolution	1 %
Tripping set point Es2	
Setting range	0 % to 300 %
Accuracy (1)	±2 %
Resolution	1 %
Initial heat rise set point Es0	
Setting range	0 % to 100 %
Accuracy (1)	±2 %
Resolution	1 %
Heat rise time constant T1	
Setting range	1 min. to 600 min.
Resolution	1 min.
Cooling time constant T2	
Setting range	5 min. to 600 min.
Resolution	1 min.

Thermal mode 2	
Using thermal mode 2	
Setting range	Yes / no
Alarm set point Es1	
Setting range	0 % to 300 %
Accuracy (1)	±2 %
Resolution	1 %
Tripping set point Es2	
Setting range	0 % to 300 %
Accuracy (1)	±2 %
Resolution	1 %
Initial heat rise set point Es0	
Setting range	0 % to 100 %
Accuracy (1)	±2 %
Resolution	1 %
Heat rise time constant T1	
Setting range	1 min. to 600 min.
Resolution	1 min.
Cooling time constant T2	
Setting range	5 min. to 600 min.
Resolution	1 min.
Switching set point for thermal mode 2	
Setting range	25 % to 800 % of Ib
Accuracy (1)	±5 %
Resolution	1 %
Base current Ib - mode 2	
Setting range	0.2 to 2.6 In or I'n
Accuracy (1)	±5 %
Resolution	1 A
Characteristic times (1)	
Operation time accuracy	±2 % or ±1 s

(1) *Under reference conditions (IEC 60255-8).*

Inputs			
Designation	**Syntax**	**Equations**	
Protection reset	P49RMS_1_101	■	
Protection inhibition	P49RMS_1_113	■	
Outputs			
Designation	**Syntax**	**Equations**	**Matrix**
Delayed output	P49RMS_1_3	■	■
Alarm	P49RMS_1_10	■	■
Inhibit closing	P49RMS_1_11	■	■
Protection inhibited	P49RMS_1_16	■	
Hot state	P49RMS_1_18	■	
Inhibit thermal overload	P49RMS_1_32	■	

Thermal overload for machines
ANSI code 49RMS
Setting examples

Example 1: motor

The following data are available:
- time constants for on operation T1 and off operation T2:
  - T1 = 25 min.
  - T2 = 70 min.
- maximum steady state current: Imax/Ib = 1.05.

Setting of tripping set point Es2

Es2 = $(Imax/Ib)^2$ = 110 %

Note. If the motor draws a current of 1.05 Ib continuously, the heat rise calculated by the thermal overload protection will reach 110 %.

Setting of alarm set point Es1

Es1 = 90 % (I/Ib = 0.95).

Knegative: 4.5 (usual value)

The other thermal overload parameters do not need to be set. They are not taken into account by default.

Example 2: motor

The following data are available:
- motor thermal withstand in the form of hot and cold curves (see solid line curves in Figure 1)
- cooling time constant T2
- maximum steady state current: Imax/Ib = 1.05.

Setting of tripping set point Es2

Es2 = $(Imax/Ib)^2$ = 110 %

Setting of alarm set point Es1:

Es1 = 90 % (I/Ib = 0.95).

The manufacturer's hot/cold curves **(1)** may be used to determine the heating time constant T1.

The method consists of placing the Sepam hot/cold curves below those of the motor.

Figure 1. Motor thermal withstand and thermal overload tripping curves.

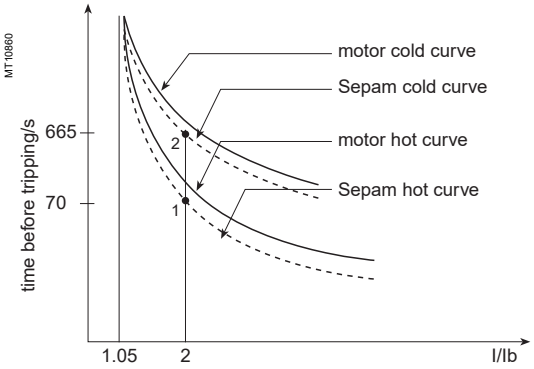

For an overload of 2Ib, the value t/T1 = 0.0339 **(2)**.

In order for Sepam to trip at point 1 (t = 70 s), T1 is equal to 2065 sec ≈ 34 min.

With a setting of T1 = 34 min., the tripping time is obtained based on a cold state (point 2). In this case, it is equal to t/T1 = 0.3216 ⇒t = 665 sec, i.e. ≈ 11 min., which is compatible with the motor thermal withstand when it is cold.

The negative sequence factor K is calculated using the equation defined on page 136.

The parameters of the 2nd thermal overload relay do not need to be set.

They are not taken into account by default.

Example 3: motor

The following data are available:
- motor thermal withstand in the form of hot and cold curves (see solid line curves in Figure 2)
- cooling time constant T2
- maximum steady state current: Imax/Ib = 1.1.

The thermal overload parameters are determined in the same way as in the previous example.

Setting of tripping set point Es2

Es2 = $(Imax/Ib)^2$ = 120 %

Setting of alarm set point Es1

Es1 = 90 % (I/Ib = 0.95).

The time constant T1 is calculated so that the thermal overload protection trips after 100 seconds (point 1).

With t/T1 = 0.069 (I/Ib = 2 and Es2 = 120 %):

⇒T1 = 100 sec / 0.069 = 1449 sec ≈ 24 min.

The tripping time starting from the cold state is equal to:

t/T1 = 0.3567 ⇒t = 24 min. x 0.3567 = 513 sec (point 2').

This tripping time is too long since the limit for this overload current is 400 sec (point 2).

If the time constant T1 is lowered, the thermal overload protection will trip earlier, below point 2.

The risk that motor starting when hot will not be possible also exists in this case (see Figure 2 in which a lower Sepam hot curve would intersect the starting curve with U = 0.9 Un).

The **Es0 parameter** is a setting that is used to solve these differences by lowering the Sepam cold curve without moving the hot curve.

In this example, the thermal overload protection should trip after 400 sec starting from the cold state.

The following equation is used to obtain the Es0 value:

$$Es0 = \left[\frac{I_{processed}}{I_b}\right]^2 - e^{\frac{t_{necessary}}{T_1}} \times \left[\left[\frac{I_{processed}}{I_b}\right]^2 - Es2\right]$$

where:

$t_{necessary}$: tripping time necessary starting from a cold state.

$I_{processed}$: equipment current.

***(1)** When the machine manufacturer provides both a time constant T1 and the machine hot/cold curves, the use of the curves is recommended since they are more accurate.*

***(2)** It is possible to use the charts containing the numerical values of the Sepam hot curve or the equation of the curve which is given on page 135.*

Thermal overload for machines
ANSI code 49RMS
Setting examples

In numerical values, the following is obtained:

$$Es0 = 4 - e^{\frac{400\ s}{24 \times 60\ s}} \times \left[4 - (1.2)\right] = 0.3035 \approx (31\ \%)$$

By setting Es0 = 31 %, point 2' is moved downward to obtain a shorter tripping time that is compatible with the motor thermal withstand when cold (see Figure 3).
Note. A setting Es0 = 100 % therefore means that the hot and cold curves are the same.

Figure 2. Hot/cold curves not compatible with the motor thermal withstand.

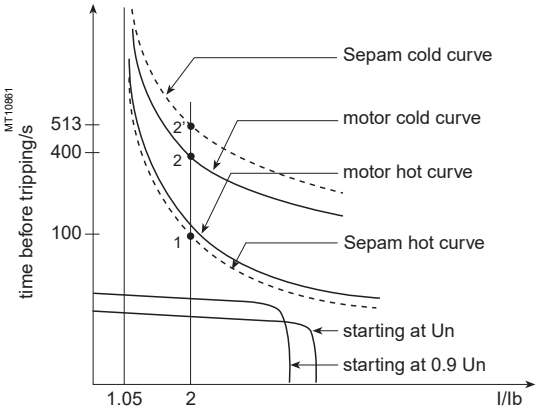

Figure 3. Hot/cold curves compatible with the motor thermal withstand via the setting of an initial heat rise Es0.

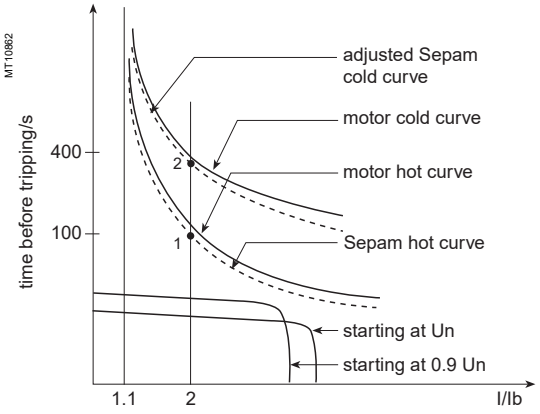

Use of the additional setting group
When a motor rotor is locked or is turning very slowly, its thermal behavior is different from that with the rated load.
In such conditions, the motor is damaged by overheating of the rotor or stator. For high power motors, rotor overheating is most often a limiting factor.
The thermal overload parameters chosen for operation with a low overload are no longer valid.
In order to protect the motor in this case, "excessive starting time" protection may be used.
Nevertheless, motor manufacturers provide the thermal withstand curves when the rotor is locked, for different voltages at the time of starting.

Figure 4. Locked rotor thermal withstand.

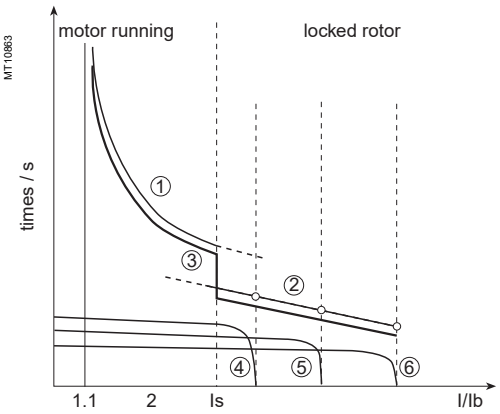

① thermal withstand, motor running
② thermal withstand, motor stopped
③ Sepam tripping curve
④ starting at 65 % Un
⑤ starting at 80 % Un
⑥ starting at 100 % Un

In order to take these curves into account, the 2nd thermal overload relay may be used.
The time constant in this case is, in theory, shorter, however, it should be determined in the same way as that of the 1st relay.
The thermal overload protection switches between the first and second relay if the equivalent current Ieq exceeds the Is value (set point current).

Example 4. transformer with 2 ventilation modes

The following data are available:
The rated current of a transformer with 2 ventilation modes is:
■ Ib = 200 A without forced ventilation (ONAN mode), the main operating mode of the transformer
■ Ib = 240 A with forced ventilation (ONAF mode), a temporary operating mode, to have 20 % more power available

Setting of the base current for ventilation operating mode 1: Ib = 200 A
(to be set in the Sepam general parameters).
Setting of the base current for ventilation operating mode 2: Ib2 = 240 A
(to be set among the specific thermal overload protection settings).
Switching of thermal settings via logic input, to be assigned to the "switching of thermal settings" function and to be connected to the transformer ventilation control unit.
The settings related to each ventilation operating mode (Es set points, time constants, etc.) are to be determined according to the transformer characteristics provided by the manufacturer.

Thermal overload for machines
ANSI code 49RMS
Tripping curves

Cold curves for Es0 = 0 %

I/Ib Es (%)	1.00	1.05	1.10	1.15	1.20	1.25	1.30	1.35	1.40	1.45	1.50	1.55	1.60	1.65	1.70	1.75	1.80
50	0.6931	0.6042	0.5331	0.4749	0.4265	0.3857	0.3508	0.3207	0.2945	0.2716	0.2513	0.2333	0.2173	0.2029	0.1900	0.1782	0.1676
55	0.7985	0.6909	0.6061	0.5376	0.4812	0.4339	0.3937	0.3592	0.3294	0.3033	0.2803	0.2600	0.2419	0.2257	0.2111	0.1980	0.1860
60	0.9163	0.7857	0.6849	0.6046	0.5390	0.4845	0.4386	0.3993	0.3655	0.3360	0.3102	0.2873	0.2671	0.2490	0.2327	0.2181	0.2048
65	1.0498	0.8905	0.7704	0.6763	0.6004	0.5379	0.4855	0.4411	0.4029	0.3698	0.3409	0.3155	0.2929	0.2728	0.2548	0.2386	0.2239
70	1.2040	1.0076	0.8640	0.7535	0.6657	0.5942	0.5348	0.4847	0.4418	0.4049	0.3727	0.3444	0.3194	0.2972	0.2774	0.2595	0.2434
75	1.3863	1.1403	0.9671	0.8373	0.7357	0.6539	0.5866	0.5302	0.4823	0.4412	0.4055	0.3742	0.3467	0.3222	0.3005	0.2809	0.2633
80	1.6094	1.2933	1.0822	0.9287	0.8109	0.7174	0.6413	0.5780	0.5245	0.4788	0.4394	0.4049	0.3747	0.3479	0.3241	0.3028	0.2836
85	1.8971	1.4739	1.2123	1.0292	0.8923	0.7853	0.6991	0.6281	0.5686	0.5180	0.4745	0.4366	0.4035	0.3743	0.3483	0.3251	0.3043
90	2.3026	1.6946	1.3618	1.1411	0.9808	0.8580	0.7605	0.6809	0.6147	0.5587	0.5108	0.4694	0.4332	0.4013	0.3731	0.3480	0.3254
95		1.9782	1.5377	1.2670	1.0780	0.9365	0.8258	0.7366	0.6630	0.6012	0.5486	0.5032	0.4638	0.4292	0.3986	0.3714	0.3470
100		2.3755	1.7513	1.4112	1.1856	1.0217	0.8958	0.7956	0.7138	0.6455	0.5878	0.5383	0.4953	0.4578	0.4247	0.3953	0.3691
105		3.0445	2.0232	1.5796	1.3063	1.1147	0.9710	0.8583	0.7673	0.6920	0.6286	0.5746	0.5279	0.4872	0.4515	0.4199	0.3917
110			2.3979	1.7824	1.4435	1.2174	1.0524	0.9252	0.8238	0.7406	0.6712	0.6122	0.5616	0.5176	0.4790	0.4450	0.4148
115			3.0040	2.0369	1.6025	1.3318	1.1409	0.9970	0.8837	0.7918	0.7156	0.6514	0.5964	0.5489	0.5074	0.4708	0.4384
120				2.3792	1.7918	1.4610	1.2381	1.0742	0.9474	0.8457	0.7621	0.6921	0.6325	0.5812	0.5365	0.4973	0.4626
125				2.9037	2.0254	1.6094	1.3457	1.1580	1.0154	0.9027	0.8109	0.7346	0.6700	0.6146	0.5666	0.5245	0.4874
130					2.3308	1.7838	1.4663	1.2493	1.0885	0.9632	0.8622	0.7789	0.7089	0.6491	0.5975	0.5525	0.5129
135					2.7726	1.9951	1.6035	1.3499	1.1672	1.0275	0.9163	0.8253	0.7494	0.6849	0.6295	0.5813	0.5390
140						2.2634	1.7626	1.4618	1.2528	1.0962	0.9734	0.8740	0.7916	0.7220	0.6625	0.6109	0.5658
145						2.6311	1.9518	1.5877	1.3463	1.1701	1.0341	0.9252	0.8356	0.7606	0.6966	0.6414	0.5934
150						3.2189	2.1855	1.7319	1.4495	1.2498	1.0986	0.9791	0.8817	0.8007	0.7320	0.6729	0.6217
155							2.4908	1.9003	1.5645	1.3364	1.1676	1.0361	0.9301	0.8424	0.7686	0.7055	0.6508
160							2.9327	2.1030	1.6946	1.4313	1.2417	1.0965	0.9808	0.8860	0.8066	0.7391	0.6809
165								2.3576	1.8441	1.5361	1.3218	1.1609	1.0343	0.9316	0.8461	0.7739	0.7118
170								2.6999	2.0200	1.6532	1.4088	1.2296	1.0908	0.9793	0.8873	0.8099	0.7438
175								3.2244	2.2336	1.7858	1.5041	1.3035	1.1507	1.0294	0.9302	0.8473	0.7768
180									2.5055	1.9388	1.6094	1.3832	1.2144	1.0822	0.9751	0.8861	0.8109
185									2.8802	2.1195	1.7272	1.4698	1.2825	1.1379	1.0220	0.9265	0.8463
190									3.4864	2.3401	1.8608	1.5647	1.3555	1.1970	1.0713	0.9687	0.8829
195										2.6237	2.0149	1.6695	1.4343	1.2597	1.1231	1.0126	0.9209
200										3.0210	2.1972	1.7866	1.5198	1.3266	1.1778	1.0586	0.9605

Thermal overload for machines
ANSI code 49RMS
Tripping curves

Cold curves for Es0 = 0 %

I/Ib Es (%)	1.85	1.90	1.95	2.00	2.20	2.40	2.60	2.80	3.00	3.20	3.40	3.60	3.80	4.00	4.20	4.40	4.60
50	0.1579	0.1491	0.1410	0.1335	0.1090	0.0908	0.0768	0.0659	0.0572	0.0501	0.0442	0.0393	0.0352	0.0317	0.0288	0.0262	0.0239
55	0.1752	0.1653	0.1562	0.1479	0.1206	0.1004	0.0849	0.0727	0.0631	0.0552	0.0487	0.0434	0.0388	0.0350	0.0317	0.0288	0.0263
60	0.1927	0.1818	0.1717	0.1625	0.1324	0.1100	0.0929	0.0796	0.069	0.0604	0.0533	0.0474	0.0424	0.0382	0.0346	0.0315	0.0288
65	0.2106	0.1985	0.1875	0.1773	0.1442	0.1197	0.1011	0.0865	0.075	0.0656	0.0579	0.0515	0.0461	0.0415	0.0375	0.0342	0.0312
70	0.2288	0.2156	0.2035	0.1924	0.1562	0.1296	0.1093	0.0935	0.081	0.0708	0.0625	0.0555	0.0497	0.0447	0.0405	0.0368	0.0336
75	0.2474	0.2329	0.2197	0.2076	0.1684	0.1395	0.1176	0.1006	0.087	0.0761	0.0671	0.0596	0.0533	0.0480	0.0434	0.0395	0.0361
80	0.2662	0.2505	0.2362	0.2231	0.1807	0.1495	0.1260	0.1076	0.0931	0.0813	0.0717	0.0637	0.0570	0.0513	0.0464	0.0422	0.0385
85	0.2855	0.2685	0.2530	0.2389	0.1931	0.1597	0.1344	0.1148	0.0992	0.0867	0.0764	0.0678	0.0607	0.0546	0.0494	0.0449	0.0410
90	0.3051	0.2868	0.2701	0.2549	0.2057	0.1699	0.1429	0.1219	0.1054	0.092	0.0811	0.0720	0.0644	0.0579	0.0524	0.0476	0.0435
95	0.3251	0.3054	0.2875	0.2712	0.2185	0.1802	0.1514	0.1292	0.1116	0.0974	0.0858	0.0761	0.0681	0.0612	0.0554	0.0503	0.0459
100	0.3456	0.3244	0.3051	0.2877	0.2314	0.1907	0.1601	0.1365	0.1178	0.1028	0.0905	0.0803	0.0718	0.0645	0.0584	0.0530	0.0484
105	0.3664	0.3437	0.3231	0.3045	0.2445	0.2012	0.1688	0.1438	0.1241	0.1082	0.0952	0.0845	0.0755	0.0679	0.0614	0.0558	0.0509
110	0.3877	0.3634	0.3415	0.3216	0.2578	0.2119	0.1776	0.1512	0.1304	0.1136	0.1000	0.0887	0.0792	0.0712	0.0644	0.0585	0.0534
115	0.4095	0.3835	0.3602	0.3390	0.2713	0.2227	0.1865	0.1586	0.1367	0.1191	0.1048	0.0929	0.0830	0.0746	0.0674	0.0612	0.0559
120	0.4317	0.4041	0.3792	0.3567	0.2849	0.2336	0.1954	0.1661	0.1431	0.1246	0.1096	0.0972	0.0868	0.0780	0.0705	0.0640	0.0584
125	0.4545	0.4250	0.3986	0.3747	0.2988	0.2446	0.2045	0.1737	0.1495	0.1302	0.1144	0.1014	0.0905	0.0813	0.0735	0.0667	0.0609
130	0.4778	0.4465	0.4184	0.3930	0.3128	0.2558	0.2136	0.1813	0.156	0.1358	0.1193	0.1057	0.0943	0.0847	0.0766	0.0695	0.0634
135	0.5016	0.4683	0.4386	0.4117	0.3270	0.2671	0.2228	0.1890	0.1625	0.1414	0.1242	0.1100	0.0982	0.0881	0.0796	0.0723	0.0659
140	0.5260	0.4907	0.4591	0.4308	0.3414	0.2785	0.2321	0.1967	0.1691	0.147	0.1291	0.1143	0.1020	0.0916	0.0827	0.0751	0.0685
145	0.5511	0.5136	0.4802	0.4502	0.3561	0.2900	0.2414	0.2045	0.1757	0.1527	0.1340	0.1187	0.1058	0.0950	0.0858	0.0778	0.0710
150	0.5767	0.5370	0.5017	0.4700	0.3709	0.3017	0.2509	0.2124	0.1823	0.1584	0.1390	0.1230	0.1097	0.0984	0.0889	0.0806	0.0735
155	0.6031	0.5610	0.5236	0.4902	0.3860	0.3135	0.2604	0.2203	0.189	0.1641	0.1440	0.1274	0.1136	0.1019	0.0920	0.0834	0.0761
160	0.6302	0.5856	0.5461	0.5108	0.4013	0.3254	0.2701	0.2283	0.1957	0.1699	0.1490	0.1318	0.1174	0.1054	0.0951	0.0863	0.0786
165	0.6580	0.6108	0.5690	0.5319	0.4169	0.3375	0.2798	0.2363	0.2025	0.1757	0.1540	0.1362	0.1213	0.1088	0.0982	0.0891	0.0812
170	0.6866	0.6366	0.5925	0.5534	0.4327	0.3498	0.2897	0.2444	0.2094	0.1815	0.1591	0.1406	0.1253	0.1123	0.1013	0.0919	0.0838
175	0.7161	0.6631	0.6166	0.5754	0.4487	0.3621	0.2996	0.2526	0.2162	0.1874	0.1641	0.1451	0.1292	0.1158	0.1045	0.0947	0.0863
180	0.7464	0.6904	0.6413	0.5978	0.4651	0.3747	0.3096	0.2608	0.2231	0.1933	0.1693	0.1495	0.1331	0.1193	0.1076	0.0976	0.0889
185	0.7777	0.7184	0.6665	0.6208	0.4816	0.3874	0.3197	0.2691	0.2301	0.1993	0.1744	0.1540	0.1371	0.1229	0.1108	0.1004	0.0915
190	0.8100	0.7472	0.6925	0.6444	0.4985	0.4003	0.3300	0.2775	0.2371	0.2052	0.1796	0.1585	0.1411	0.1264	0.1140	0.1033	0.0941
195	0.8434	0.7769	0.7191	0.6685	0.5157	0.4133	0.3403	0.2860	0.2442	0.2113	0.1847	0.1631	0.1451	0.1300	0.1171	0.1062	0.0967
200	0.8780	0.8075	0.7465	0.6931	0.5331	0.4265	0.3508	0.2945	0.2513	0.2173	0.1900	0.1676	0.1491	0.1335	0.1203	0.1090	0.0993

Thermal overload for machines
ANSI code 49RMS
Tripping curves

Cold curves for Es0 = 0 %

I/Ib Es (%)	4.80	5.00	5.50	6.00	6.50	7.00	7.50	8.00	8.50	9.00	9.50	10.00	12.50	15.00	17.50	20.00
50	0.0219	0.0202	0.0167	0.0140	0.0119	0.0103	0.0089	0.0078	0.0069	0.0062	0.0056	0.0050	0.0032	0.0022	0.0016	0.0013
55	0.0242	0.0222	0.0183	0.0154	0.0131	0.0113	0.0098	0.0086	0.0076	0.0068	0.0061	0.0055	0.0035	0.0024	0.0018	0.0014
60	0.0264	0.0243	0.0200	0.0168	0.0143	0.0123	0.0107	0.0094	0.0083	0.0074	0.0067	0.0060	0.0038	0.0027	0.0020	0.0015
65	0.0286	0.0263	0.0217	0.0182	0.0155	0.0134	0.0116	0.0102	0.0090	0.0081	0.0072	0.0065	0.0042	0.0029	0.0021	0.0016
70	0.0309	0.0284	0.0234	0.0196	0.0167	0.0144	0.0125	0.0110	0.0097	0.0087	0.0078	0.0070	0.0045	0.0031	0.0023	0.0018
75	0.0331	0.0305	0.0251	0.0211	0.0179	0.0154	0.0134	0.0118	0.0104	0.0093	0.0083	0.0075	0.0048	0.0033	0.0025	0.0019
80	0.0353	0.0325	0.0268	0.0225	0.0191	0.0165	0.0143	0.0126	0.0111	0.0099	0.0089	0.0080	0.0051	0.0036	0.0026	0.0020
85	0.0376	0.0346	0.0285	0.0239	0.0203	0.0175	0.0152	0.0134	0.0118	0.0105	0.0095	0.0085	0.0055	0.0038	0.0028	0.0021
90	0.0398	0.0367	0.0302	0.0253	0.0215	0.0185	0.0161	0.0142	0.0125	0.0112	0.0100	0.0090	0.0058	0.0040	0.0029	0.0023
95	0.0421	0.0387	0.0319	0.0267	0.0227	0.0196	0.0170	0.0150	0.0132	0.0118	0.0106	0.0095	0.0061	0.0042	0.0031	0.0024
100	0.0444	0.0408	0.0336	0.0282	0.0240	0.0206	0.0179	0.0157	0.0139	0.0124	0.0111	0.0101	0.0064	0.0045	0.0033	0.0025
105	0.0466	0.0429	0.0353	0.0296	0.0252	0.0217	0.0188	0.0165	0.0146	0.0130	0.0117	0.0106	0.0067	0.0047	0.0034	0.0026
110	0.0489	0.0450	0.0370	0.0310	0.0264	0.0227	0.0197	0.0173	0.0153	0.0137	0.0123	0.0111	0.0071	0.0049	0.0036	0.0028
115	0.0512	0.0471	0.0388	0.0325	0.0276	0.0237	0.0207	0.0181	0.0160	0.0143	0.0128	0.0116	0.0074	0.0051	0.0038	0.0029
120	0.0535	0.0492	0.0405	0.0339	0.0288	0.0248	0.0216	0.0189	0.0167	0.0149	0.0134	0.0121	0.0077	0.0053	0.0039	0.0030
125	0.0558	0.0513	0.0422	0.0353	0.0300	0.0258	0.0225	0.0197	0.0175	0.0156	0.0139	0.0126	0.0080	0.0056	0.0041	0.0031
130	0.0581	0.0534	0.0439	0.0368	0.0313	0.0269	0.0234	0.0205	0.0182	0.0162	0.0145	0.0131	0.0084	0.0058	0.0043	0.0033
135	0.0604	0.0555	0.0457	0.0382	0.0325	0.0279	0.0243	0.0213	0.0189	0.0168	0.0151	0.0136	0.0087	0.0060	0.0044	0.0034
140	0.0627	0.0576	0.0474	0.0397	0.0337	0.0290	0.0252	0.0221	0.0196	0.0174	0.0156	0.0141	0.0090	0.0062	0.0046	0.0035
145	0.0650	0.0598	0.0491	0.0411	0.0349	0.0300	0.0261	0.0229	0.0203	0.0181	0.0162	0.0146	0.0093	0.0065	0.0047	0.0036
150	0.0673	0.0619	0.0509	0.0426	0.0361	0.0311	0.0270	0.0237	0.0210	0.0187	0.0168	0.0151	0.0096	0.0067	0.0049	0.0038
155	0.0696	0.0640	0.0526	0.0440	0.0374	0.0321	0.0279	0.0245	0.0217	0.0193	0.0173	0.0156	0.0100	0.0069	0.0051	0.0039
160	0.0720	0.0661	0.0543	0.0455	0.0386	0.0332	0.0289	0.0253	0.0224	0.0200	0.0179	0.0161	0.0103	0.0071	0.0052	0.0040
165	0.0743	0.0683	0.0561	0.0469	0.0398	0.0343	0.0298	0.0261	0.0231	0.0206	0.0185	0.0166	0.0106	0.0074	0.0054	0.0041
170	0.0766	0.0704	0.0578	0.0484	0.0411	0.0353	0.0307	0.0269	0.0238	0.0212	0.0190	0.0171	0.0109	0.0076	0.0056	0.0043
175	0.0790	0.0726	0.0596	0.0498	0.0423	0.0364	0.0316	0.0277	0.0245	0.0218	0.0196	0.0177	0.0113	0.0078	0.0057	0.0044
180	0.0813	0.0747	0.0613	0.0513	0.0435	0.0374	0.0325	0.0285	0.0252	0.0225	0.0201	0.0182	0.0116	0.0080	0.0059	0.0045
185	0.0837	0.0769	0.0631	0.0528	0.0448	0.0385	0.0334	0.0293	0.0259	0.0231	0.0207	0.0187	0.0119	0.0083	0.0061	0.0046
190	0.0861	0.0790	0.0649	0.0542	0.0460	0.0395	0.0344	0.0301	0.0266	0.0237	0.0213	0.0192	0.0122	0.0085	0.0062	0.0048
195	0.0884	0.0812	0.0666	0.0557	0.0473	0.0406	0.0353	0.0309	0.0274	0.0244	0.0218	0.0197	0.0126	0.0087	0.0064	0.0049
200	0.0908	0.0834	0.0684	0.0572	0.0485	0.0417	0.0362	0.0317	0.0281	0.0250	0.0224	0.0202	0.0129	0.0089	0.0066	0.0050

Thermal overload for machines
ANSI code 49RMS
Tripping curves

Hot curves

I/Ib Es (%)	1.00	1.05	1.10	1.15	1.20	1.25	1.30	1.35	1.40	1.45	1.50	1.55	1.60	1.65	1.70	1.75	1.80
105		0.6690	0.2719	0.1685	0.1206	0.0931	0.0752	0.0627	0.0535	0.0464	0.0408	0.0363	0.0326	0.0295	0.0268	0.0245	0.0226
110		3.7136	0.6466	0.3712	0.2578	0.1957	0.1566	0.1296	0.1100	0.0951	0.0834	0.0740	0.0662	0.0598	0.0544	0.0497	0.0457
115			1.2528	0.6257	0.4169	0.3102	0.2451	0.2013	0.1699	0.1462	0.1278	0.1131	0.1011	0.0911	0.0827	0.0755	0.0693
120			3.0445	0.9680	0.6061	0.4394	0.3423	0.2786	0.2336	0.2002	0.1744	0.1539	0.1372	0.1234	0.1118	0.1020	0.0935
125				1.4925	0.8398	0.5878	0.4499	0.3623	0.3017	0.2572	0.2231	0.1963	0.1747	0.1568	0.1419	0.1292	0.1183
130				2.6626	1.1451	0.7621	0.5705	0.4537	0.3747	0.3176	0.2744	0.2407	0.2136	0.1914	0.1728	0.1572	0.1438
135					1.5870	0.9734	0.7077	0.5543	0.4535	0.3819	0.3285	0.2871	0.2541	0.2271	0.2048	0.1860	0.1699
140					2.3979	1.2417	0.8668	0.6662	0.5390	0.4507	0.3857	0.3358	0.2963	0.2643	0.2378	0.2156	0.1967
145						1.6094	1.0561	0.7921	0.6325	0.5245	0.4463	0.3869	0.3403	0.3028	0.2719	0.2461	0.2243
150						2.1972	1.2897	0.9362	0.7357	0.6042	0.5108	0.4408	0.3864	0.3429	0.3073	0.2776	0.2526
155						3.8067	1.5950	1.1047	0.8508	0.6909	0.5798	0.4978	0.4347	0.3846	0.3439	0.3102	0.2817
160							2.0369	1.3074	0.9808	0.7857	0.6539	0.5583	0.4855	0.4282	0.3819	0.3438	0.3118
165							2.8478	1.5620	1.1304	0.8905	0.7340	0.6226	0.5390	0.4738	0.4215	0.3786	0.3427
170								1.9042	1.3063	1.0076	0.8210	0.6914	0.5955	0.5215	0.4626	0.4146	0.3747
175								2.4288	1.5198	1.1403	0.9163	0.7652	0.6554	0.5717	0.5055	0.4520	0.4077
180								3.5988	1.7918	1.2933	1.0217	0.8449	0.7191	0.6244	0.5504	0.4908	0.4418
185									2.1665	1.4739	1.1394	0.9316	0.7872	0.6802	0.5974	0.5312	0.4772
190									2.7726	1.6946	1.2730	1.0264	0.8602	0.7392	0.6466	0.5733	0.5138
195									4.5643	1.9782	1.4271	1.1312	0.9390	0.8019	0.6985	0.6173	0.5518
200										2.3755	1.6094	1.2483	1.0245	0.8688	0.7531	0.6633	0.5914

I/Ib Es (%)	1.85	1.90	1.95	2.00	2.20	2.40	2.60	2.80	3.00	3.20	3.40	3.60	3.80	4.00	4.20	4.40	4.60
105	0.0209	0.0193	0.0180	0.0168	0.0131	0.0106	0.0087	0.0073	0.0063	0.0054	0.0047	0.0042	0.0037	0.0033	0.0030	0.0027	0.0025
110	0.0422	0.0391	0.0363	0.0339	0.0264	0.0212	0.0175	0.0147	0.0126	0.0109	0.0095	0.0084	0.0075	0.0067	0.0060	0.0055	0.0050
115	0.0639	0.0592	0.0550	0.0513	0.0398	0.0320	0.0264	0.0222	0.0189	0.0164	0.0143	0.0126	0.0112	0.0101	0.0091	0.0082	0.0075
120	0.0862	0.0797	0.0740	0.0690	0.0535	0.0429	0.0353	0.0297	0.0253	0.0219	0.0191	0.0169	0.0150	0.0134	0.0121	0.0110	0.0100
125	0.1089	0.1007	0.0934	0.0870	0.0673	0.0540	0.0444	0.0372	0.0317	0.0274	0.0240	0.0211	0.0188	0.0168	0.0151	0.0137	0.0125
130	0.1322	0.1221	0.1132	0.1054	0.0813	0.0651	0.0535	0.0449	0.0382	0.0330	0.0288	0.0254	0.0226	0.0202	0.0182	0.0165	0.0150
135	0.1560	0.1440	0.1334	0.1241	0.0956	0.0764	0.0627	0.0525	0.0447	0.0386	0.0337	0.0297	0.0264	0.0236	0.0213	0.0192	0.0175
140	0.1805	0.1664	0.1540	0.1431	0.1100	0.0878	0.0720	0.0603	0.0513	0.0443	0.0386	0.0340	0.0302	0.0270	0.0243	0.0220	0.0200
145	0.2055	0.1892	0.1750	0.1625	0.1246	0.0993	0.0813	0.0681	0.0579	0.0499	0.0435	0.0384	0.0341	0.0305	0.0274	0.0248	0.0226
150	0.2312	0.2127	0.1965	0.1823	0.1395	0.1110	0.0908	0.0759	0.0645	0.0556	0.0485	0.0427	0.0379	0.0339	0.0305	0.0276	0.0251
155	0.2575	0.2366	0.2185	0.2025	0.1546	0.1228	0.1004	0.0838	0.0712	0.0614	0.0535	0.0471	0.0418	0.0374	0.0336	0.0304	0.0277
160	0.2846	0.2612	0.2409	0.2231	0.1699	0.1347	0.1100	0.0918	0.0780	0.0671	0.0585	0.0515	0.0457	0.0408	0.0367	0.0332	0.0302
165	0.3124	0.2864	0.2639	0.2442	0.1855	0.1468	0.1197	0.0999	0.0847	0.0729	0.0635	0.0559	0.0496	0.0443	0.0398	0.0360	0.0328
170	0.3410	0.3122	0.2874	0.2657	0.2012	0.1591	0.1296	0.1080	0.0916	0.0788	0.0686	0.0603	0.0535	0.0478	0.0430	0.0389	0.0353
175	0.3705	0.3388	0.3115	0.2877	0.2173	0.1715	0.1395	0.1161	0.0984	0.0847	0.0737	0.0648	0.0574	0.0513	0.0461	0.0417	0.0379
180	0.4008	0.3660	0.3361	0.3102	0.2336	0.1840	0.1495	0.1244	0.1054	0.0906	0.0788	0.0692	0.0614	0.0548	0.0493	0.0446	0.0405
185	0.4321	0.3940	0.3614	0.3331	0.2502	0.1967	0.1597	0.1327	0.1123	0.0965	0.0839	0.0737	0.0653	0.0583	0.0524	0.0474	0.0431
190	0.4644	0.4229	0.3873	0.3567	0.2671	0.2096	0.1699	0.1411	0.1193	0.1025	0.0891	0.0782	0.0693	0.0619	0.0556	0.0503	0.0457
195	0.4978	0.4525	0.4140	0.3808	0.2842	0.2226	0.1802	0.1495	0.1264	0.1085	0.0943	0.0828	0.0733	0.0654	0.0588	0.0531	0.0483
200	0.5324	0.4831	0.4413	0.4055	0.3017	0.2358	0.1907	0.1581	0.1335	0.1145	0.0995	0.0873	0.0773	0.0690	0.0620	0.0560	0.0509

Thermal overload for machines
ANSI code 49RMS
Tripping curves

Hot curves

I/Ib Es (%)	4.80	5.00	5.50	6.00	6.50	7.00	7.50	8.00	8.50	9.00	9.50	10.00	12.50	15.00	17.50	20.00
105	0.0023	0.0021	0.0017	0.0014	0.0012	0.0010	0.0009	0.0008	0.0007	0.0006	0.0006	0.0005	0.0003	0.0002	0.0002	0.0001
110	0.0045	0.0042	0.0034	0.0029	0.0024	0.0021	0.0018	0.0016	0.0014	0.0013	0.0011	0.0010	0.0006	0.0004	0.0003	0.0003
115	0.0068	0.0063	0.0051	0.0043	0.0036	0.0031	0.0027	0.0024	0.0021	0.0019	0.0017	0.0015	0.0010	0.0007	0.0005	0.0004
120	0.0091	0.0084	0.0069	0.0057	0.0049	0.0042	0.0036	0.0032	0.0028	0.0025	0.0022	0.0020	0.0013	0.0009	0.0007	0.0005
125	0.0114	0.0105	0.0086	0.0072	0.0061	0.0052	0.0045	0.0040	0.0035	0.0031	0.0028	0.0025	0.0016	0.0011	0.0008	0.0006
130	0.0137	0.0126	0.0103	0.0086	0.0073	0.0063	0.0054	0.0048	0.0042	0.0038	0.0034	0.0030	0.0019	0.0013	0.0010	0.0008
135	0.0160	0.0147	0.0120	0.0101	0.0085	0.0073	0.0064	0.0056	0.0049	0.0044	0.0039	0.0035	0.0023	0.0016	0.0011	0.0009
140	0.0183	0.0168	0.0138	0.0115	0.0097	0.0084	0.0073	0.0064	0.0056	0.0050	0.0045	0.0040	0.0026	0.0018	0.0013	0.0010
145	0.0206	0.0189	0.0155	0.0129	0.0110	0.0094	0.0082	0.0072	0.0063	0.0056	0.0051	0.0046	0.0029	0.0020	0.0015	0.0011
150	0.0229	0.0211	0.0172	0.0144	0.0122	0.0105	0.0091	0.0080	0.0070	0.0063	0.0056	0.0051	0.0032	0.0022	0.0016	0.0013
155	0.0253	0.0232	0.0190	0.0158	0.0134	0.0115	0.0100	0.0088	0.0077	0.0069	0.0062	0.0056	0.0035	0.0025	0.0018	0.0014
160	0.0276	0.0253	0.0207	0.0173	0.0147	0.0126	0.0109	0.0096	0.0085	0.0075	0.0067	0.0061	0.0039	0.0027	0.0020	0.0015
165	0.0299	0.0275	0.0225	0.0187	0.0159	0.0136	0.0118	0.0104	0.0092	0.0082	0.0073	0.0066	0.0042	0.0029	0.0021	0.0016
170	0.0323	0.0296	0.0242	0.0202	0.0171	0.0147	0.0128	0.0112	0.0099	0.0088	0.0079	0.0071	0.0045	0.0031	0.0023	0.0018
175	0.0346	0.0317	0.0260	0.0217	0.0183	0.0157	0.0137	0.0120	0.0106	0.0094	0.0084	0.0076	0.0048	0.0034	0.0025	0.0019
180	0.0370	0.0339	0.0277	0.0231	0.0196	0.0168	0.0146	0.0128	0.0113	0.0101	0.0090	0.0081	0.0052	0.0036	0.0026	0.0020
185	0.0393	0.0361	0.0295	0.0246	0.0208	0.0179	0.0155	0.0136	0.0120	0.0107	0.0096	0.0086	0.0055	0.0038	0.0028	0.0021
190	0.0417	0.0382	0.0313	0.0261	0.0221	0.0189	0.0164	0.0144	0.0127	0.0113	0.0101	0.0091	0.0058	0.0040	0.0030	0.0023
195	0.0441	0.0404	0.0330	0.0275	0.0233	0.0200	0.0173	0.0152	0.0134	0.0119	0.0107	0.0096	0.0061	0.0043	0.0031	0.0024
200	0.0464	0.0426	0.0348	0.0290	0.0245	0.0211	0.0183	0.0160	0.0141	0.0126	0.0113	0.0102	0.0065	0.0045	0.0033	0.0025

Breaker failure
ANSI code 50BF

Backup protection if the circuit breaker does not trip.

Description

If a breaker fails to open following a tripping order (detected by the non-extinction of the fault current), this backup protection sends a tripping order to the upstream or adjacent breakers.
The "breaker failure" protection function is activated by an O1 output tripping order received from the overcurrent protection functions which trip the circuit breaker (50/51, 50N/51N, 46, 67N, 67, 64REF). It checks for the disappearance of current during the time interval specified by the time delay T. It may also take into account the position of the circuit breaker, read on the logic inputs to determine the actual opening of the breaker. Wiring a volt-free closed circuit breaker position contact on the "breaker closed" equation editor input can ensure that the protection is effective in the following situations:
■ When 50BF is activated by protection function 50N/51N (set point Is0 < 0.2 In), detection of the 50BF current set point can possibly not be operational.
■ When trip circuit supervision (TCS) is used, the closed circuit breaker contact is short-circuited. Logic input I101 is therefore no longer operational.
Automatic activation of this protection function requires the use of the circuit breaker control function in the control logic. A specific input may also be used to activate the protection by logic equation. That option is useful for adding special cases of activation (e.g. tripping by an external protection unit).
The time-delayed output of the protection function should be assigned to a logic output via the control matrix.
Starting and stopping of the time delay T counter are conditioned by the presence of a current above the set point (I > Is).

Block diagram

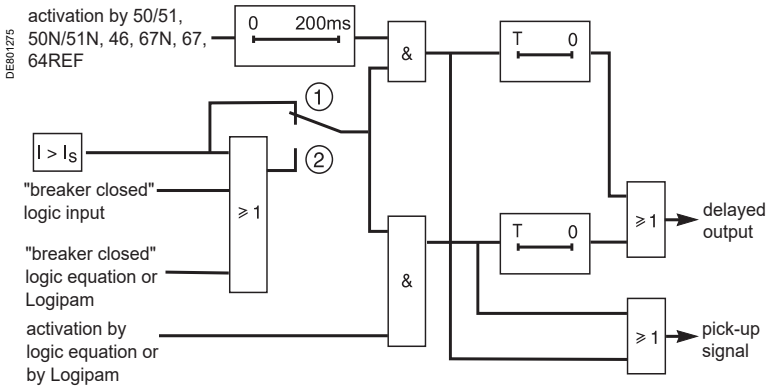

Setting: (1) Not accounting for the circuit breaker position
(2) Accounting for the circuit breaker position

Breaker failure
ANSI code 50BF

Characteristics

Settings			
Is set point			
Setting range	0.2 In to 2 In		
Accuracy (1)	±5 %		
Resolution	0.1 A		
Drop out/pick up ratio	87.5 % ±2 %		
Time delay T			
Setting range	50 ms to 3 s		
Accuracy (1)	±2 % or -10 ms to +15 ms		
Resolution	10 ms or 1 digit		
Taking into account circuit breaker position			
Setting range	With / without		
Characteristic times			
Overshoot time	< 35 ms at 2 Is		
Inputs			
Designation	**Syntax**	**Equations**	
Protection reset	P50BF_1_101	■	
Start 50BF	P50BF_1_107	■	
Protection inhibition	P50BF_1_113	■	
Breaker closed	P50BF_1_119	■	
Outputs			
Designation	**Syntax**	**Equations**	**Matrix**
Instantaneous output (pick-up)	P50BF_1_1	■	
Delayed output	P50BF_1_3	■	■
Protection inhibited	P50BF_1_16	■	

(1) *Under reference conditions (IEC 60255-6).*

Example of setting

Below is a case that may be used to determine the time-delay setting of the breaker failure function:
- overcurrent protection setting: T = inst
- circuit breaker operating time: 60 ms
- auxiliary relay operating time to open the upstream breaker(s): 10 ms.

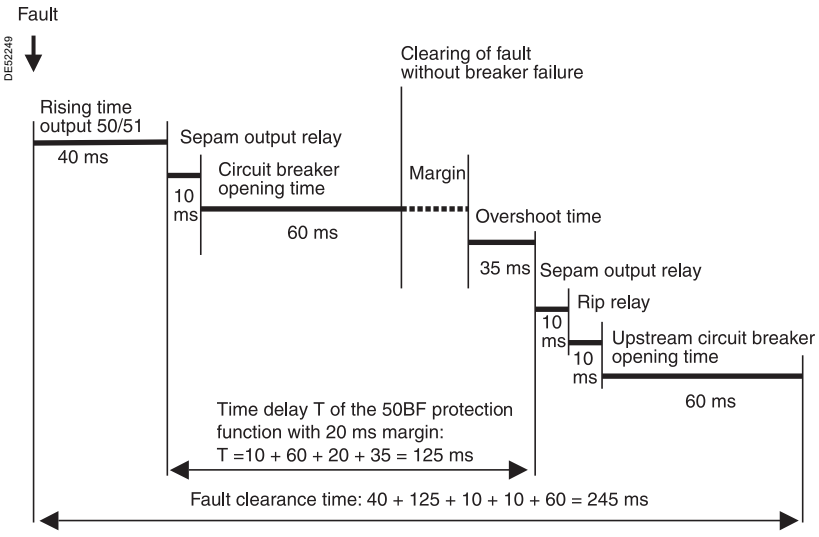

The breaker failure function time delay is the sum of the following times:
- Sepam O1 output relay pick-up time = 10 ms
- circuit breaker opening time = 60 ms
- Breaker failure function overshoot time = 35 ms.

To avoid unwanted tripping of the upstream breakers, add a margin of approximately 20 ms.
The time delay is 125 ms minimum, set at 130 ms.

Phase overcurrent
ANSI code 50/51

Protection against overcurrents and overloads.

Operation

Protection against overcurrents or overloads:
- It is three-phase and includes a time delay, which is either definite or IDMT.
- Each of the 8 relays has 2 groups of settings. The setting group A or B can be switched by a logic input or a remote control order depending on the parameter setting.
- For better detection of faraway faults, protection can be confirmed by unit 1 of one of the following protections:
  - undervoltage
  - negative sequence overvoltage.
- The custom curve, defined point by point, can be used with this protection.
- An adjustable timer hold delay, either definite or IDMT, allows coordination with electromechanical relays and detection of reboot faults.
- The protection incorporates a harmonic 2 restraint which can be used to set the protection Is set point close to the rated current of the device to be protected, for example to avoid transformer inrush currents.

This harmonic 2 restraint, which can be selected by parameter setting, is active as long as the current is less than half the minimum short-circuit current of the network downstream of the device to be protected.

Tripping curve	Timer hold
Definite time (DT)	Definite time
Standard inverse time (SIT)	Definite time
Very inverse time (VIT or LTI)	Definite time
Extremely inverse time (EIT)	Definite time
Ultra inverse time (UIT)	Definite time
RI curve	Definite time
IEC inverse time SIT / A	Definite time or IDMT
IEC very inverse time VIT or LTI / B	Definite time or IDMT
IEC extremely inverse time EIT / C	Definite time or IDMT
IEEE moderately inverse (IEC / D)	Definite time or IDMT
IEEE very inverse (IEC / E)	Definite time or IDMT
IEEE extremely inverse (IEC / F)	Definite time or IDMT
IAC inverse	Definite time or IDMT
IAC very inverse	Definite time or IDMT
IAC extremely inverse	Definite time or IDMT
Customized	Definite time

Block diagram

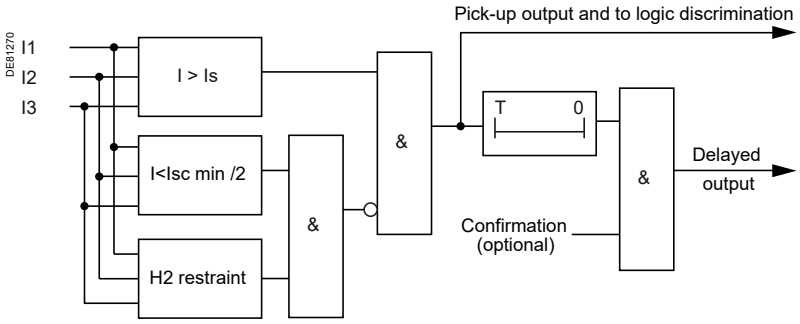

Phase overcurrent
ANSI code 50/51

Characteristics

Settings		
Tripping curve		
Setting range	See previous page	
Is set point		
Setting range	Definite time	0.05 In ⩽ Is ⩽ 24 In expressed in amperes
	IDMT	0.05 In ⩽ Is ⩽ 2.4 In expressed in amperes
Accuracy (1)	±5 % or ±0.01 In	
Resolution	1 A or 1 digit	
Drop out/pick up ratio	93.5 % ±5 % or > (1 - 0.015 In/Is) x 100 %	
Time delay T (operation time at 10 Is)		
Setting range	Definite time	Inst, 50 ms ⩽ T ⩽ 300 s
	IDMT	100 ms ⩽ T ⩽ 12.5 s or TMS (2)
Accuracy (1)	Definite time	±2 % or from -10 ms to +25 ms
	IDMT	Class 5 or from -10 ms to +25 ms
Resolution	10 ms or 1 digit	
Advanced settings		
Confirmation		
Setting range	By undervoltage (unit 1) By negative sequence overvoltage (unit 1) None, no confirmation	
Timer hold T1		
Setting range	Definite time	0; 0.05 to 300 s
	IDMT (3)	0.5 to 20 s
Resolution	10 ms or 1 digit	
Harmonic 2 restraint		
Setting range	5 to 50 %	
Resolution	1 %	
Minimum short-circuit current Isc		
Setting range	In to 999 kA	
Resolution	de 1 to 9.99 de 10 to 99.9 de 100 to 999 Minimum interval	0.01 0.1 1 0.1A
Characteristic times		
Operation time	pick-up < 40 ms at 2 Is (typically 25 ms) confirmed instantaneous: ■ inst. < 55 ms at 2 Is for Is ⩾ 0.3 In (typically 35 ms) ■ inst. < 70 ms at 2 Is for Is < 0.3 In (typically 50 ms)	
Overshoot time	< 50 ms at 2 Is	
Reset time	< 50 ms at 2 Is (for T1 = 0)	

Inputs			
Designation	**Syntax**	**Equations**	
Protection reset	P50/51_x_101	■	
Protection inhibition	P50/51_x_113	■	

Outputs			
Designation	**Syntax**	**Equations**	**Matrix**
Instantaneous output (pick-up)	P50/51_x_1	■	
Delayed output	P50/51_x_3	■	■
Drop out	P50/51_x_4	■	
Phase 1 fault	P50/51_x_7	■	
Phase 2 fault	P50/51_x_8	■	
Phase 3 fault	P50/51_x_9	■	
Protection inhibited	P50/51_x_16	■	

x: unit number.
***(1)** Under reference conditions (IEC 60255-6).*
***(2)** Setting ranges in TMS (Time Multiplier Setting) mode*
- *Inverse (SIT) and IEC SIT/A: 0.04 to 4.20*
- *Very inverse (VIT) and IEC VIT/B: 0.07 to 8.33*
- *Very inverse (LTI) and IEC LTI/B: 0.01 to 0.93*
- *Ext. inverse (EIT) and IEC EIT/C: 0.13 to 15.47*
- *IEEE moderately inverse: 0.42 to 51.86*
- *IEEE very inverse: 0.73 to 90.57*
- *IEEE extremely inverse: 1.24 to 154.32*
- *IAC inverse: 0.34 to 42.08*
- *IAC very inverse: 0.61 to 75.75*
- *IAC extremely inverse: 1.08 to 134.4.*

***(3)** Only for standardized tripping curves of the IEC, IEEE and IAC types.*

Earth fault
ANSI code 50N/51N or 50G/51G

Protection against earth faults.

Description

Earth fault protection based on measured neutral, zero sequence or earth fault (tank earth leakage protection) current:

■ the protection function has a definite or IDMT time delay.

■ each of the eight units has two groups of settings. Switching to setting group A or B can be carried out by a logic input or a remote control order, depending on the settings.

■ The protection function includes a harmonic 2 restraint which can be set to provide greater saturation stability of the CT phases when transformers are energized. When the residual current measurement is done by adding up to 3 TC phases or by an intermediate TC located in the common point of the 3 TC phases, the harmonic 2 restraint must be active with:

□ Iso > 10 % of In TC, if the protection is time-dependant (DT),

□ Iso > 5 % of IN TC, if the protection is IDMT.

■ the customized curve, defined point by point, can be used with this protection function.

■ an adjustable timer hold, definite or IDMT, can be used for coordination with electromagnetic relays and to detect restriking faults.

■ each unit can be independently set to one of the two measurement channels I0 or I'0 or to the sum of the phase currents on the main or additional channels. By mixing the possibilities on the different units, it is possible to have:

□ different dynamic set points

□ different applications, e.g. zero sequence and tank earth leakage protection.

Tripping curve	Timer hold curve
Definite time (DT)	Definite time
Standard inverse time (SIT)	Definite time
Very inverse time (VIT or LTI)	Definite time
Extremely inverse time (EIT)	Definite time
Ultra inverse time (UIT)	Definite time
RI curve	Definite time
IEC inverse time SIT / A	Definite time or IDMT
IEC very inverse time VIT or LTI / B	Definite time or IDMT
IEC extremely inverse time EIT / C	Definite time or IDMT
IEEE moderately inverse (IEC / D)	Definite time or IDMT
IEEE very inverse (IEC / E)	Definite time or IDMT
IEEE extremely inverse (IEC / F)	Definite time or IDMT
IAC inverse	Definite time or IDMT
IAC very inverse	Definite time or IDMT
IAC extremely inverse	Definite time or IDMT
EPATR-B	Definite time
EPATR-C	Definite time
Customized	Definite time

Block diagram

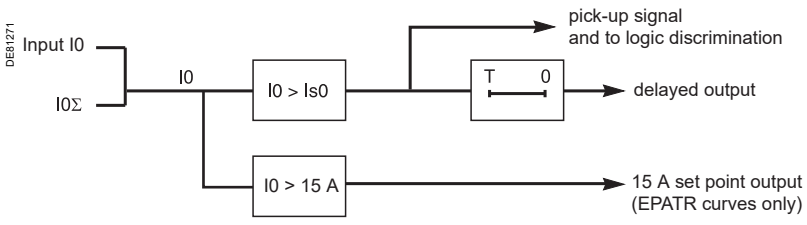

Earth fault
ANSI code 50N/51N or 50G/51G

Characteristics

Settings		
Measurement origin		
Setting range	I0 I0Σ	
Tripping curve		
Setting range	See previous page	
Is0 setting		
Definite time setting range	0.01 In0 ⩽ Is0 ⩽ 15 In0 (min. 0.1 A) expressed in amperes	
	Sum of CTs	0.01 In ⩽ Is0 ⩽ 15 In (min. 0.1 A)
	With CSH sensor 2 A rating 20 A rating	 0.1 to 30 A 0.2 to 300 A
	CT	0.01 In0 ⩽ Is0 ⩽ 15 In0 (min. 0.1 A)
	Core balance CT + ACE990	0.01 In0 ⩽ Is0 ⩽ 15 In0 (min. 0.1 A)
IDMT setting range	0.01 In0 ⩽ Is0 ⩽ In0 (min. 0.1 A) expressed in amperes	
	Sum of CTs	0.01 In ⩽ Is0 ⩽ In (min. 0.1 A)
	With CSH sensor 2 A rating 20 A rating	 0.1 to 2 A 0.2 to 20 A
	CT	0.01 In0 ⩽ Is0 ⩽ In0 (min. 0.1 A)
	Core balance CT + ACE990	0.01 In0 ⩽ Is0 ⩽ In0 (min. 0.1 A)
EPATR Setting range	CSH sensor 20 A rating	0.6 to 5 A
	Core balance CT with ACE990 and 15 A ⩽ In0 ⩽ 50 A	0.6 to 5 A
Accuracy (1)	±5 % or ±0.004 In0	
Resolution	1 A or 1 digit	
Drop out/pick up ratio	93.5 % ±5 % or > (1 - 0.005 In0/Is0) x 100 %	
Time delay T (operation time at 10 Is0)		
Setting range	Definite time	Inst, 50 ms ⩽ T ⩽ 300 s
	IDMT	100 ms ⩽ T ⩽ 12.5 s or TMS (2)
	EPATR-B	0.5 to 1 s
	EPATR-C	0.1 to 3 s
Accuracy (1)	Definite time	±2 % or from -10 ms to +25 ms
	IDMT	Class 5 or from -10 ms to +25 ms
Resolution	10 ms or 1 digit	
Advanced settings		
Harmonic 2 restraint		
Fixed threshold	17 % ±3 %	
Timer hold T1		
Setting range	Definite time	0; 0.05 to 300 s
	IDMT (3)	0.5 to 20 s
Resolution	10 ms or 1 digit	
Overshoot time	< 40 ms at 2 Is0	
Reset time	< 50 ms at 2 Is0 (for T1 = 0)	
Characteristic times		
Operation time	Pick-up < 40 ms at 2 Is0 (typically 25 ms) Confirmed instantaneous: ■ inst < 55 ms at 2 Is0 for Is ⩾ 0.3 In0 (typically 35 ms) ■ inst < 70 ms at 2 Is0 for Is < 0.3 In0 (typically 50 ms)	
Overshoot time	< 40 ms at 2 Is0	
Reset time	< 50 ms at 2 Is0 (for T1 = 0)	

Inputs

Designation	Syntax	Equations
Protection reset	P50N/51N_x_101	■
Protection inhibition	P50N/51N_x_113	■

Outputs

Designation	Syntax	Equations	Matrix
Instantaneous output (pick-up)	P50N/51N_x_1	■	
Delayed output	P50N/51N_x_3	■	■
Drop out	P50N/51N_x_4	■	
Protection inhibited	P50N/51N_x_16	■	
15 A set point output	P50N/51N_x_56	■	

x: unit number.

***(1)** Under reference conditions (IEC 60255-6).*

***(2)** Setting ranges in TMS (Time Multiplier Setting) mode*

- *Inverse (SIT) and IEC SIT/A: 0.04 to 4.20*
- *Very inverse (VIT) and IEC VIT/B: 0.07 to 8.33*
- *Very inverse (LTI) and IEC LTI/B: 0.01 to 0.93*
- *Ext. inverse (EIT) and IEC EIT/C: 0.13 to 15.47*
- *IEEE moderately inverse: 0.42 to 51.86*
- *IEEE very inverse: 0.73 to 90.57*
- *IEEE extremely inverse: 1.24 to 154.32*
- *IAC inverse: 0.34 to 42.08*
- *IAC very inverse: 0.61 to 75.75*
- *IAC extremely inverse: 1.08 to 134.4.*

***(3)** Only for standardized tripping curves of the IEC, IEEE and IAC types.*

Earth fault
ANSI code 50N/51N or 50G/51G

EPATR-B curves

EPATR-B tripping curves are defined from the following equations:

- for Is0 ⩽ I0 ⩽ 6.4 A $\quad t = \frac{85{,}386}{I0^{0,(708)}} \times \frac{T}{0{,}8}$
- for 6.4 A ⩽ I0 ⩽ 200 A $\quad t = \frac{140{,}213}{I0^{0{,}975}} \times \frac{T}{0{,}8}$
- for I0 > 200 A $\quad t = T$

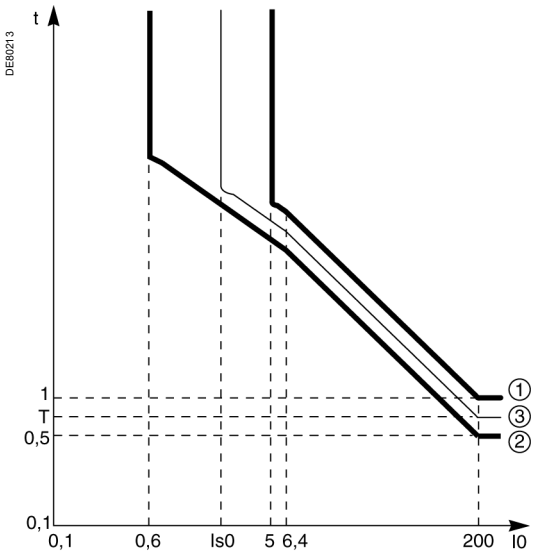

EPATR-B standard curve (log scales)

Curve ① : Is0 = 5 A and T = 1 s
Curve ② : Is0 = 0.6 A and T = 0.5 s
Curve ③ : Is0 and T

EPATR-C curves

EPATR-C tripping curves are defined from the following equations:

- for Is0 ⩽ I0 ⩽ 200 A $\quad t = \frac{72}{I0^{2/3}} \times \frac{T}{2{,}10}$
- for I0 > 200 A $\quad t = T$

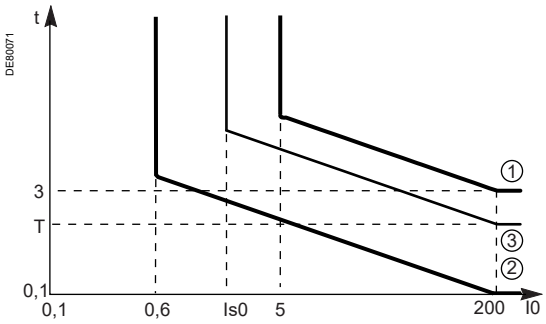

EPATR-C standard curve (log scales)

Curve ① : Is0 = 5 A and T = 3 s
Curve ② : Is0 = 0.6 A and T = 0.1 s
Curve ③ : Is0 and T

Voltage-restrained overcurrent
ANSI code 50V/51V

Generator protection against close short-circuits.

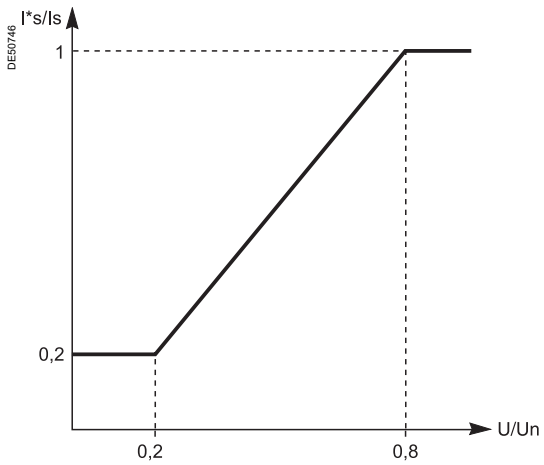

Set point adjustment.

Description

The voltage-restrained overcurrent protection function is used to protect generators. The operation set point is adjusted according to the voltage to take into account cases of faults close to the generator which cause voltage dips and short-circuit current:

- the protection function is three-phase and has a definite or IDMT time delay
- the customized curve, defined point by point, may be used with this protection function
- an adjustable timer hold, definite time or IDMT, can be used for coordination with electromagnetic relays and to detect restriking faults
- the set point is adjusted according to the lowest of the phase-to-phase voltages measured. The adjusted set point I_s^* is defined by the following equation:

$$I_s^* = \frac{Is}{3} \times \left(4\frac{U}{Un} - 0.2\right)$$

Tripping curve	Timer hold
Definite time (DT)	Definite time
Standard inverse time (SIT)	Definite time
Very inverse time (VIT or LTI)	Definite time
Extremely inverse time (EIT)	Definite time
Ultra inverse time (UIT)	Definite time
RI curve	Definite time
IEC inverse time SIT / A	Definite time or IDMT
IEC very inverse time VIT or LTI / B	Definite time or IDMT
IEC extremely inverse time EIT / C	Definite time or IDMT
IEEE moderately inverse (IEC / D)	Definite time or IDMT
IEEE very inverse (IEC / E)	Definite time or IDMT
IEEE extremely inverse (IEC / F)	Definite time or IDMT
IAC inverse	Definite time or IDMT
IAC very inverse	Definite time or IDMT
IAC extremely inverse	Definite time or IDMT
Customized	Definite time

Block diagram

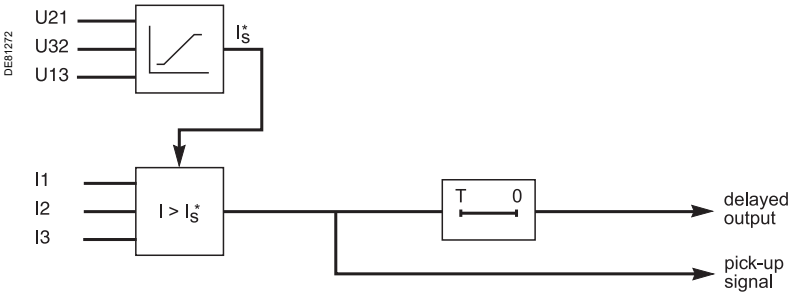

Voltage-restrained overcurrent
ANSI code 50V/51V

Characteristics

Settings		
Tripping curve		
Setting range	See previous page	
Is set point		
Setting range	Definite time	0.5 In ⩽ Is ⩽ 24 In expressed in amperes
	IDMT	0.5 In ⩽ Is ⩽ 2.4 In expressed in amperes
Accuracy (1)	±5 %	
Resolution	1 A or 1 digit	
Drop out/pick up ratio	93.5 % (with min. reset variance of 0.015 In)	
Time delay T (operation time at 10 Is)		
Setting range	Definite time	Inst, 50 ms ⩽ T ⩽ 300 s
	IDMT	100 ms ⩽ T ⩽ 12.5 s or TMS (2)
Accuracy (1)	Definite time	±2 % or from -10 ms to +25 ms
	IDMT	Class 5 or from -10 ms to +25 ms
Resolution	10 ms or 1 digit	
Advanced settings		
Timer hold T1		
Setting range	Definite time	0; 0.05 to 300 s
	IDMT time (3)	0.5 to 20 s
Resolution	10 ms or 1 digit	
Characteristic times		
Operation time	pick-up < 35 ms at 2 Is (typically 25 ms) Inst. < 50 ms at 2 Is (confirmed instantaneous) (typically 35 ms)	
Overshoot time	< 50 ms	
Reset time	< 50 ms (for T1 = 0)	

Inputs			
Designation	**Syntax**	**Equations**	
Protection reset	P50V/51V_x_101	■	■
Protection inhibition	P50V/51V_x_113	■	■

Outputs			
Designation	**Syntax**	**Equations**	**Matrix**
Instantaneous output (pick-up)	P50V/51V_x_1	■	
Delayed output	P50V/51V_x_3	■	■
Drop out	P50V/51V_x_4	■	
Phase 1 fault	P50V/51V_x_7	■	
Phase 2 fault	P50V/51V_x_8	■	
Phase 3 fault	P50V/51V_x_9	■	
Protection inhibited	P50V/51V_x_16	■	

x: unit number.
***(1)** Under reference conditions (IEC 60255-6).*
***(2)** Setting ranges in TMS (Time Multiplier Setting) mode*
- *Inverse (SIT) and IEC SIT/A: 0.04 to 4.20*
- *Very inverse (VIT) and IEC VIT/B: 0.07 to 8.33*
- *Very inverse (LTI) and IEC LTI/B: 0.01 to 0.93*
- *Ext. inverse (EIT) and IEC EIT/C: 0.13 to 15.47*
- *IEEE moderately inverse: 0.42 to 51.86*
- *IEEE very inverse: 0.73 to 90.57*
- *IEEE extremely inverse: 1.24 to 154.32*
- *IAC inverse: 0.34 to 42.08*
- *IAC very inverse: 0.61 to 75.75*
- *IAC extremely inverse: 1.08 to 134.4.*

***(3)** Only for standardized tripping curves of the IEC, IEEE and IAC types.*

Overvoltage (L-L or L-N)
ANSI code 59

Protection against phase-to-neutral or phase-to-phase overvoltages.

Operation

Protection against overvoltages or check that there is sufficient voltage present to authorize a source transfer:
- it is single-phase and operates on phase-to-neutral or phase-to-phase voltage
- it includes a time delay T with definite time
- when operating on phase-to-neutral voltage, it indicates the faulty phase in the alarm associated with the fault.

Whether it operates on phase-to-neutral or phase-to-phase voltage depends on the connection chosen for the voltage inputs.

Block diagram

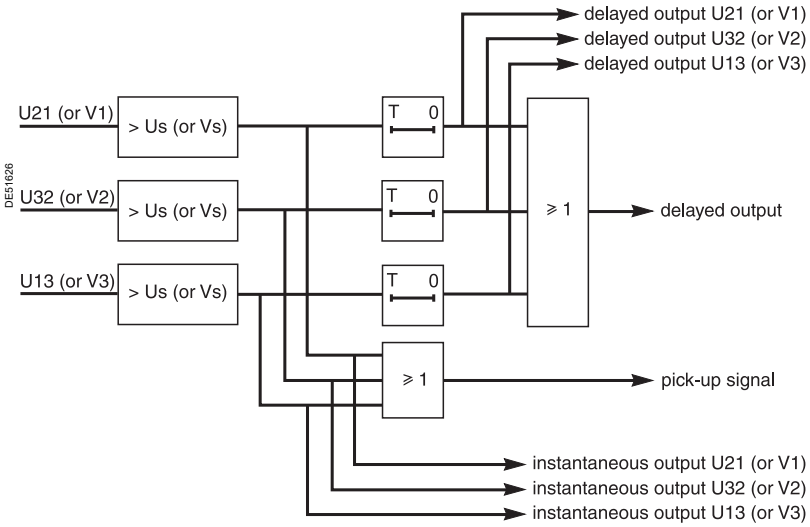

Connection conditions					
Type of connection	V1, V2, V3 (1)	U21, U32 + V0	U21, U32	U21 (1)	V1 (1)
Phase-to-neutral operation	YES	YES	NO	NO	On V1 only
Phase-to-phase operation	YES	YES	YES	On U21 only	NO

(1) *With or without V0.*

Overvoltage (L-L or L-N)
ANSI code 59

Characteristics

Settings			
Voltage mode			
Setting range	Phase-to-phase voltage / Phase-to-neutral voltage		
Us (or Vs) set point			
Setting range	50 % to 150 % of Unp (or Vnp) if Uns < 208 V		
	50 % to 135 % of Unp (or Vnp) if Uns ≥ 208 V		
Accuracy (1)	±2 %		
Resolution	1 %		
Drop out/pick up ratio	97 % ±1 %		
Drop-out/pick-up ratio			
Setting range	97 % to 99 %		
Accuracy	1 %		
Resolution	0,1 %		
Time delay T			
Setting range	50 ms to 300 s		
Accuracy (1)	±2 % or ±25 ms		
Resolution	10 ms or 1 digit		
Characteristic times			
Operation time	Pick-up < 40 ms from 0.9 Us (Vs) to 1.1 Us (Vs) (typically 25 ms)		
Overshoot time	< 40 ms from 0.9 Us (Vs) to 1.1 Us (Vs)		
Reset time	< 50 ms from 1.1 Us (Vs) to 0.9 Us (Vs)		
Inputs			
Designation	**Syntax**	**Equations**	
Protection reset	P59_x_101	■	
Protection inhibition	P59_x_113	■	
Outputs			
Designation	**Syntax**	**Equations**	**Matrix**
Instantaneous output (pick-up)	P59_x_1	■	
Delayed output	P59_x_3	■	■
Fault phase 1 (2)	P59_x_7	■	
Fault phase 2 (2)	P59_x_8	■	
Fault phase 3 (2)	P59_x_9	■	
Protection inhibited	P59_x_16	■	
Instantaneous output V1 or U21	P59_x_23	■	
Instantaneous output V2 or U32	P59_x_24	■	
Instantaneous output V3 or U13	P59_x_25	■	
Delayed output V1 or U21	P59_x_26	■	
Delayed output V2 or U32	P59_x_27	■	
Delayed output V3 or U13	P59_x_28	■	

x: unit number.
***(1)** Under reference conditions (IEC 60255-6).*
***(2)**When the protection function is used for phase-to-neutral voltage.*

Neutral voltage displacement
ANSI code 59N

Protection against insulation faults

Description

Protection against insulation faults by measuring the residual voltage V0 or the neutral point voltage Vnt for generators and motors.
The residual voltage is obtained by the vector sum of the phase voltages or by measurements using delta connected VTs.
The neutral point voltage is measured by a VT inserted in the neutral point of the generator or the motor.
The protection function includes a time delay T, either definite or IDMT (dependent on the residual voltage V0) (see tripping curve equation on page 185).
It operates only when a residual or neutral point voltage is available, by connecting V1V2V3, V0 or Vnt.

Block diagram

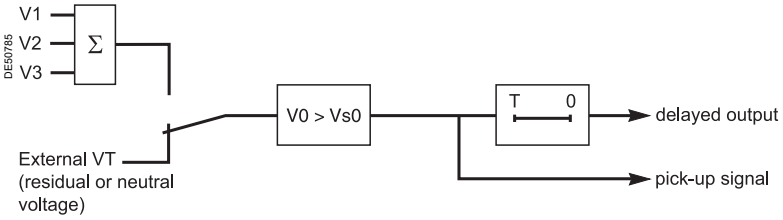

Characteristics

Settings			
Measurement origin			
Setting range	Main channels (V0) Neutral-point voltage (Vnt)		
Tripping curve			
Setting range	Definite time IDMT (dependent on the residual voltage V0)		
Vs0 set point			
Definite time setting range	2 % Unp to 80 % Unp (for residual voltage V0) 2 % Vntp to 80 % Vntp (for neutral point voltage Vnt)		
IDMT setting range	2 % Unp to 10 % Unp (for residual voltage V0) 2 % Vntp to 10 % Vntp (for neutral point voltage Vnt)		
Accuracy (1)	±2 % or 0.005 Unp		
Resolution	1 %		
Drop out/pick up ratio	97 % ±2 % or > (1 - 0.006 Unp/Vs0) x 100 %		
Time delay T (tripping time at 2 Vs0)			
Definite time setting range	50 ms to 300 s		
IDMT setting range	100 ms to 10 s		
Accuracy (1)	±5 % or ±25 ms		
Resolution	10 ms or 1 digit		
Characteristic times			
Operation time	pick-up < 45 ms (typically 25 ms) at 2 Vs0		
Overshoot time	< 40 ms at 2 Vs0		
Reset time	< 40 ms at 2 Vs0		
Inputs			
Designation	**Syntax**	**Equations**	
Protection reset	P59N_x_101	■	
Protection inhibition	P59N_x_113	■	
Outputs			
Designation	**Syntax**	**Equations**	**Matrix**
Instantaneous output (pick-up)	P59N_x_1	■	
Delayed output	P59N_x_3	■	■
Protection inhibited	P59N_x_16	■	

x: unit number.
(1) *Under reference conditions (IEC 60255-6).*

Restricted earth fault differential
ANSI code 64REF

Protection of three-phase windings against phase-to-earth faults.

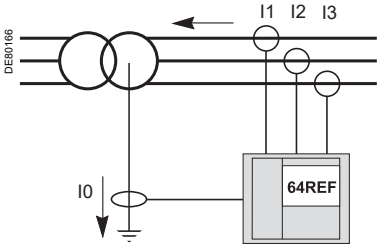

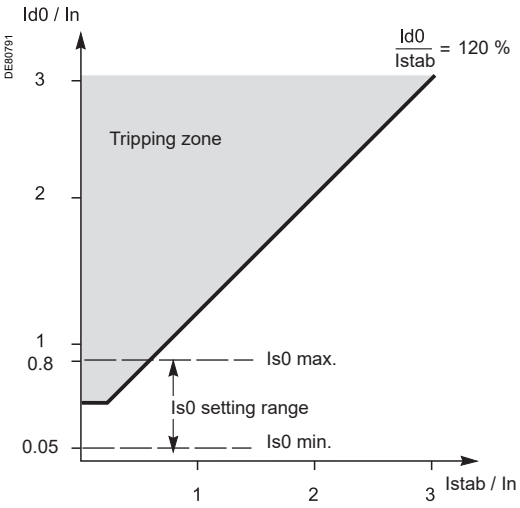

Description

The restricted earth fault protection function detects phase-to-earth faults on three-phase windings with earthed neutral. This function protects generators and transformers.
The protected zone is between the 3 phases CTs I1, I2, I3 and the neutral point current measurement I0.
The vector associated with the current sensors determines the conventional direction of connection.

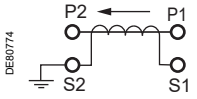

Principle

Protection is activated if the following 3 conditions are met:
- $\mathbf{Id0} > \mathbf{Is0}$
- $\mathbf{Id0} > \mathbf{1.2} \times \mathbf{Istab}$
- $\Delta\mathbf{I0} > \mathbf{min}(\mathbf{Is0/4},\ \mathbf{I0min})$

With:
- Id0: differential residual current
- Is0: adjustable trip set point of the protection function
- Istab: stabilization current
- ΔI0: variation of the neutral point current
- I0min: nominal current of the neutral point:
  - I0min = 0.05 x In0 si In0 > 20 A
  - I0min = 0.10 x In0 si In0 ≤20 A

Differential residual current Id0

$$\mathbf{Id0} = \left|\vec{\mathbf{I0}}\Sigma - \vec{\mathbf{I0}}\right|$$

With:
- $\vec{\mathbf{I0}}$: neutral point current
- $\vec{\mathbf{I0}}\Sigma$: residuel current calculated using the sum of the 3 phase currents

Stabilization current Istab

$$\mathbf{Istab}(\mathbf{k}) = \mathbf{max}(\mathbf{It}(\mathbf{k}),\ \alpha \cdot\ \mathbf{Istab}(\mathbf{k}-\mathbf{1}))$$

With:
- k: present moment
- k-1: previous moment in the 64REF protective processing cycle
- α: time constant adaptation coefficient of the time memory to cover dips in the through current It, when the CTs are saturated, on an external multi-phase fault
- It: through current

Through current It

The through current It provides the protection with discrimination and rendered immunity in relation to external multi-phase faults.

$$\mathbf{It} = \mathbf{max}(\mathbf{IR0},\ \beta \cdot\ \mathbf{IR1})$$

With:
- $\mathbf{IR0} = \left|\vec{\mathbf{I0}}\Sigma + \vec{\mathbf{I0}}\right| / \mathbf{2}$: residual component sensitive to single-phase faults
- $\mathbf{IR1} = |\mathbf{Id}| - |\mathbf{Ii}|$: component sensitive to multi-phase faults
- β : coefficient depending on the nature of the external fault:
  - $\beta = \mathbf{max}(\mathbf{2},\ |\mathbf{Id}| / \mathbf{Ib})$ for two-phase/earth or three-phase/earth faults
  - β = 0 for single-phase faults

Variation of the neutral point current ΔI0

The neutral point current variation is the difference in the absolute value between the neutral point current before and after the fault has been detected.

Restricted earth fault differential
ANSI code 64REF

Block diagram

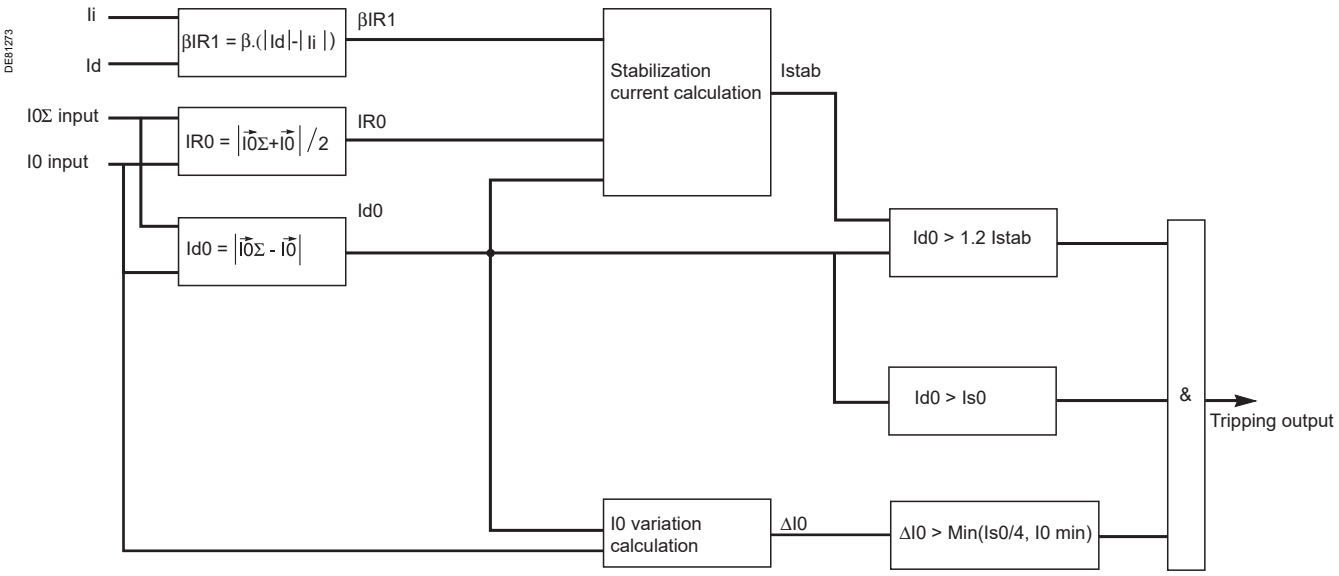

Additional protection on multi-phase faults

When multi-phase/internal earth faults occur, the 64REF protection may experience downgraded operation. The table below defines the usual additional protection for protecting the installation in the event of multi-phase/internal earth faults.

Application	Network diagram	Additional protections
Protection of an incomer on a: ■ Directly earthed, resistive or inductive MV network (1000 V < MV < 50 kV) ■ TN or TT type LV network (< 1000 V)	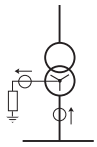	ANSI 50/51 at the primary
Protection of parallel incomers on a: ■ HV distribution network ■ Directly earthed, resistive or inductive MV network ■ TN or TT type LV network	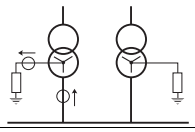	ANSI 67
Protection of a feeder on an HV(> 50 kV) distribution network	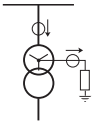	ANSI 50/51N at the neutral point
Protection of zero sequence generator on an MV network	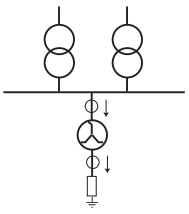	■ ANSI 50/51 or ■ ANSI 50N/51N
Generator protection, in which the neutral is earthed across a low impedance	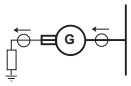	ANSI 50N/51N at the neutral point
Machine-transformer unit protection, in which the neutral is earthed across a low impedance	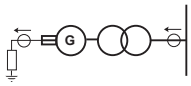	ANSI 50N/51N at the neutral point

Restricted earth fault differential
ANSI code 64REF

Dimensioning current sensors

■ The primary current of the neutral point current transformer must comply with the following rule:
In0 ⩾ 0.1 x I_{1P}, where I_{1P} is the phase-to-earth short-circuit current.

■ Neutral current transformer must be:

□ type 5P20 with an accuracy burden $VA_{CT} \geqslant Rw.in0^2$

□ or defined by a knee-point voltage $Vk \geqslant (R_{CT} + Rw).20.in0$.

■ Phase current transformers must be:

□ type 5P, with an accuracy-limit factor $FLP \geqslant \max\left(\mathbf{20},\ \mathbf{1.6}\frac{I_{3P}}{In},\ \mathbf{2.4}\frac{I_{1P}}{In}\right.$

and an accuracy burden $VA_{CT} \geqslant Rw.in^2$

□ or defined by a knee-point voltage $Vk \geqslant (R_{CT} + Rw) \max\left(\mathbf{20},\ \mathbf{1.6}\frac{I_{3P}}{In},\ \mathbf{2.4}\frac{I_{1P}}{In}\right.$in.

■ Formula legend:
in: phase CT rated secondary current
in0: neutral point CT rated secondary current
R_{CT}: phase CT or neutral CT internal resistance
Rw: resistance of the CT load and wiring
In: phase CT rated primary current
In0: neutral point CT rated primary current
I_{3P}: three-phase short-circuit current
I_{1P}: phase-to-earth short-circuit current

Characteristics

Settings			
Is0			
Setting range	0.05 In to 0.8 In for In ⩾ 20 A 0.1 In to 0.8 In for In < 20 A		
Accuracy (1)	5 %		
Resolution	1 A or 1 digit		
Drop out/pick up ratio	93 % ±2 %		
Characteristic times			
Operation time	< 55 ms at Id0 = 2.4 Istab		
Overshoot time	< 35 ms at Id0 = 2.4 Istab		
Reset time	< 45 ms at Id0 = 2.4 Istab		
Inputs			
Designation	**Syntax**	**Equations**	
Protection reset	P64REF_x_101	■	
Protection inhibition	P64REF_x_113	■	
Outputs			
Designation	**Syntax**	**Equations**	**Matrix**
Protection output	P64REF_x_3	■	■
Protection inhibited	P64REF_x_16	■	

x: unit number.
***(1)** Under reference conditions (IEC 60255-6).*

Starts per hour
ANSI code 66

Protection of motors against mechanical stress caused by starts that are too close together.

Operation

The number of starts is incremented if:
- The current taken exceeds 5 % of the current Ib after circuit breaker closing (and the circuit breaker position is hard-wired on inputs I101 and I102).
- The current taken exceeds 5 % of the current Ib after re-acceleration.

The number of starts over the period Tcons is limited by:
- the permitted number of consecutive cold starts (Nc)
- the permitted number of successive hot starts (Nh).

The "stop/start" time delay is used to impose a minimum stopping time between each start.

The motor "hot state" data item is determined by the 49RMS motor thermal overload protection. A "hot state" set point can also be configured using this protection function (see page 122).

Note: *When the 49RMS generic thermal overload protection is used, if ES0 is different from 0%, the ANSI 66 protection function may not work properly.*
As the "hot state" set point is fixed at 50% in the ANSI 66 protection function, according to ES0 setting value, the cold state for the 66 protection function may be reduced or not exist. So the number of starts will be limited by the number of consecutive hot starts, with no impact of number of consecutive cold starts setting.
When the motor curves imply to use ES0 setting to move the "cold curve", it is highly adviced to use the thermal model based on two time constants, that avoid this setting difficulty.

Block diagram

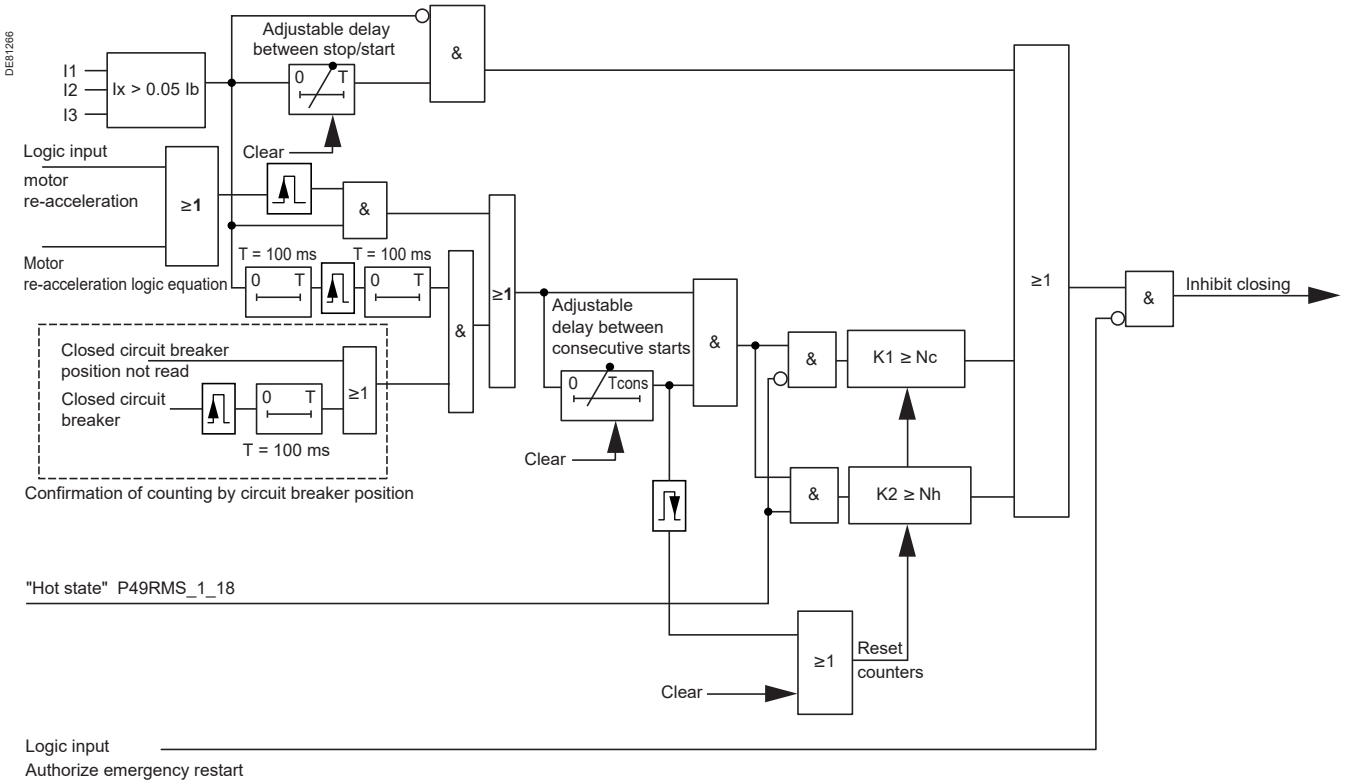

Operating information

The following information is available to the operator:
- the number of starts before inhibition
- start inhibit time

(See machine operation help functions on page 51).

Starts per hour
ANSI code 66

Characteristics

Settings				
Delay between consecutive starts (Tcons)				
Setting range	1 mn to 90 mn			
Resolution	1 mn			
Permitted number of consecutive cold starts (Nc)				
Setting range	1 to 5			
Resolution	1			
Permitted number of consecutive hot starts (Nh)				
Setting range	1 to (Nc -1)			
Resolution	1			
Delay between stop/start				
Setting range	0 to 90 mn (0 no time delay)			
Resolution	1 mn			

Inputs			
Designation	**Syntax**	**Equations**	**Logipam**
Reset protection	P66_1_101	■	■
Motor re-acceleration	P66_1_102	■	■
Inhibit protection	P66_1_113	■	■

Outputs				
Designation	**Syntax**	**Equations**	**Logipam**	**Matrix**
Protection output	P66_1_3	■	■	■
Protection inhibited	P66_1_16	■	■	
Stop/start inhibit	P66_1_29	■	■	
Startup total reached	P66_1_30	■	■	
Consecutive startups reached	P66_1_31	■	■	

Help with parameter setting

Number of consecutive starts

Motor manufacturers state the permitted number of consecutive cold (Nc) and hot (Nh) starts in the technical data.

Delay between consecutive starts

Consecutive starts are starts that are sufficiently close in relation to the rotor cooling time constant.
The delay between consecutive starts (Tcons) must be set to the value of the rotor cooling time constant:
τ **= (Tc - Th) . LRT / gn**
Where:
Tc: locked cold rotor limit time in seconds
Th: locked hot rotor limit time in seconds
LRT: locked rotor torque in pu
gn: rated slip in pu

Motor hot state set point

The motor thermal capacity used varies from 0 to $Itrip^2$ (Itrip being the motor thermal overload protection tripping current).
In order to be able to perform a hot start without tripping the thermal overload protection, the motor hot state set point must be configured.

There are 2 different scenarios:
■ The motor starting time (tstg) is close to the locked hot rotor limit time (Th).
This scenario corresponds to a motor on which the load's moment of inertia is high, such as a fan. The hot state set point is configured as follows:

$$Shot^2 < Itrip^2 - \frac{tstg}{Th}$$

■ The motor starting time (tstg) is short compared to the locked hot rotor limit time (Th).
The hot state set point is configured as follows:

$$Nc \cdot \left(\frac{tstg}{Tc}\right) < Shot^2 < Itrip^2 - \left(Nh \cdot \frac{tstg}{Th}\right)$$

In this scenario, the ANSI 66 protection function is fully involved in limiting the number of starts, because the thermal protection is well below its tripping current set point (Itrip).

Starts per hour
ANSI code 66

Example 1: 2350 kW / 6 kV motor

Manufacturer data:		
Locked cold rotor limit time	Tc	13 s
Locked hot rotor limit time	Th	9 s
Number of consecutive cold starts	Nc	3
Number of consecutive hot starts	Nh	2
Starting time	tstg	4 s
Rated speed	N	2980 rpm
Locked rotor torque	LRT	0.7 pu
Locked rotor current	Il	6 pu
Continuous permissible current	Itrip	1.2 pu

Calculating the rotor time constant
The rated slip is given by:

$$g_n = 1 - \frac{N \cdot np}{60 \cdot fn}$$

Where:
np: number of poles
fn: network frequency

The number of poles is given by:

$$np = int\left(\frac{60 \cdot fn}{N}\right)$$

hence np = int (60. 50 / 2980) = 1

Therefore:

$$g_n = 1 - \frac{2980}{60 \cdot 50} = 0{,}0067$$

The rotor constant is given by:
τ **= (Tc - Th) . LRT / gn**
Hence:
τ **= (13 - 9) . 0.7 / 0.0067 = 420 s,** or **7 mn**

Calculating the hot state set point
The hot state set point is given by:

$$Nc \cdot \left(\frac{tdem}{Tc}\right) < Shot^2 < Itrip^2 - \left(Nh \cdot \frac{tdem}{Th}\right)$$

Hence:

$$3 \cdot \left(\frac{4}{13}\right) < Shot^2 < 1,2^2 - \left(2 \cdot \frac{4}{9}\right)$$

Or 0.92 Ib < Shot ^{2} < 0.56 Ib which is impossible.
Therefore a more restrictive hot state set point is selected, allowing 1 hot start and 3 cold starts.
Hence:

$$3 \cdot \left(\frac{4}{13}\right) < Shot^2 < 1,2^2 - \left(1 \cdot \frac{4}{9}\right)$$

Or 92.30% < Shot² < 99.55 %
Or for the "hot state" set point: 0.96 Ib < Shot < 0.99 Ib

Example 2: 506 kW / 10 kV motor

Manufacturer data:		
Locked cold rotor limit time	Tc	60 s
Locked hot rotor limit time	Th	29 s
Number of consecutive cold starts	Nc	2
Number of consecutive hot starts	Nh	1
Starting time	tstg	21 s
Rated speed	N	993 rpm
Locked rotor torque	LRT	0.6 pu
Locked rotor current	Il	5.3 pu
Continuous permissible current	Itrip	1.25 pu

Calculating the rotor time constant
The number of poles equals:
np = int (60. 50 / 993) = 3

We can therefore deduce the rated slip:

$$g_n = 1 - \frac{993 \cdot 3}{60 \cdot 50} = 0{,}007$$

and the rotor cooling constant:
τ **= (60 - 29) . 0.6 / 0.007 = 2657 s,** or **44 mn**

Calculating the hot state set point
The hot state set point is given by:

$$2 \cdot \left(\frac{21}{60}\right) < \quad \text{Shot}^{2} < 1{,}25^{2} - \left(1 \cdot \frac{21}{29}\right)$$

Or 70 % < Shot² < 83.83 %
Or for the "hot state" set point: 0.83 Ib < Shot < 0.91 Ib

This setting allows 1 hot start and 3 cold starts.

Directional phase overcurrent
ANSI code 67

Phase-to-phase short-circuit protection, with selective tripping according to fault current direction.

Description

This function comprises a phase overcurrent function associated with direction detection and picks up if the phase overcurrent function in the chosen direction (line or busbar) is activated for at least one of the 3 phases (or two of the three phases, depending on the settings).

- the protection function is three-phase and has a definite or IDMT time delay.
- each of the two units has two groups of settings. Switching to setting group A or B can be carried out by a logic input or a remote control order, depending on the settings.
- the customized curve, defined point by point, may be used with this protection function.
- an adjustable timer hold, definite time or IDMT, can be used for coordination with electromagnetic relays and to detect restriking faults.
- the alarm linked to the protection function indicates the faulty phase or phases.

Tripping direction

The direction of the current is determined according to the measurement of the phase in relation to a polarization value. It is qualified as busbar direction or line direction according to the following convention:

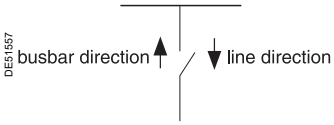

The tripping zone is set for tripping in busbar zone or tripping in line zone.

The reverse zone is the zone for which the protection function does not trip. The detection of current in the reverse zone is used for indication.

Polarization value

The polarization value is the phase-to-phase value in quadrature with the current for cosθ = 1 (90° connection angle). A phase current vector plane is divided into two half-planes that correspond to the line zone and busbar zone. The characteristic angle θ is the angle of the perpendicular to the boundary line between the 2 zones and the polarization value.

Voltage memory

Should all the voltages disappear during a 3-phase fault near the busbars, the voltage level may be insufficient for the fault direction to be detected (< 1.5 % Unp). The protection function therefore uses a voltage memory to reliably determine the direction. The fault direction is saved as long as the voltage level is too low and the current is above the Is set point.

Closing on a pre-existing fault

If the circuit breaker is closed when there is a pre-existing 3-phase fault on the busbars, the voltage memory is blank. As a result, the direction cannot be determined and the protection does not trip.

In such cases, a backup 50/51 protection function should be used.

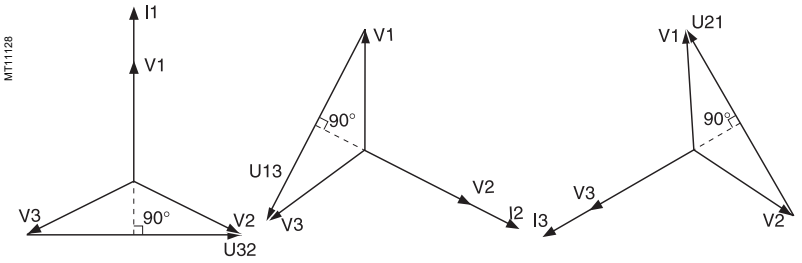

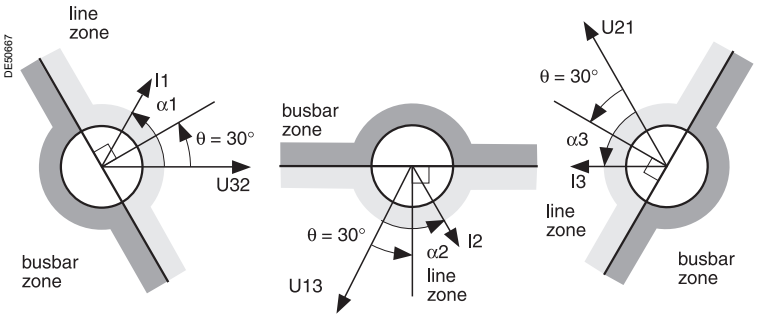

Fault tripping in line zone with θ = 30°.

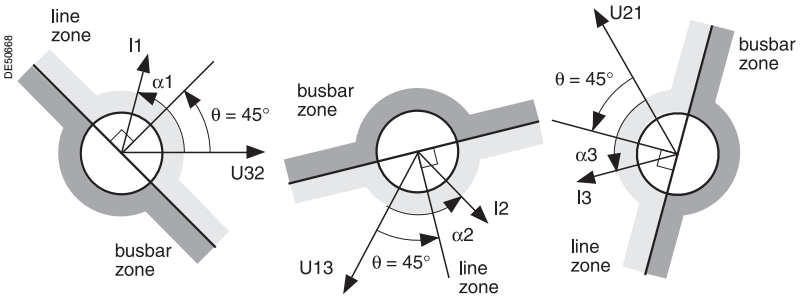

Fault tripping in line zone with θ = 45°.

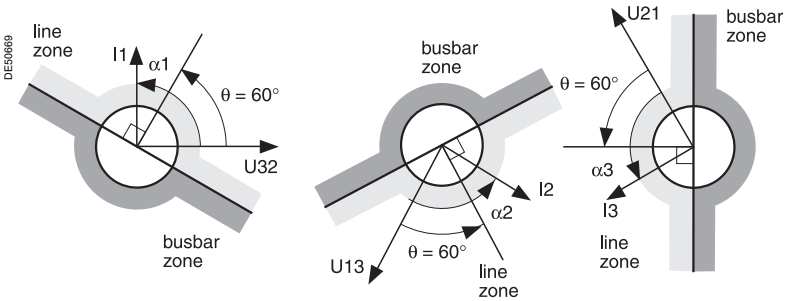

Fault tripping in line zone with θ = 60°.

Tripping logic

In certain cases, it is wise to select the "two out of three phases" tripping logic. Such cases may occur when two parallel transformers (Dy) must be protected. For a 2-phase fault on a transformer primary winding, there is a 2-1-1 current distribution at the secondary end. The highest current is in the expected zone (operation zone for the faulty incomer, no operation zone for the fault-free incomer).

One of the lowest currents is at the edge of the zone. According to the line parameters, it may even be in the wrong zone.

There is therefore a risk of tripping both incomers.

Directional phase overcurrent
ANSI code 67

Block diagram

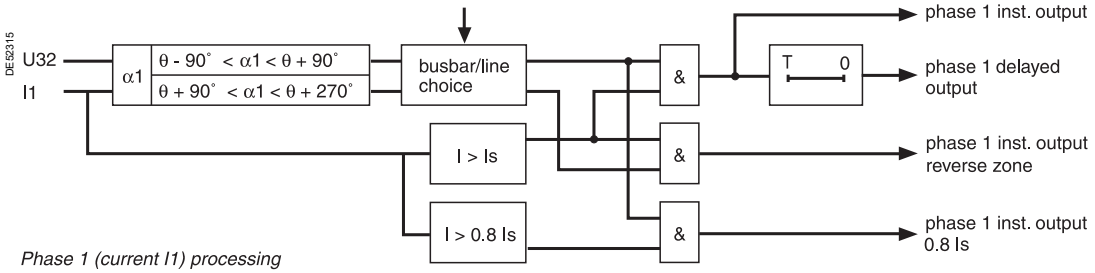

Phase 1 (current I1) processing

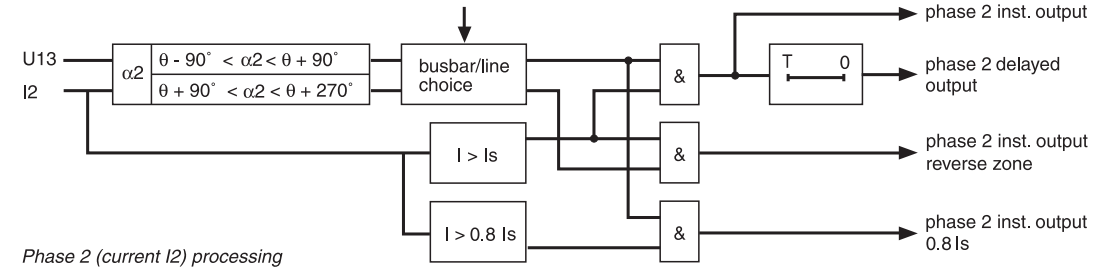

Phase 2 (current I2) processing

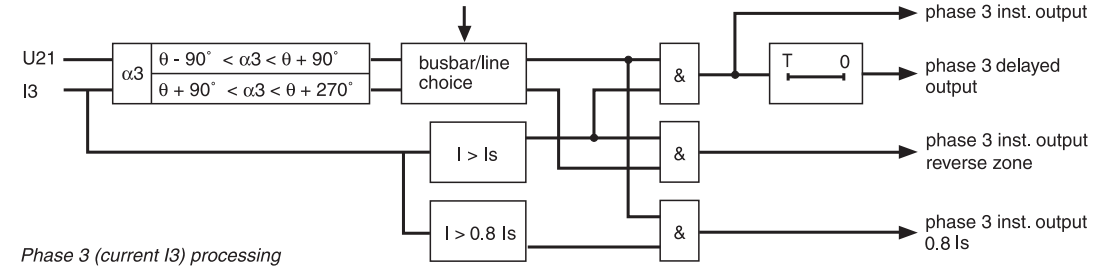

Phase 3 (current I3) processing

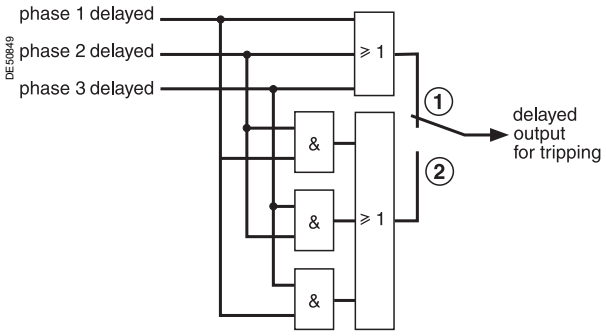

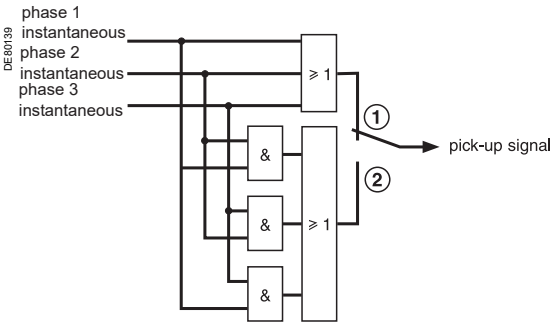

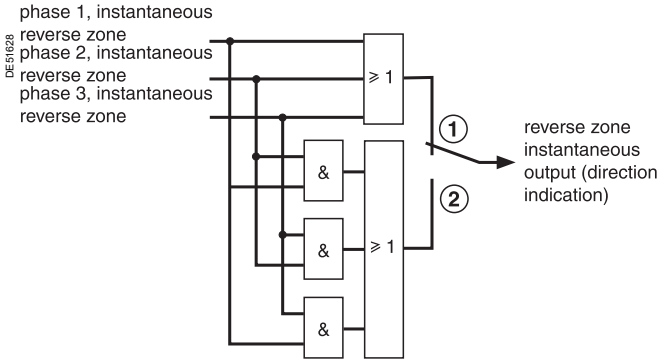

Grouping of output data.

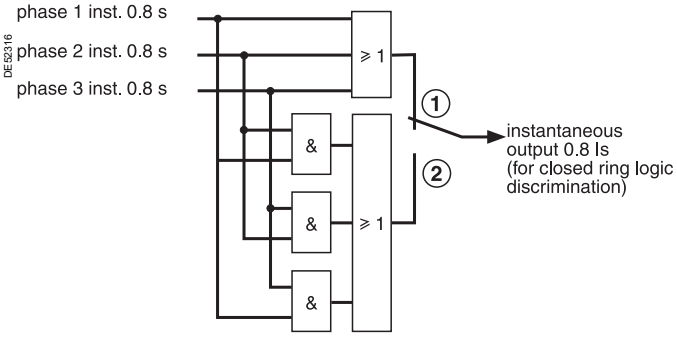

Tripping logic parameter setting:

(1) *one out of three*

(2) *two out of three*

Directional phase overcurrent
ANSI code 67

Tripping curve	Timer hold
Definite time (DT)	Definite time
Standard inverse time (SIT)	Definite time
Very inverse time (VIT or LTI)	Definite time
Extremely inverse time (EIT)	Definite time
Ultra inverse time (UIT)	Definite time
RI curve	Definite time
IEC inverse time SIT / A	Definite time or IDMT
IEC very inverse time VIT or LTI / B	Definite time or IDMT
IEC extremely inverse time EIT / C	Definite time or IDMT
IEEE moderately inverse (IEC / D)	Definite time or IDMT
IEEE very inverse (IEC / E)	Definite time or IDMT
IEEE extremely inverse (IEC / F)	Definite time or IDMT
IAC inverse	Definite time or IDMT
IAC very inverse	Definite time or IDMT
IAC extremely inverse	Definite time or IDMT
Customized	Definite time

Characteristics

Settings		
Characteristic angle θ		
Setting range		30°, 45°, 60°
Accuracy (1)		±2 %
Tripping curve		
Setting range		See list above
Is set point		
Setting range	definite time	0.1 In ⩽ Is ⩽ 24 In in amperes
	IDMT	0.1 In ⩽ Is ⩽ 2.4 In in amperes
Accuracy (1)		±5 % or ±0.01 In
Resolution		1 A or 1 digit
Drop out/pick up ratio		93.5 % ±5 % or > (1 - 0.015 In/Is) x 100 %
Time delay T (operation time at 10 Is)		
Setting range	definite time	Inst, 50 ms ⩽ T ⩽ 300 s
	IDMT	100 ms ⩽ T ⩽ 12.5 s or TMS (2)
Accuracy (1) For T ⩾ 100 ms	definite time	±2 % or from -10 ms to +25 ms
	IDMT	Class 5 or from -10 ms to +25 ms
Resolution		10 ms or 1 digit
Advanced settings		
Tripping direction		
Setting range		Busbar / line
Tripping logic		
Setting range		One out of three / two out of three
Timer hold T1		
Setting range	definite time	0; 0.05 to 300 s
	IDMT (3)	0.5 to 20 s
Resolution		10 ms or 1 digit
Characteristic times		
Operation time		pick-up < 75 ms at 2 Is (typically 65 ms) Inst. < 90 ms at 2 Is (confirmed instantaneous) (typically 75 ms)
Overshoot time		< 45 ms at 2 Is
Reset time		< 55 ms at 2 Is (for T1 = 0)

Inputs

Designation	Syntax	Equations
Protection reset	P67_x_101	■
Protection inhibition	P67_x_113	■

Outputs

Designation	Syntax	Equations	Matrix
Instantaneous output (pick-up)	P67_x_1	■	
Delayed output	P67_x_3	■	■
Drop out	P67_x_4	■	
Instantaneous output (reverse zone)	P67_x_6	■	
Phase 1 fault	P67_x_7	■	
Phase 2 fault	P67_x_8	■	
Phase 3 fault	P67_x_9	■	
Protection inhibited	P67_x_16	■	
Instantaneous output at 0.8 Is	P67_x_21	■	
1 out of 3 delayed output	P67_x_36	■	
2 out of 3 delayed output	P67_x_37	■	

x: unit number.

(1) *Under reference conditions (IEC 60255-6).*

(2) *Setting ranges in TMS (Time Multiplier Setting) mode*
Inverse (SIT) and IEC SIT/A: 0.04 to 4.20
Very inverse (VIT) and IEC VIT/B: 0.07 to 8.33
Very inverse (LTI) and IEC LTI/B: 0.01 to 0.93
Ext. inverse (EIT) and IEC EIT/C: 0.13 to 15.47
IEEE moderately inverse: 0.42 to 51.86
IEEE very inverse: 0.73 to 90.57
IEEE extremely inverse: 1.24 to 154.32
IAC inverse: 0.34 to 42.08
IAC very inverse: 0.61 to 75.75
IAC extremely inverse: 1.08 to 134.4.

(3) *Only for standardized tripping curves of the IEC, IEEE and IAC types.*

Directional earth fault
ANSI code 67N/67NC

Earth fault protection, with selective tripping according to fault current direction.

Description

To adapt to all types of applications and all earthing systems, the protection function operates according to two different types of characteristics, i.e. a choice of:

■ type 1: the protection function uses I0 vector projection.
This projection method is suitable for radial feeders in resistive, isolated or compensated neutral systems.

■ type 2: the protection function uses the I0 vector magnitude and operates like an earth fault protection function with an added direction criterion.
This projection method is suitable for closed ring distribution networks with directly earthed neutral.

■ type 3: the protection function uses the I0 vector magnitude and complies with Italian specification ENEL DK5600. It operates like an earth fault protection function with an added angular direction criterion {*Lim.1*, *Lim.2*}.
This protection method is suitable for distribution networks in which the neutral earthing system varies according to the operational mode.

Tripping direction

The direction of the residual current is qualified as busbar direction or line direction according to the following convention:

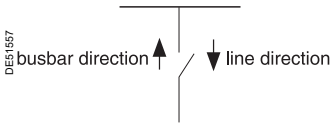

The tripping zone is set for tripping in busbar zone or tripping in line zone.
The reverse zone is the zone for which the protection function does not trip.
The detection of current in the reverse zone is used for indication.

Directional earth fault - Type 1
ANSI code 67N/67NC

Earth fault protection for impedant or compensated neutral systems.

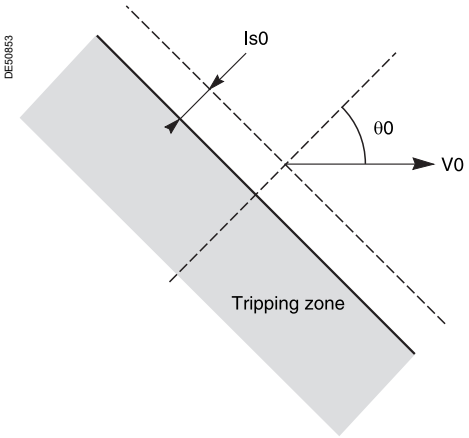

Tripping characteristic of ANSI 67N/67NC type 1 protection (characteristic angle θ0 ≠ 0°).

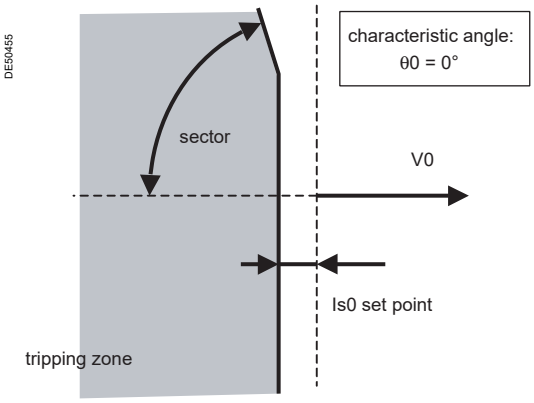

Tripping characteristic of ANSI 67N/67NC type 1 protection (characteristic angle θ0 = 0°).

Description

The function determines the projection of the residual current I0 on the characteristic line, the position of which is determined by the setting of characteristic angle θ0 in relation to the residual voltage. The projection value is compared to the Is0 set point. This protection function is suitable for radial feeders in resistive, isolated or compensated neutral systems.

With compensated neutral systems, it is characterized by its capacity to detect very brief, repetitive faults (recurrent faults). In the case of Petersen coils with no additional resistance, fault detection under steady state conditions is not possible due to the absence of active zero sequence current. The protection function uses the transient current at the beginning of the fault to ensure tripping.

The θ0 = 0° setting is suitable for compensated or impedant neutral systems. When this setting is selected, the parameter setting of the sector is used to reduce the protection tripping zone to ensure its stability on fault-free feeders.

The protection function operates with the residual current measured at one of the relay I0 inputs (operation with sum of three currents impossible). The protection function is inhibited for residual voltages below the Vs0 set point.

It implements a definite time (DT) delay.

The tripping direction may be set at the busbar end or line end.

Each of the two units has two groups of settings. Switching to setting group A or B can be carried out by a logic input or a remote control order, depending on the settings.

Memory

The detection of recurrent faults is controlled by the time delay T0mem which extends the transient pick-up information, thereby enabling the operation of the definite time delay even with faults that are rapidly extinguished (≈ 2 ms) and restrike periodically. Even when a Petersen coil with no additional resistance is used, tripping is ensured due to fault detection during the transient fault appearance. Detection is extended throughout the duration of the fault based on the criterion V0 ⩾ V0mem, within the limit of T0mem. With this type of application, T0mem must be greater than T (definite time delay).

Block diagram

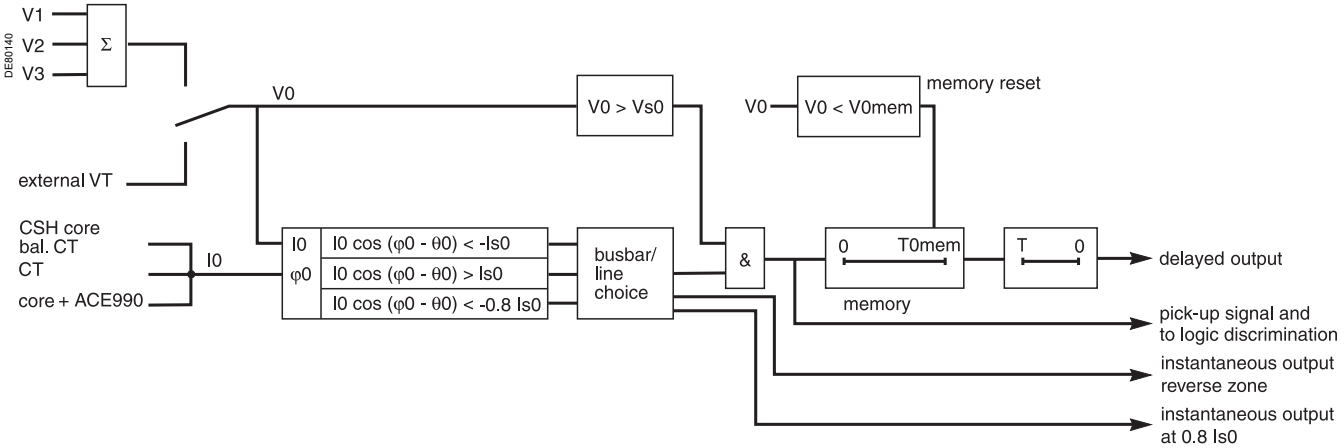

Directional earth fault - Type 1
ANSI code 67N/67NC

Characteristics

Settings			
Characteristic angle θ			
Setting range			-45°, 0°, 15°, 30°, 45°, 60°, 90°
Accuracy (1)			±2°
Is0 setting			
Setting range	0.01 In0 ⩽ Is0 ⩽ 15 In0 (min. 0.1 A) in amperes		
	With CSH sensor	2 A rating	0.1 to 30 A
		20 A rating	0.2 to 300 A
	CT		0.01 In0 ⩽ Is0 ⩽ 15 In0 (min. 0.1 A)
	Core balance CT with ACE990		0.01 In0 ⩽ Is0 ⩽ 15 In0 (min. 0.1 A)
Accuracy (1)			±5 % (at φ0 = 180°)
Resolution			0.1 A or 1 digit
Drop out/pick up ratio			93.5 % ±5 %
Time delay T (definite time (DT) tripping curve)			
Setting range			Inst, 50 ms ⩽ T ⩽ 300 s
Accuracy (1)			±2 % or from -10 ms to +25 ms
Resolution			10 ms or 1 digit
Advanced settings			
Tripping direction			
Setting range			Busbar / line
Vs0 set point			
Setting range			2 % Unp to 80 % Unp
Accuracy (1)			±5 % or ±0.005 Unp
Resolution			1 %
Drop out/pick up ratio			93.5 % ±5 % or > (1 - 0.006 Unp/Vs0) x 100 %
Sector			
Setting range			86°, 83°, 76°
Accuracy	with CCA634		±2°
	with CT + CSH30		±3°
Memory time T0mem			
Setting range			0; 0.05 to 300 s
Resolution			10 ms or 1 digit
Memory voltage V0mem			
Setting range			0; 2 to 80 % of Unp
Resolution			1 %
Characteristic times			
Operation time			Pick-up < 55 ms at 2 Is0
Overshoot time			< 45 ms at 2 Is0
Reset time			< 50 ms (at T0mem = 0)

Inputs		
Designation	**Syntax**	**Equations**
Protection reset	P67N_x_101	■
Protection inhibition	P67N_x_113	■

Outputs			
Designation	**Syntax**	**Equations**	**Matrix**
Instantaneous output (pick-up)	P67N_x_1	■	
Delayed output	P67N_x_3	■	■
Drop-out	P67N_x_4	■	
Instantaneous output (reverse zone)	P67N_x_6	■	
Protection inhibited	P67N_x_16	■	
Instantaneous output at 0.8 Is0	P67N_x_21	■	

x: unit number.

***(1)** Under reference conditions (IEC 60255-6).*

Standard setting

The settings below are given for usual applications in the different earthing systems. The shaded boxes represent default settings.

	Isolated neutral	**Impedant neutral**	**Compensated neutral**
Is0 setting	Set according to discrimination study	Set according to discrimination study	Set according to discrimination study
Characteristic angle θ0	90°	0°	0°
Time delay T	Set according to discrimination study	Set according to discrimination study	Set according to discrimination study
Direction	Line	Line	Line
Vs0 set point	2 % of Uns	2 % of Uns	2 % of Uns
Sector	N/A	86°	86°
Memory time T0mem	0	0	200 ms
Memory voltage V0mem	0	0	0

Directional earth fault - Type 2
ANSI code 67N/67NC

Earth fault protection for impedant or solidly earthed systems.

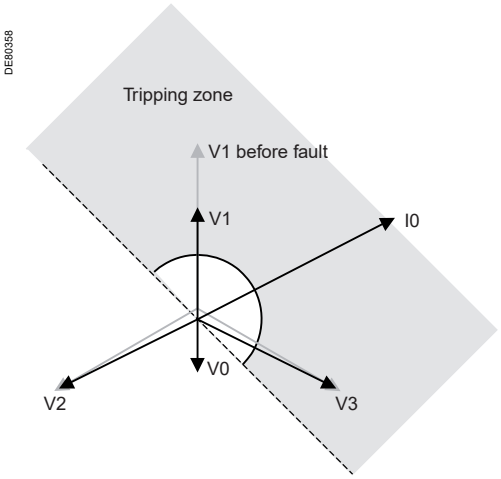

Example of phase 1 to earth fault - Measurement of the 3 phase voltages.

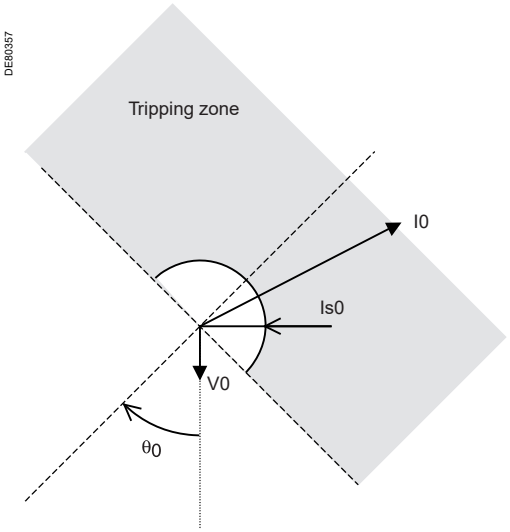

Tripping characteristic of ANSI 67N/67NC - type 2 protection function.

Description

The protection function operates like an earth fault protection function with an added direction criterion.
It is suitable for closed ring distribution networks with directly earthed neutral. It has all the characteristics of an earth fault protection function (50N/51N) and can therefore be easily coordinated with that function.
The residual current is the current measured at one of the Sepam I0 inputs or calculated using the sum of the phase currents (I), according to the parameter setting.
The tripping direction may be set at the busbar end or line end.
The protection function has a definite or IDMT time delay.
Each of the two units has two groups of settings. Switching to setting group A or B can be carried out by a logic input or a remote control order, depending on the settings.
The customized curve, defined point by point, may be used with this protection function.
An adjustable timer hold, definite time or IDMT, can be used for coordination with electromagnetic relays and to detect restriking faults.

Tripping curve	Timer hold
Definite time (DT)	Definite time
Standard inverse time (SIT)	Definite time
Very inverse time (VIT or LTI)	Definite time
Extremely inverse time (EIT)	Definite time
Ultra inverse time (UIT)	Definite time
RI curve	Definite time
IEC inverse time SIT / A	Definite time or IDMT
IEC very inverse time VIT or LTI / B	Definite time or IDMT
IEC extremely inverse time EIT / C	Definite time or IDMT
IEEE moderately inverse (IEC / D)	Definite time or IDMT
IEEE very inverse (IEC / E)	Definite time or IDMT
IEEE extremely inverse (IEC / F)	Definite time or IDMT
IAC inverse	Definite time or IDMT
IAC very inverse	Definite time or IDMT
IAC extremely inverse	Definite time or IDMT
Customized	Definite time

Block diagram

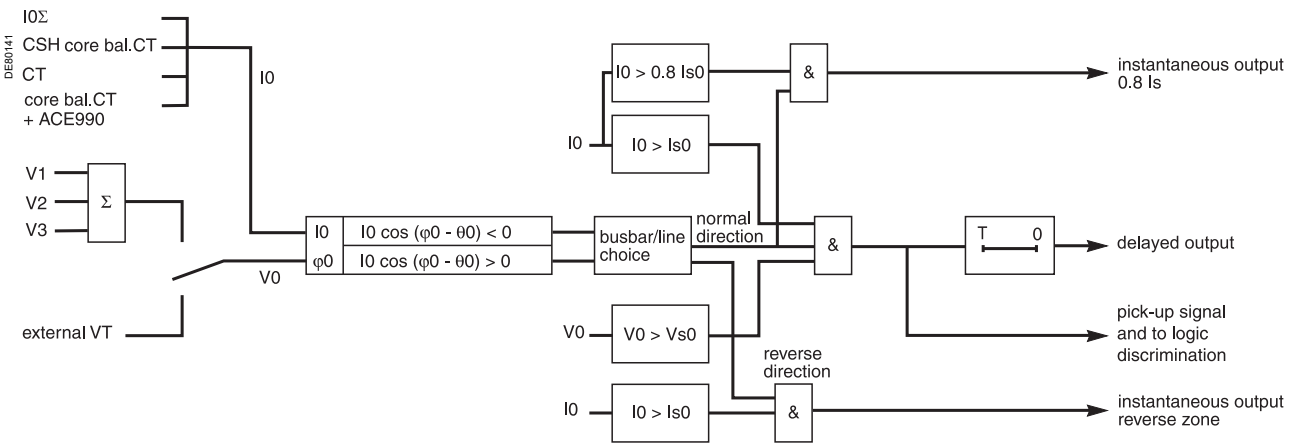

Directional earth fault - Type 2
ANSI code 67N/67NC

Characteristics

Settings			
Measurement origin			
Setting range			I0 I0Σ
Characteristic angle θ			
Setting range			-45°, 0°, 15°, 30°, 45°, 60°, 90°
Accuracy (1)			±2°
Tripping curve			
Setting range			See previous page
Is0 setting			
Definite time setting range			0.01 In0 ⩽ Is0 ⩽ 15 In0 (min. 0.1 A) in amperes
	Sum of CTs		0.01 In ⩽ Is0 ⩽ 15 In (min. 0.1 A)
	With CSH sensor	2 A rating	0.1 to 30 A
		20 A rating	0.2 to 300 A
	CT		0.01 In0 ⩽ Is0 ⩽ 15 In0 (min. 0.1 A)
	Core balance CT with ACE990		0.01 In0 ⩽ Is0 ⩽ 15 In0 (min. 0.1 A)
IDMT setting range			0.01 In0 ⩽ Is0 ⩽ In0 (mini 0.1 A) in amperes
	Sum of CTs		0.01 In ⩽ Is0 ⩽ In (min. 0.1 A)
	With CSH sensor	2 A rating	0.1 to 2 A
		20 A rating	0.2 to 20 A
	CT		0.01 In0 ⩽ Is0 ⩽ In0 (min. 0.1 A)
	Core balance CT with ACE990		0.01 In0 ⩽ Is0 ⩽ In0 (min. 0.1 A)
Accuracy (1)			±5 % or ±0.004 In0
Resolution			0.1 A or 1 digit
Drop out/pick up ratio			93.5 % ±5 % or > (1 - 0.005 In0/Is0) x 100 %
Time delay T (operation time at 10 Is0)			
Setting range	definite time		Inst, 50 ms ⩽ T ⩽ 300 s
	IDMT		100 ms ⩽ T ⩽ 12.5 s or TMS (2)
Accuracy (1)	definite time		±2 % or from -10 ms to +25 ms
	IDMT		Class 5 or from -10 ms to +25 ms
Resolution			10 ms or 1 digit
Advanced settings			
Tripping direction			
Setting range			Busbar / line
Vs0 set point			
Setting range			2 % Unp to 80 % Unp
Accuracy (1)			±5 % or ±0.005 Unp
Resolution			1 %
Drop out/pick up ratio			93 % ±5 % or > (1 - 0.006 Unp/Vs0) x 100 %
Timer hold T1			
Setting range	definite time		0; 0.05 to 300 s
	IDMT (3)		0.5 to 20 s
Resolution			10 ms or 1 digit
Characteristic times			
Operation time			Pick-up < 40 ms at 2 Is0 (typically 25 ms) Inst. < 55 ms at 2 Is0 (confirmed instantaneous) (typically 35 ms)
Overshoot time			< 35 ms at 2 Is0
Reset time			< 50 ms at 2 Is0 (for T1 = 0)

Inputs

Designation	Syntax	Equations
Protection reset	P67N_x_101	■
Protection inhibition	P67N_x_113	■

Outputs

Designation	Syntax	Equations	Matrix
Instantaneous output (pick-up)	P67N_x_1	■	
Delayed output	P67N_x_3	■	■
Drop out	P67N_x_4	■	
Instantaneous output (reverse zone)	P67N_x_6	■	
Protection inhibited	P67N_x_16	■	
Instantaneous output at 0.8 Is0	P67N_x_21	■	

x: unit number.

(1) *Under reference conditions (IEC 60255-6).*

(2) *Setting ranges in TMS (Time Multiplier Setting) mode*
Inverse (SIT) and IEC SIT/A: 0.04 to 4.20
Very inverse (VIT) and IEC VIT/B: 0.07 to 8.33
Very inverse (LTI) and IEC LTI/B: 0.01 to 0.93
Ext. inverse (EIT) and IEC EIT/C: 0.13 to 15.47
IEEE moderately inverse: 0.42 to 51.86
IEEE very inverse: 0.73 to 90.57
IEEE extremely inverse: 1.24 to 154.32
IAC inverse: 0.34 to 42.08
IAC very inverse: 0.61 to 75.75
IAC extremely inverse: 1.08 to 134.4.

(3) *Only for standardized tripping curves of the IEC, IEEE and IAC types.*

Directional earth fault - Type 3
ANSI Code 67N/67NC

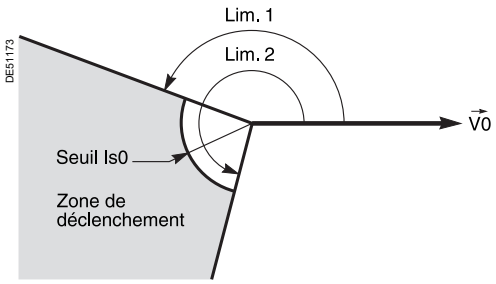

Type 3 operation

This protection operates like an earth fault protection function (ANSI 50N/51N) with an added angular direction criterion {*Lim.1*, *Lim.2*}.
It is suitable for distribution networks in which the neutral earthing system varies according to the operational mode.
The tripping direction may be set at the busbar end or line end.
The residual current is the current measured at the Sepam I0 input.
It has a definite time delay (DT constant).
By choosing an Is0 set point of 0, the protection function behaves like a neutral voltage displacement protection function (ANSI 59N).

Simplified schematic

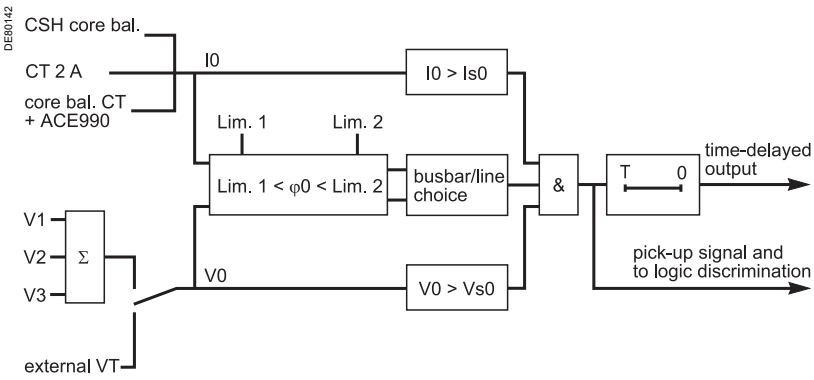

Definite time operation

Is0 corresponds to the operating set point expressed in amps, and T corresponds to the protection operating delay.

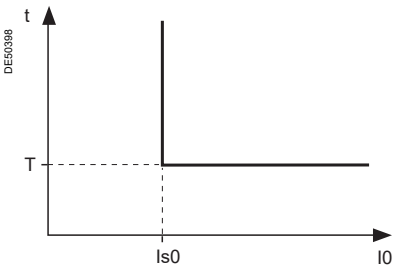

Definite time protection principle.

Directional earth fault - Type 3
ANSI Code 67N/67NC

Type 3 characteristics

Measurement origin		
Setting range		I0
		I0Σ
Tripping zone start angle *Lim.1*		
Setting		0° to 359°
Resolution		1°
Accuracy		±3°
Tripping zone end angle *Lim.2*		
Setting		0° to 359° (1)
Resolution		1°
Accuracy		±3°
Tripping direction		
Setting		Line/busbar
Is0 set point		
Setting (2)	With CSH core balance CT (2 A rating)	0.1 A to 30 A
	With 1 A CT	0.005 In0 ⩽ Is0 ⩽ 15 In0 (min. 0.1 A)
	With core balance CT + ACE990 (range 1)	0.01 In0 ⩽ Is0 ⩽ 15 In0 (min. 0.1 A) (3)
Resolution		0.1 A or 1 digit
Accuracy		±5%
Drop-out/pick-up ratio		⩾ 95%
Vs0 set point		
Setting	On sum of 3 Vs	2% Unp ⩽ Vs0 ⩽ 80% Unp
	On external VT	0.6 % Unp ⩽ Vs0 ⩽ 80% Unp
Resolution		0.1% for Vs0 < 10% 1% for Vs0 ⩾ 10%
Accuracy		±5%
Drop-out/pick-up ratio		⩾ 95%
Time delay T		
Setting		instantaneous, 50 ms ⩽ T ⩽ 300 s
Resolution		10 ms or 1 digit
Accuracy		⩽ 3% or ±20 ms at 2 Is0
Characteristic times		
Operation time		pick-up < 40 ms at 2 Is0
		instantaneous < 55 ms at 2 Is0
Overshoot time		< 40 ms
Reset time		< 50 ms

Inputs

Designation	Syntax	Equations
Reset protection	P67N_x_101	■
Inhibit protection	P67N_x_113	■

Outputs

Designation	Syntax	Equations	Matrix
Instantaneous output (pick-up)	P67N_x_1	■	
Delayed output	P67N_x_3	■	■
Drop-out	P67N_x_4	■	
Instantaneous output (reverse zone)	P67N_x_6	■	
Protection inhibited	P67N_x_16	■	
Instantaneous output at 0.8 Is0	P67N_x_21	■	

(1) *Tripping zone Lim.2-Lim.1 should be 10° or more.*
(2) *For Is0 = 0, the protection function behaves like a neutral voltage displacement protection function (59N).*
(3) *In0 = k . n where n = the core balance CT ratio and k = coefficient to be determined according to the wiring of the ACE990 (0.00578 ⩽ k ⩽ 0.04).*

Standard tripping zone setting (line end)

The settings below are given for the usual applications in different types of neutral earthing system.
The shaded boxes represent default settings.

	Isolated neutral	Impedant neutral	Directly earthed neutral
Lim.1 angle	190°	100°	100°
Lim.2 angle	350°	280°	280°

Recloser
ANSI code 79

Recloser with 1 to 4 cycles to clear transients or semi-permanent faults on overhead lines.

Definition

Reclaim time
The reclaim time is activated by a circuit breaker closing order given by the recloser.
If no faults are detected before the end of the reclaim time, the initial fault is
considered to have been cleared.
Otherwise a new reclosing cycle is initiated.
The delay must be longer than the longest reclosing cycle activation condition.

Safety time until ready
The safety time is activated by a manual circuit breaker closing order. The recloser is inhibited for the duration of the time.
If a fault occurs during this time, no reclosing cycles are initiated and the circuit breaker remains permanently open.

Dead time
Cycle n dead time is launched by
breaking device tripping order
given by the recloser during cycle n.
The breaking device remains open throughout the time.
At the end of the cycle n dead time, the n+1 cycle begins, and the recloser orders the closing of the circuit breaker.

Description

Automation device used to limit down time after tripping due to transient or semi-permanent faults on overhead lines. The recloser orders automatic reclosing of the breaking device after the time delay required to restore the insulation. Recloser operation is easy to adapt for different operating modes by parameter setting.

Initialization of the recloser
The recloser is ready to operate if all of the following conditions are met:
- "switchgear control" function activated and recloser in service (not inhibited by the recloser inhibition logic input)
- circuit breaker closed
- the safety time is not running
- none of the recloser inhibition conditions is true (e.g. trip circuit fault, control fault, SF6 pressure drop).

Recloser cycles
- case of a fault that is not cleared: following instantaneous or time-delayed tripping by the protection unit, activation of the dead time associated with the first active cycle. At the end of the dead time, a closing order is given, which activates the reclaim time. If the protection unit detects the fault before the end of the time delay, a tripping order is given and the following reclosing cycle is activated. after all the active cycles have been run, if the fault still persists, a final trip order is given, a message appears on the display.
- case of a cleared fault: Following a reclosing order, if the fault does not appear after the reclaim time has run out, the recloser reinitializes and a message appears on the display (see example 1).
- closing on a fault.

If the circuit breaker closes on a fault, or if the fault appears before the end of the safety time delay, the recloser is inhibited. A final trip message is issued.

Recloser inhibition conditions
The recloser is inhibited according to the following conditions:
- voluntary open or close order
- recloser put out of service
- receipt of a inhibition order on the logic input
- activation of the breaker failure, such as trip circuit fault, control fault, SF6 pressure drop
- opening of the circuit breaker by a protection unit that does not run reclosing cycles (e.g. frequency protection), by external tripping or by a function set up not to activate reclosing cycles.

In such cases, a final trip message appears.

Extension of the dead time
If, during a reclosing cycle, reclosing of the circuit breaker is impossible because breaker recharging is not finished (following a drop in auxiliary voltage, recharging time is longer), the dead time may be extended up to the time at which the circuit breaker is ready to carry out an "Open-Close-Open" cycle. The maximum time added to the dead time is adjustable (Twait_max). If, at the end of the maximum waiting time, the circuit breaker is still not ready, the recloser is inhibited (see example 5).

Recloser
ANSI code 79

Characteristics

Settings				
Number of cycles				
Setting range		1 to 4		
Activation of cycle 1				
Protection 50/51 units 1 to 4		inst. / delayed / no activation		
Protection 50N/51N units 1 to 4		inst. / delayed / no activation		
Protection 67 units 1 to 2		inst. / delayed / no activation		
Protection 67N/67NC units 1 to 2		inst. / delayed / no activation		
Logic equations output V_TRIPCB		active/inactive		
Activation of cycles 2, 3 and 4				
Protection 50/51 units 1 to 4		inst. / delayed / no activation		
Protection 50N/51N units 1 to 4		inst. / delayed / no activation		
Protection 67 units 1 to 2		inst. / delayed / no activation		
Protection 67N/67NC units 1 to 2		inst. / delayed / no activation		
Logic equations output V_TRIPCB		active/inactive		
Time delays				
Reclaim time		0.1 to 300 s		
Dead time	Cycle 1	0.1 to 300 s		
	Cycle 2	0.1 to 300 s		
	Cycle 3	0.1 to 300 s		
	Cycle 4	0.1 to 300 s		
Safety time until ready		0 to 60 s		
Maximum additional dead time		0.1 to 60 s		
Accuracy (1)		±2 % or ±25 ms		
Resolution		10 ms		
Inputs				
Designation		**Syntax**	**Equations**	
Protection inhibition		P79_1_113	■	
Outputs				
Designation		**Syntax**	**Equations**	**Matrix**
Recloser in service		P79 _1_201	■	■
Recloser ready		P79 _1_202	■	■
Cleared fault		P79 _1_203	■	■
Final trip		P79 _1_204	■	■
Closing by recloser		P79 _1_205	■	
Reclosing cycle 1		P79 _1_211	■	■
Reclosing cycle 2		P79 _1_212	■	■
Reclosing cycle 3		P79 _1_213	■	■
Reclosing cycle 4		P79 _1_214	■	■

(1) *Under reference conditions (IEC 60255-6).*

Example 1. Fault cleared after the second cycle

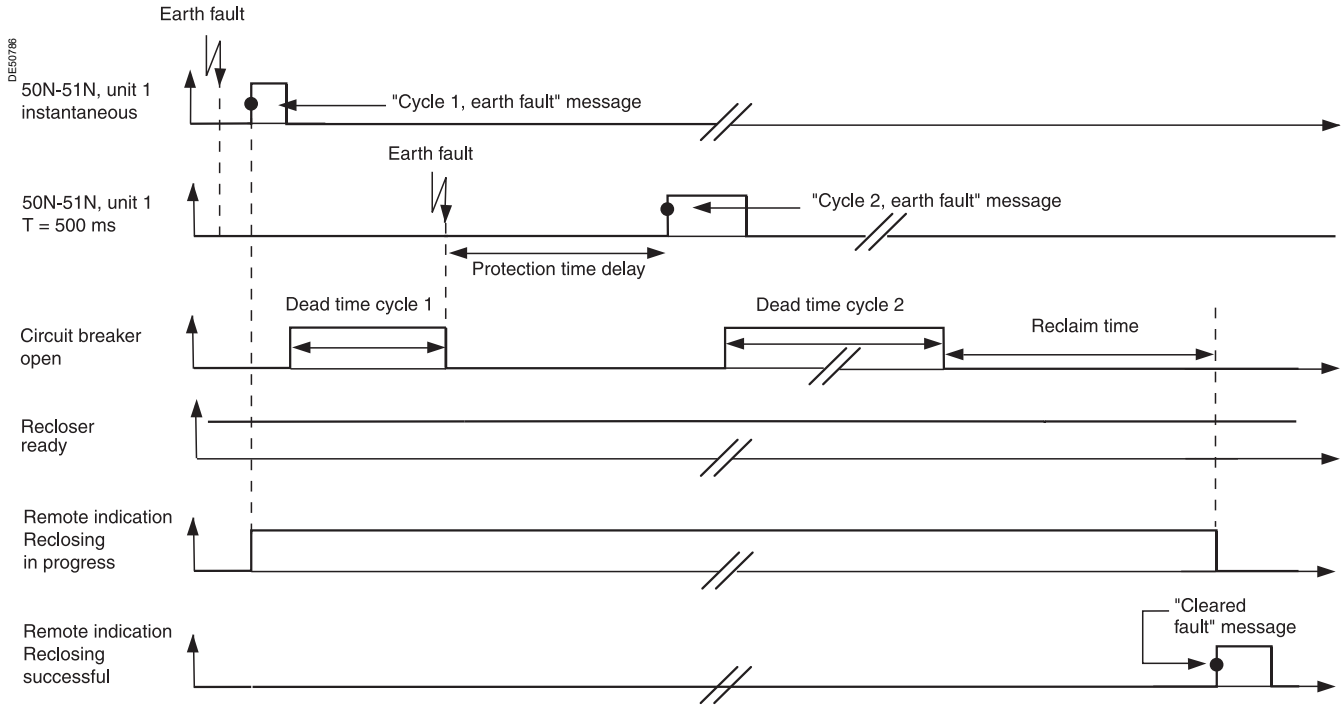

Example 2. Fault not cleared

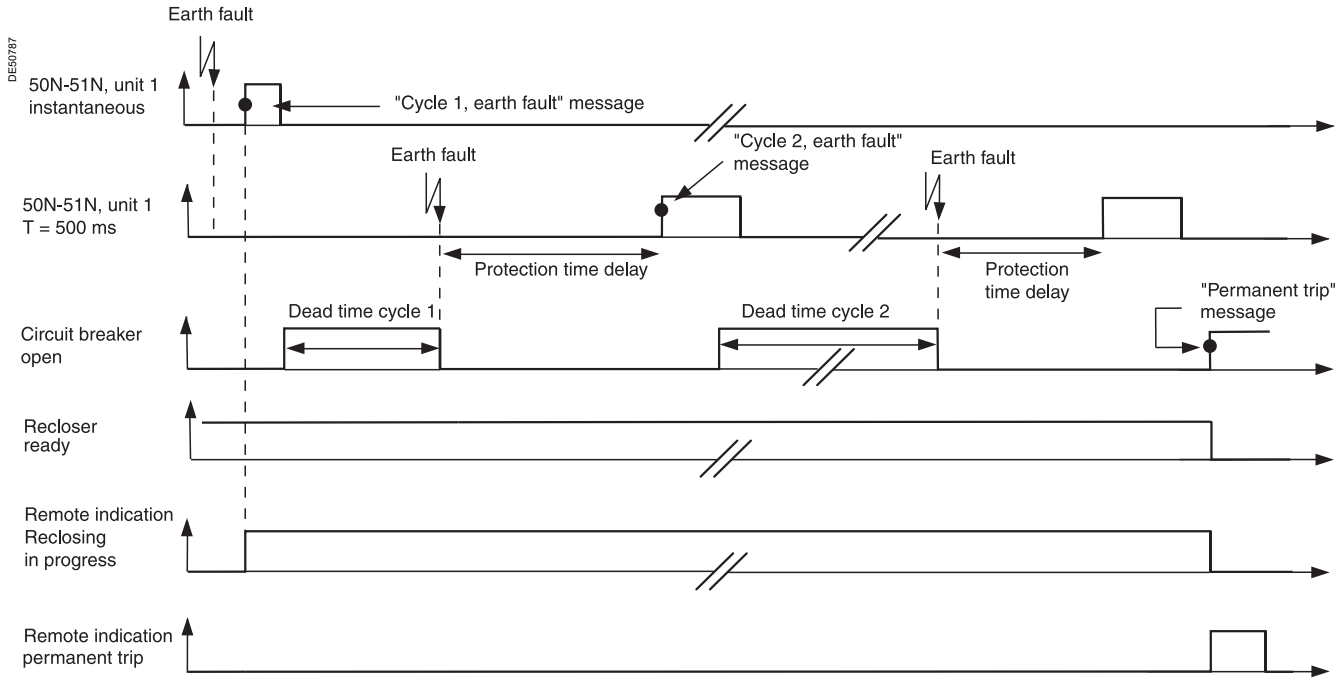

Example 3. Closing on a fault

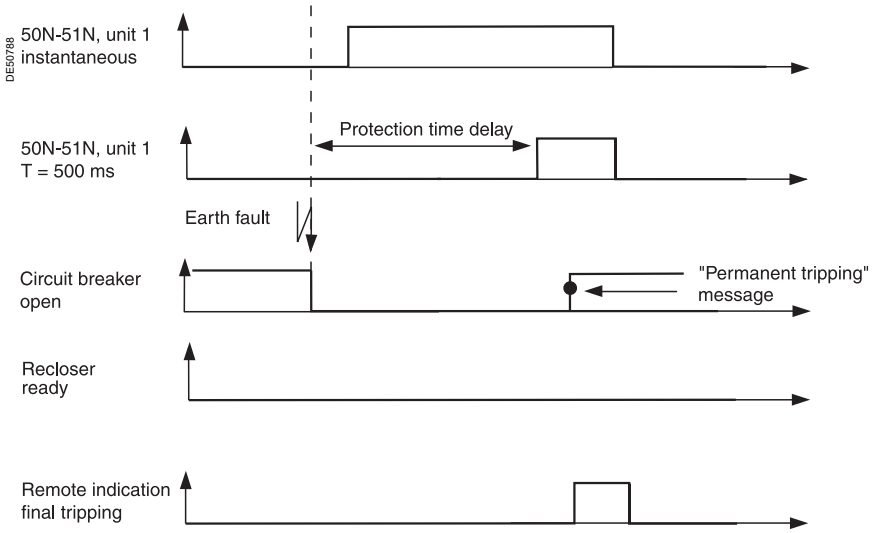

Example 4. No extension of dead time

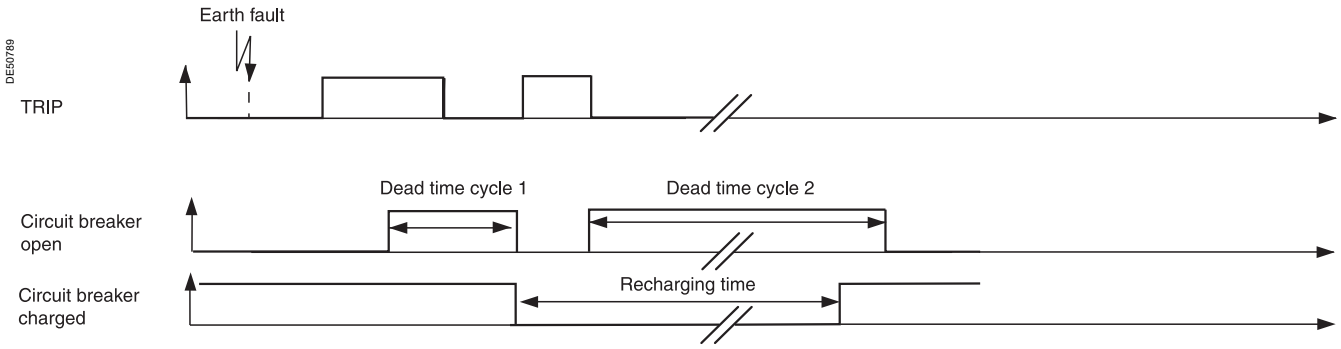

Example 5. Extension of dead time

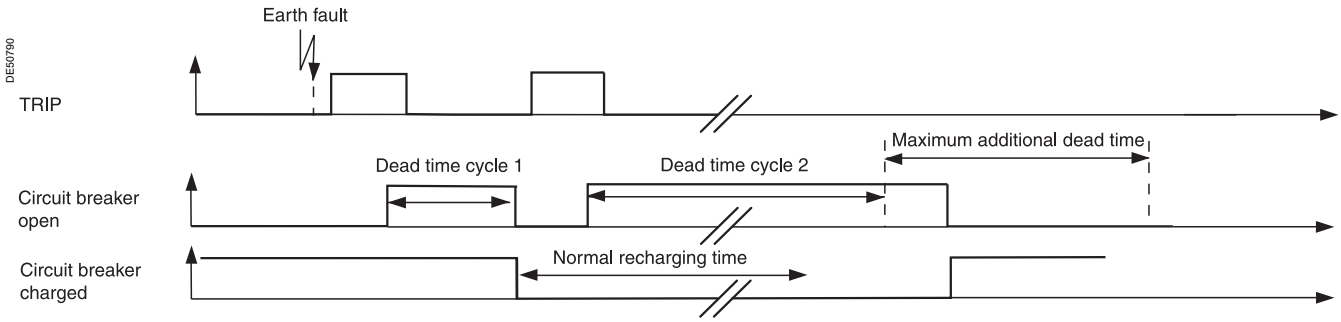

Overfrequency
ANSI code 81H

Detection of abnormally high frequencies.

Description

Detection of abnormally high frequency compared to the rated frequency, to monitor power supply quality or protect a generator against overspeeds.
The frequency is calculated using voltage V1 or U21 when only one voltage is connected, otherwise the positive sequence voltage is used to procure greater stability. It is compared to the Fs set point.
The protection function is inhibited if the voltage used for calculations is under the adjustable set point Vs.
The protection includes a definite time delay T.

Block diagram

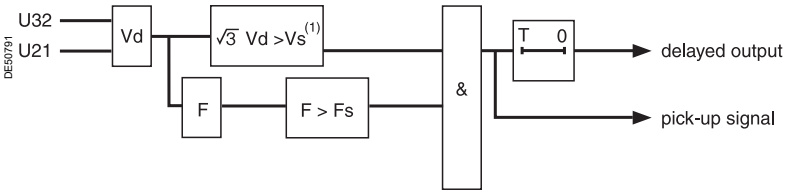

***(1)** Or U21, or 3.V1 > Vs if only one TP.*

Characteristics

Settings			
Fs set point			
Setting range	50 to 55 Hz or 60 to 65 Hz		
Accuracy (1)	±0.01 Hz		
Resolution	0.01		
Pick up / drop out difference	0.25 Hz ± 0.015 Hz		
Time delay T			
Setting range	100 ms to 300 s		
Accuracy (1)	±2 % or ±25 ms		
Resolution	10 ms or 1 digit		
Advanced settings			
Vs set point			
Setting range	20 % Un to 50 % Un		
Accuracy (1)	2 %		
Resolution	1 %		
Characteristic times			
Operation time	Pick-up < 90 ms from Fs -0.5 Hz to Fs +0.5 Hz		
Overshoot time	< 50 ms from Fs -0.5 Hz to Fs +0.5 Hz		
Reset time	< 55 ms from Fs +0.5 Hz to Fs -0.5 Hz		
Inputs			
Designation	**Syntax**	**Equations**	
Protection reset	P81H_x_101	■	
Protection inhibition	P81H_x_113	■	
Outputs			
Designation	**Syntax**	**Equations**	**Matrix**
Instantaneous output (pick-up)	P81H_x_1	■	
Delayed output	P81H_x_3	■	■
Protection inhibited	P81H_x_16	■	

x: unit number.
***(1)** Under reference conditions (IEC 60255-6) and df/dt < 3 Hz/s.*

Underfrequency
ANSI code 81L

Detection of abnormally low frequency for load shedding using a metric frequency criterion.

Description

Detection of abnormally low frequency compared to the rated frequency, to monitor power supply quality. The protection may be used for overall tripping or load shedding.
The frequency is calculated using voltage V1 or U21 when only one voltage is connected, otherwise the positive sequence voltage is used to procure greater stability. It is compared to the Fs set point.
The protection function is inhibited if the voltage used for calculations is under the adjustable set point Vs.
Protection stability is ensured in the event of the loss of the main source and presence of remanent voltage by a restraint in the event of a continuous decrease of the frequency.
The protection includes a definite (DT) time delay T.

Block diagram

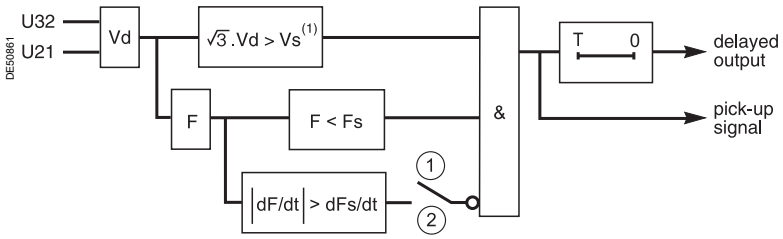

setting: (1) without restraint
(2) with restraint

***(1)** Or U21, or 3.V1 > Vs if only one TP.*

Characteristics

Settings			
Measurement origin			
Setting range	Main channels (U)		
Fs set point			
Setting range	40 to 51 Hz or 50 to 1 Hz		
Accuracy (1)	±0.01 Hz		
Resolution	0.01		
Pick up / drop out difference	0.05 Hz ± 0.015 Hz		
Time delay T			
Setting range	100 ms to 300 s		
Accuracy (1)	±2 % or ±25 ms		
Resolution	10 ms or 1 digit		
Advanced settings			
Vs set point			
Setting range	20 % Un to 90 % Un		
Accuracy (1)	2 %		
Resolution	1 %		
Restraint on frequency variation			
Setting	With / without		
dFs/dt set point	1 Hz/s to 15 Hz/s		
Accuracy (1)	±1 Hz/s		
Resolution	±1 Hz/s		
Characteristic times			
Operation time	Pick-up < 90 ms from Fs +0.5 Hz to Fs -0.5 Hz		
Overshoot time	< 50 ms from Fs +0.5 Hz to Fs -0.5 Hz		
Reset time	< 55 ms from Fs -0.5 Hz to Fs +0.5 Hz		
Inputs			
Designation	**Syntax**	**Equations**	
Protection reset	P81L_x_101	■	
Protection inhibition	P81L_x_113	■	
Outputs			
Designation	**Syntax**	**Equations**	**Matrix**
Instantaneous output (pick-up)	P81L_x_1	■	
Delayed output	P81L_x_3	■	■
Protection inhibited	P81L_x_16	■	

x: unit number.
***(1)** Under reference conditions (IEC 60255-6) and df/dt < 3 Hz/s.*

Rate of change of frequency
ANSI code 81R

Protection function based on the calculation of the frequency variation, used to rapidly disconnect a source supplying a network or to control load shedding.

Operation

The rate of change of frequency protection function is complementary to the under and overfrequency protection functions in detecting network configurations that require load shedding or disconnection.

The function is activated when the "rate of change of frequency" df/dt of the positive sequence voltage is higher than a set point. It includes a definite (DT) time delay.

The protection function operates if:
- the positive sequence voltage is greater than 50 % of the rated phase-to-neutral voltage
- the network frequency is between 42.2 Hz and 56.2 Hz for 50 Hz networks and between 51.3 Hz and 65 Hz for 60 Hz networks.

Block diagram

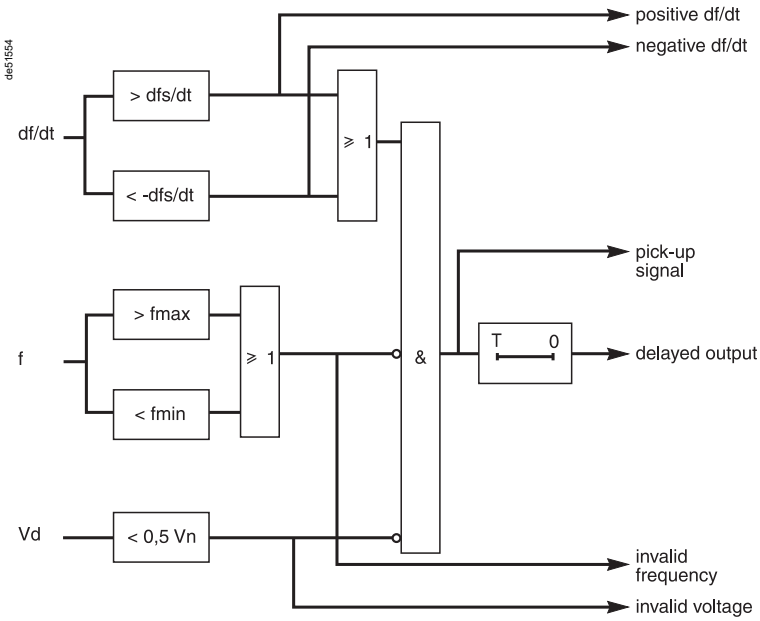

Characteristics

Settings			
dfs/dt set point			
Setting range	0.1 to 10 Hz/s		
Accuracy (1)	±5 % or ±0,1 Hz		
Resolution	0.01 Hz		
Drop out/pick up ratio	93 %		
Temporisation			
Setting range	0.15 to 300 s		
Accuracy (1)	±2 % or -10 at +25 ms		
Resolution	10 ms or 1 digit		
Characteristic times (1)			
Operation time	Pick-up < 150 ms (typically 130 ms)		
Overshoot time	< 100 ms		
Reset time	< 100 ms		
Inputs			
Designation	**Syntax**	**Equations**	
Protection reset	P81R_x_101	■	
Protection inhibition	P81R_x_113	■	
Outputs			
Designation	**Syntax**	**Equations**	**Matrix**
Instantaneous output (pick-up)	P81R_x_1	■	
Tripping output	P81R_x_3	■	■
Protection inhibited	P81R_x_16	■	
Invalid voltage	P81R_x_42	■	
Invalid frequency	P81R_x_43	■	
Positive df/dt	P81R_x_44	■	
Negative df/dt	P81R_x_45	■	

x: unit number.
***(1)** Under reference conditions (IEC 60255-6) and df/dt < 3 Hz/s.*

Rate of change of frequency
ANSI code 81R

Disconnection application

This function is used on incomers of installations that include generators that can operate in parallel with the distribution network.
The role of the function is to detect utility failures, i.e. operation of the generator as an autonomous isolated system. If the power flow from the utility prior to autonomous generator operation was not zero, the generator frequency changes.
The rate of change of frequency protection function detects autonomous generator operation more rapidly than conventional frequency protection functions.

Other disturbances such as short-circuits, load fluctuations and switching may cause changes of frequency. The low set point may be reached temporarily due to these disturbances and a time delay is necessary. In order to maintain the advantage of the speed of the rate of change of frequency protection in comparison to conventional frequency protection functions, a second, higher set point with a short time delay may be added.

The rate of change of frequency is actually not constant. Often, the rate of change of frequency is at its highest at the beginning of the disturbance after which it decreases. This extends the tripping time of frequency protection functions but does not affect the tripping time of the rate of change of frequency protection function.

Low set point

- Follow the utility's instructions, if there are any.
- If there are no utility instructions, proceed as follows:

□ if the maximum rate of change of frequency on the network under normal conditions is known, dfs/dt should be set above it.
□ if no information on the network is available, the low set point may be set according to generator data.
A good approximation of the rate of change of frequency after a utility failure resulting in a load variation ΔP is:

$$\frac{df}{dt} = \frac{\Delta P \times fn}{2 \times Sn \times H}$$

where Sn: rated power
fn: rated frequency
H: inertia constant

Typical value of the inertia constant (in MWs/MVA):
0.5 ⩽ H ⩽ 1.5 for diesel and low-power generators (⩽ 2 MVA)
2 ⩽ H ⩽ 5 for gas turbines and medium-power generators (⩽ 40 MVA)

$$H = \frac{J \times \Omega^2}{2 \times Sn}$$

where J: moment of inertia
Ω: machine speed

Examples

Rated power	2 MVA	20 MVA
Inertia constant	0.5 MWs/MVA	2 MWs/MVA
Power variation	0.1 MVA	1 MVA
df/dt	-2.5 Hz/s	-0.6 Hz/s

Low set point delay setting

For good protection stability during short-circuits or transient disturbances, the recommended time delay is 300 ms or more. If an automatic recloser is in service upstream of the installation, the detection of autonomous generator operation and the opening of the coupling circuit breaker must take place during the recloser isolation time.

High set point

The second set point may be chosen so that the rate of change of frequency tripping curve remains below the under and overfrequency protection curves.
If the frequency protection units are set to fn±0.5Hz and the low set point of the rate of change of frequency is T, the high set point may be set to 0.5/T.

High set point delay setting

No particular recommendantions.

Setting recommendations when no other information is available

Settings	Generator power	2 to 10 MVA	> 10 MVA
Low set point	dfs/dt	0.5 Hz/s	0.2 Hz/s
	T	500 ms	500 ms
High set point	dfs/dt	2.5 Hz/s	1 Hz/s
	T	150 ms	150 ms

Rate of change of frequency
ANSI code 81R

Operating precautions:
When the generator connects to the network, power oscillations may occur until the generator becomes fully synchronized. The rate of change of frequency protection function is sensitive to this phenomenon, so it is advisable to inhibit the protection unit for a few seconds after circuit breaker closing.

Load shedding application

The rate of change of frequency protection function may also be used for load shedding in combination with underfrequency protection. In such cases, it is used on the installation busbars. Only negative frequency derivatives are to be used.

Two principles are available:
- acceleration of load shedding:

The rate of change of frequency protection functions controls load shedding. It acts faster than underfrequency protection functions and the value measured (df/dt) is directly proportional to the load to be shed
- load shedding inhibition:

This principle is included in underfrequency protection functions. It consists of activating the frequency variation restraint and does not call for implementation of the rate of change of frequency protection function.

General
Tripping curves

Presentation of tripping curve operation and settings for protection functions using:
- *definite time*
- *IDMT*
- *timer hold.*

Definite time protection

The tripping time is constant. The time delay is started when the set point is overrun.

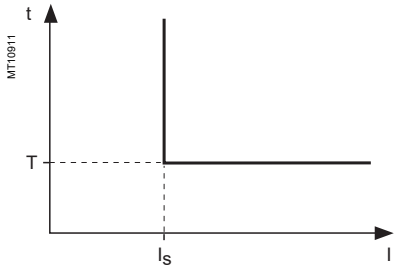

Definite time protection principle.

IDMT protection

The operation time depends on the protected value (phase current, earth fault current, etc.) in accordance with standards IEC 60255-3, BS 142 and IEEE C-37112.

Operation is represented by a characteristic curve, e.g.:
- t = f(I) curve for the **phase overcurrent** function
- t = f(I0) curve for the **earth fault** function.

The rest of the document is based on t = f(I); the reasoning may be extended to other variables I0, etc.

The curve is defined by:
- its type (standard inverse, very inverse, extremely inverse, etc.)
- current setting Is which corresponds to the vertical asymptote of the curve
- time delay T which corresponds to the operation time for I = 10 Is.

These 3 settings are made chronologically in the following order: type, Is current, time delay T.

Changing the time delay T setting by x % changes all of the operation times in the curve by x %.

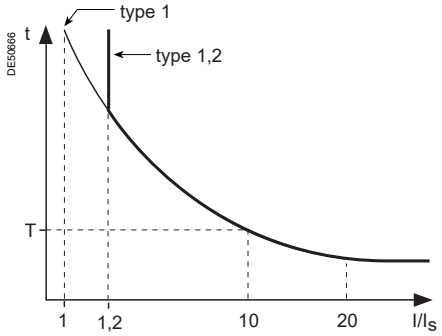

IDMT protection principle.

The tripping time for I/Is values less than 1.2 depends on the type of curve selected.

Name of curve	Type
Standard inverse time (SIT)	1, 2
Very inverse time (VIT or LTI)	1, 2
Extremely inverse time (EIT)	1, 2
Ultra inverse time (UIT)	1, 2
RI curve	1
IEC inverse time SIT / A	1
IEC very inverse time VIT or LTI / B	1
IEC extremely inverse time EIT / C	1
IEEE moderately inverse (IEC / D)	1
IEEE very inverse (IEC / E)	1
IEEE extremely inverse (IEC / F)	1
IAC inverse	1
IAC very inverse	1
IAC extremely inverse	1

- when the monitored value is more than 20 times the set point, the tripping time is limited to the value corresponding to 20 times the set point.
- if the monitored value exceeds the measurement capacity of Sepam (40 In for the phase current channels, 20 In0 for the residual current channels), the tripping time is limited to the value corresponding to the largest measurable value (40 In or 20 In0).

General
Tripping curves

Current IDMT tripping curves

Multiple IDMT tripping curves are offered, to cover most applications:
- IEC curves (SIT, VIT/LTI, EIT)
- IEEE curves (MI, VI, EI)
- commonly used curves (UIT, RI, IAC).

IEC curves

Equation

$$t_d(I) = \frac{k}{\left(\frac{I}{I_s}\right)^{\alpha} - 1} \times \frac{T}{\beta}$$

Curve type	Coefficient values		
	k	α	β
Standard inverse / A	0.14	0.02	2.97
Very inverse / B	13.5	1	1.50
Long time inverse / B	120	1	13.33
Extremely inverse / C	80	2	0.808
Ultra inverse	315.2	2.5	1

RI curve

Equation: $$t_d(I) = \frac{1}{0.339 - 0.236\left(\frac{I}{I_s}\right)^{-1}} \times \frac{T}{3.1706}$$

IEEE curves

Equation

$$t_d(I) = \left(\frac{A}{\left(\frac{I}{I_s}\right)^{p} - 1} + B\right) \times \frac{T}{\beta}$$

Curve type	Coefficient values			
	A	B	p	β
Moderately inverse	0.010	0.023	0.02	0.241
Very inverse	3.922	0.098	2	0.138
Extremely inverse	5.64	0.0243	2	0.081

IAC curves

Equation

$$t_d(I) = \left(A + \frac{B}{\left(\frac{I}{I_s} - C\right)} + \frac{D}{\left(\frac{I}{I_s} - C\right)^2} + \frac{E}{\left(\frac{I}{I_s} - C\right)^3}\right) x \frac{T}{\beta}$$

Curve type	Coefficient values					
	A	B	C	D	E	β
Inverse	0.208	0.863	0.800	-0.418	0.195	0.297
Very inverse	0.090	0.795	0.100	-1.288	7.958	0.165
Extremely inverse	0.004	0.638	0.620	1.787	0.246	0.092

Voltage IDMT tripping curves

Equation for ANSI 27 - Undervoltage

$$t_d(V) = \frac{T}{1 - \left(\frac{V}{V_s}\right)}$$

Equation for ANSI 59N - Neutral voltage displacement

$$t_d(V) = \frac{T}{\left(\frac{V}{V_s}\right) - 1}$$

General
Tripping curves

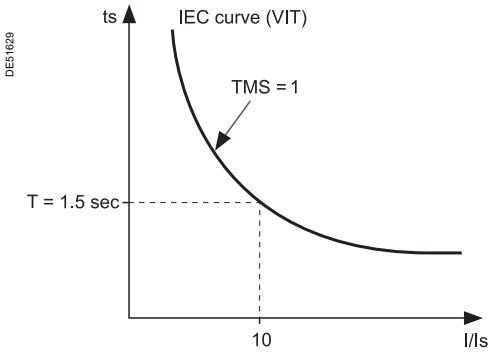

Example.

Setting of IDMT tripping curves, time delay T or TMS factor

The time delays of current IDMT tripping curves (except for customized and RI curves) may be set as follows:

- time T, operating time at 10 x Is
- TMS factor, factor shown as T/β in the equations on the left.

Example: $\mathbf{t(I) = \frac{13.5}{\frac{I}{Is} - 1} \times TMS}$ where $\mathbf{TMS = \frac{T}{1.5}}$.

The IEC curve of the VIT type is positioned so as to be the same with TMS = 1 or T = 1.5 s.

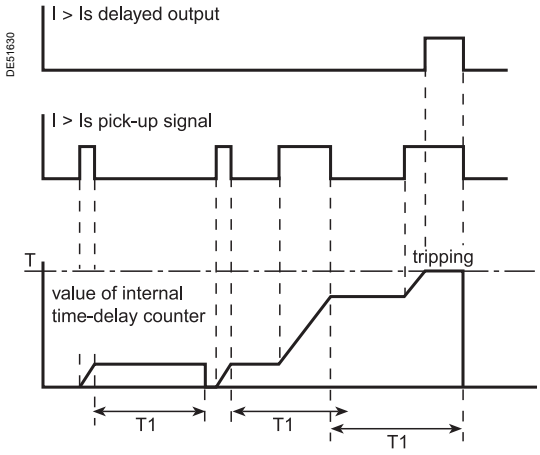

Detection of restriking faults with adjustable timer hold.

Timer hold

The adjustable timer hold T1 is used for:

- detection of restriking faults (DT curve)
- coordination with electromechanical relays (IDMT curve).
- Timer hold may be inhibited if necessary.

Equation for IDMT timer hold curve

Equation: $\mathbf{t_r(I) = \frac{T1}{1 - \left(\frac{I}{Is}\right)^2} \times \frac{T}{\beta}}$ where $\mathbf{\frac{T}{\beta} = TMS}$.

T1 = timer hold setting (timer hold for I reset = 0 and TMS = 1)
T = tripping time delay setting (at 10 Is)

β = basic tripping curve value at $\mathbf{\frac{k}{10^{\alpha} - 1}}$.

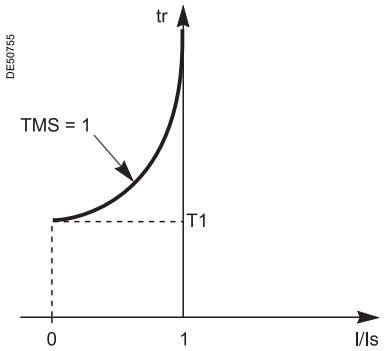

Timer hold dependent on current I.

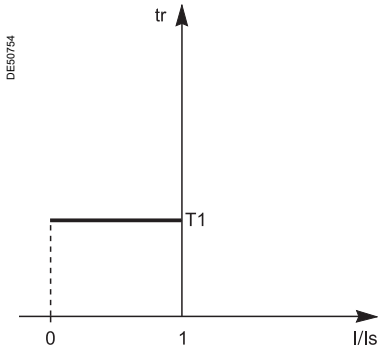

Constant timer hold.

Customized tripping curve

Defined point by point using the SFT2841 setting and operating software tool (application menu), this curve may be used to solve all special cases involving protection coordination or installation renovation.
It offers between 2 and 30 points whose coordinates must be:

- increasing on the I/Is axis
- decreasing on the t axis.

The two end points define the curve asymptotes.
There must be at least one point on the horizontal coordinate 10 I/Is. It serves as a reference point to set the function time delay by curve shifting.

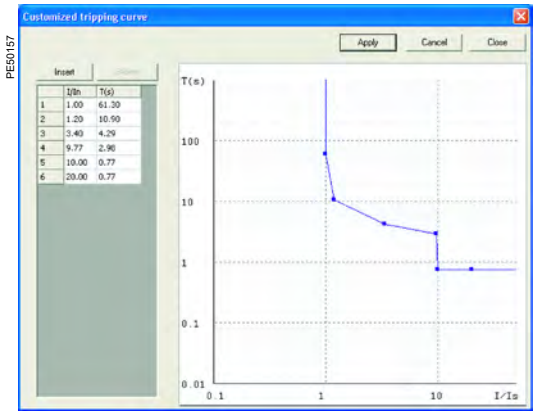

Customized tripping curve set using SFT2841 software.

Implementing IDMT curves: examples of problems to be solved.

Problem 1.
Given the type of IDMT, determine the Is current and time delay T settings.
Theoretically, the Is current setting corresponds to the maximum continuous current: it is generally the rated current of the protected equipment (cable, transformer).
The time delay T corresponds to operation at 10 Is on the curve. This setting is determined taking into account the constraints involved in discrimination with the upstream and downstream protection devices.
The discrimination constraint leads to the definition of point A on the operation curve (IA, tA), e.g. the point that corresponds to the maximum fault current for the downstream protection device.

Problem 2.
Given the type of IDMT, the Is current setting and a point k (Ik, tk) on the operation curve, determine the time delay setting T.
On the standard curve of the same type, read the operation time tsk that corresponds to the relative current **Ik/Is** and the operation time Ts10 that corresponds to the relative current **I/Is = 10.**

The time delay setting to be used so that the operation curve passes through the point k (Ik, tk) is:

$$\mathbf{T = Ts10 \times \frac{tk}{tsk}}$$

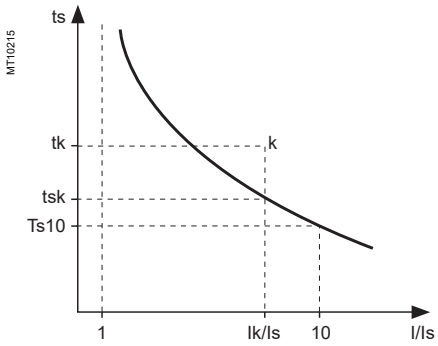

Another practical method:
the table below gives the values of **K = ts/ts10** as a function of **I/Is.**
In the column that corresponds to the type of time delay, read the value **K = tsk/Ts10** on the line for **Ik/Is.**
The time delay setting to be used so that the operation curve passes through point k (Ik, tk) is: **T = tk/k.**

Example
Data:
- type of time delay: standard inverse time (**SIT**)
- set point: Is
- a point k on the operation curve: k (3.5 Is; 4 s)

Question: What is the time delay T setting (operation time at 10 Is)?
Reading the table: **SIT** column, line **I/Is** = **3.5** therefore **K = 1.858**
Answer: The time delay setting is **T = 4/1.858 = 2.15 s**

General
Tripping curves

Problem 3.
Given the Is current and time delay T settings for a type of time delay (standard inverse, very inverse, extremely inverse), find the operation time for a current value IA.
On the standard curve of the same type, read the operation time tsA that corresponds to the relative current IA/Is and the operation time Ts10 that corresponds to the relative current **I/Is = 10.**
The operation time tA for the current IA with the Is and T settings is **tA = tsA x T/Ts10.**

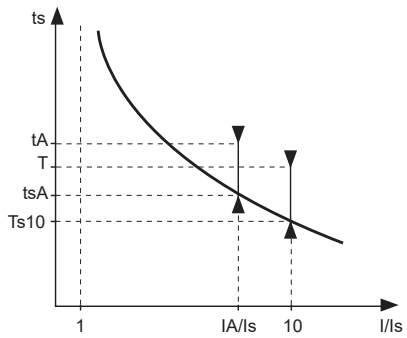

Another practical method:
the table below gives the values of **K = ts/Ts10** as a function of **I/Is.**
In the column that corresponds to the type of time delay, read the value **K = tsA/Ts10** on the line for **IA/Is,** the operation time tA for the current IA with the Is and T settings is **tA = K . T.**

Example
Data:
- type of time delay: very inverse time (**VIT**)
- set point: Is
- time delay T = 0.8 s.

Question: What is the operation time for the current IA = 6 Is?
Reading the table: **VIT** column**,** line I/Is = 6, therefore k = 1.8

Answer: The operation time for the current IA is t = 1.80 x 0.8 = 1.44 s.

Table of K values

I/Is	SIT and IEC/A	VIT, LTI and IEC/B	EIT and IEC/C	UIT	RI	IEEE MI (IEC/D)	IEEE VI (IEC/E)	IEEE EI (IEC/F)	IAC I	IAC VI	IAC EI
1.0	∞ (1)	∞ (1)	∞ (1)	—	3.062	∞	∞	∞	62.005	62.272	200.226
1.1	24.700 (1)	90.000 (1)	471.429 (1)	—	2.534	22.461	136.228	330.606	19.033	45.678	122.172
1.2	12.901	45.000	225.000	545.905	2.216	11.777	65.390	157.946	9.413	34.628	82.899
1.5	5.788	18.000	79.200	179.548	1.736	5.336	23.479	55.791	3.891	17.539	36.687
2.0	3.376	9.000	33.000	67.691	1.427	3.152	10.199	23.421	2.524	7.932	16.178
2.5	2.548	6.000	18.857	35.490	1.290	2.402	6.133	13.512	2.056	4.676	9.566
3.0	2.121	4.500	12.375	21.608	1.212	2.016	4.270	8.970	1.792	3.249	6.541
3.5	1.858	3.600	8.800	14.382	1.161	1.777	3.242	6.465	1.617	2.509	4.872
4.0	1.676	3.000	6.600	10.169	1.126	1.613	2.610	4.924	1.491	2.076	3.839
4.5	1.543	2.571	5.143	7.513	1.101	1.492	2.191	3.903	1.396	1.800	3.146
5.0	1.441	2.250	4.125	5.742	1.081	1.399	1.898	3.190	1.321	1.610	2.653
5.5	1.359	2.000	3.385	4.507	1.065	1.325	1.686	2.671	1.261	1.473	2.288
6.0	1.292	1.800	2.829	3.616	1.053	1.264	1.526	2.281	1.211	1.370	2.007
6.5	1.236	1.636	2.400	2.954	1.042	1.213	1.402	1.981	1.170	1.289	1.786
7.0	1.188	1.500	2.063	2.450	1.033	1.170	1.305	1.744	1.135	1.224	1.607
7.5	1.146	1.385	1.792	2.060	1.026	1.132	1.228	1.555	1.105	1.171	1.460
8.0	1.110	1.286	1.571	1.751	1.019	1.099	1.164	1.400	1.078	1.126	1.337
8.5	1.078	1.200	1.390	1.504	1.013	1.070	1.112	1.273	1.055	1.087	1.233
9.0	1.049	1.125	1.238	1.303	1.008	1.044	1.068	1.166	1.035	1.054	1.144
9.5	1.023	1.059	1.109	1.137	1.004	1.021	1.031	1.077	1.016	1.026	1.067
10.0	1.000	1.000	1.000	1.000	1.000	1.000	1.000	1.000	1.000	1.000	1.000
10.5	0.979	0.947	0.906	0.885	0.996	0.981	0.973	0.934	0.985	0.977	0.941
11.0	0.959	0.900	0.825	0.787	0.993	0.963	0.950	0.877	0.972	0.957	0.888
11.5	0.941	0.857	0.754	0.704	0.990	0.947	0.929	0.828	0.960	0.939	0.841
12.0	0.925	0.818	0.692	0.633	0.988	0.932	0.912	0.784	0.949	0.922	0.799
12.5	0.910	0.783	0.638	0.572	0.985	0.918	0.896	0.746	0.938	0.907	0.761
13.0	0.895	0.750	0.589	0.518	0.983	0.905	0.882	0.712	0.929	0.893	0.727
13.5	0.882	0.720	0.546	0.471	0.981	0.893	0.870	0.682	0.920	0.880	0.695
14.0	0.870	0.692	0.508	0.430	0.979	0.882	0.858	0.655	0.912	0.868	0.667
14.5	0.858	0.667	0.473	0.394	0.977	0.871	0.849	0.631	0.905	0.857	0.641
15.0	0.847	0.643	0.442	0.362	0.976	0.861	0.840	0.609	0.898	0.846	0.616
15.5	0.836	0.621	0.414	0.334	0.974	0.852	0.831	0.589	0.891	0.837	0.594
16.0	0.827	0.600	0.388	0.308	0.973	0.843	0.824	0.571	0.885	0.828	0.573
16.5	0.817	0.581	0.365	0.285	0.971	0.834	0.817	0.555	0.879	0.819	0.554
17.0	0.808	0.563	0.344	0.265	0.970	0.826	0.811	0.540	0.874	0.811	0.536
17.5	0.800	0.545	0.324	0.246	0.969	0.819	0.806	0.527	0.869	0.804	0.519
18.0	0.792	0.529	0.307	0.229	0.968	0.812	0.801	0.514	0.864	0.797	0.504
18.5	0.784	0.514	0.290	0.214	0.967	0.805	0.796	0.503	0.860	0.790	0.489
19.0	0.777	0.500	0.275	0.200	0.966	0.798	0.792	0.492	0.855	0.784	0.475
19.5	0.770	0.486	0.261	0.188	0.965	0.792	0.788	0.482	0.851	0.778	0.463
20.0	0.763	0.474	0.248	0.176	0.964	0.786	0.784	0.473	0.848	0.772	0.450

***(1)** Values suitable only for IEC A, B and C curves.*

Standard inverse time SIT curve
Very inverse time VIT or LTI curve
RI curve

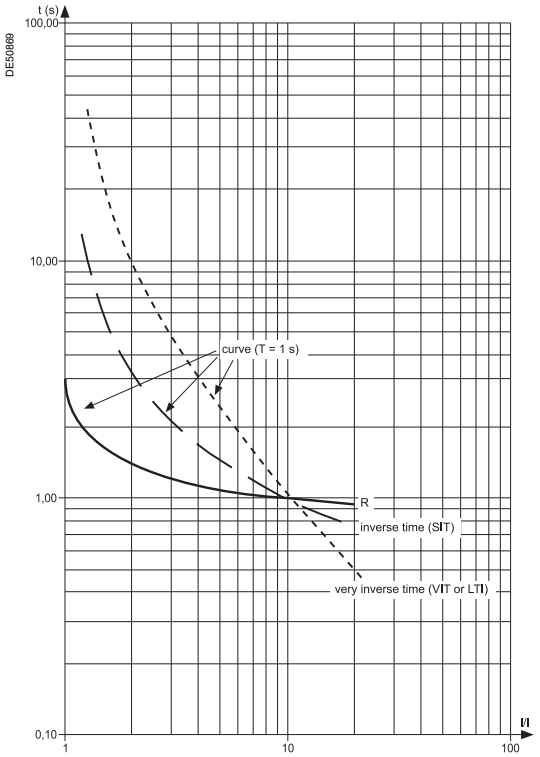

Extremely inverse time EIT curve
Ultra inverse time UIT curve

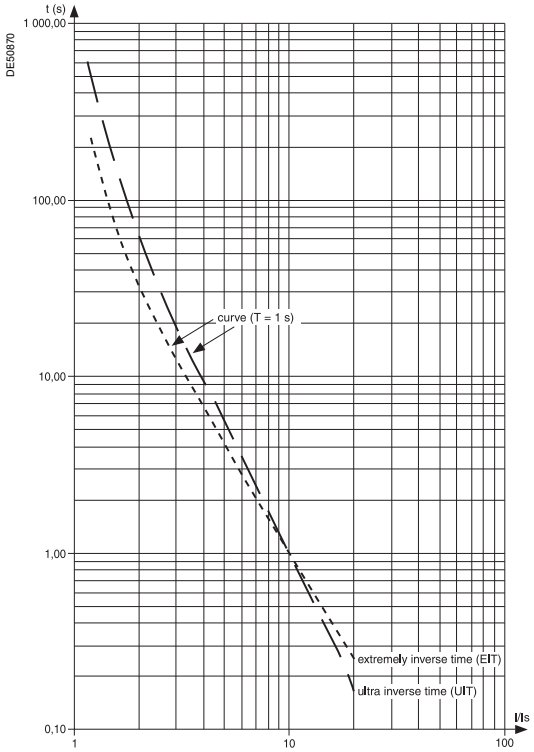

IEEE curves

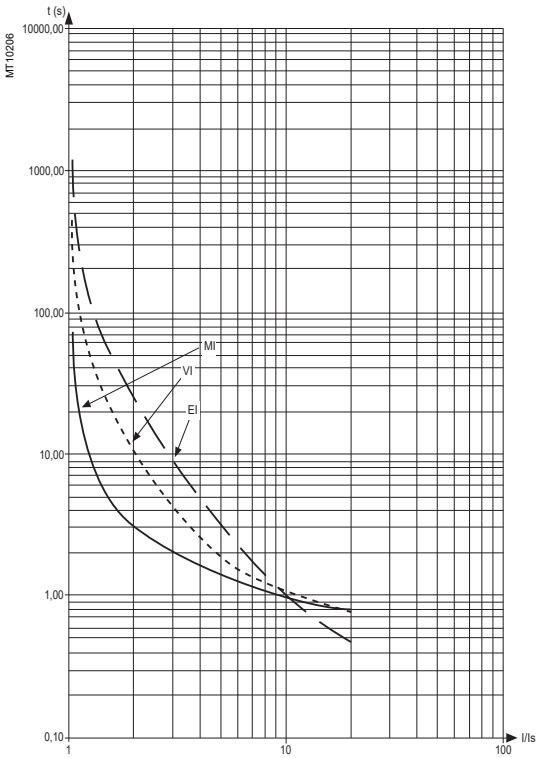

IAC curves

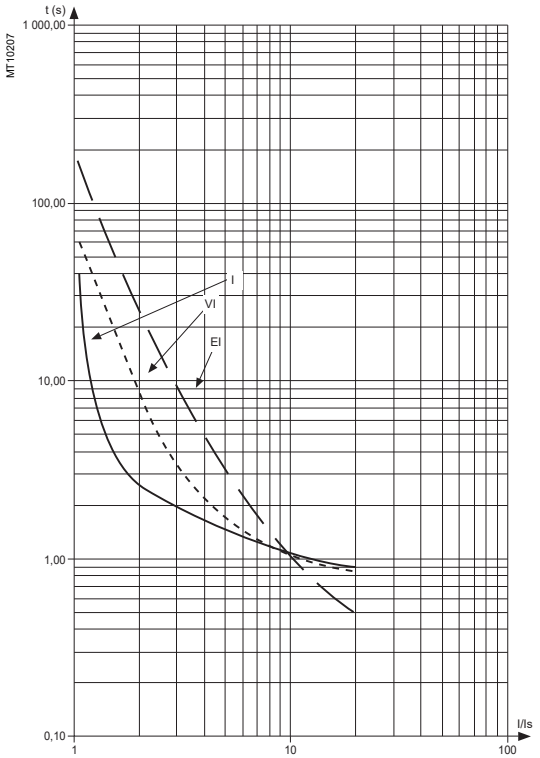

Contents

Description **192**

Definition of symbols **193**

Logic input / output assignment **194**

Switchgear control **197**
ANSI code 94/69 197

Latching / acknowledgement **203**

TC / switchgear position discrepancy Tripping **204**

Disturbance-recording trigger **205**

Switching of groups of settings **206**

Logic discrimination **207**
Principle 207
S60, T60, and G60 applications 210
M61 and C60 applications 211
S62, T62 and G62 applications 212
Example of setting: radial network 214
Example of setting: parallel incomers 216
Example of setting: closed ring network 218

Load shedding **222**

Restart **223**

Generator shutdown and tripping **225**
Genset shutdown 226
De-excitation 227
Example 228

Automatic transfer **229**

Automatic "one out of two" transfer **231**
Operation 231
Implementation 235
Characteristics 238

Automatic "two out of three" transfer **239**
Operation 239
Implementation 244
Characteristics 248

Triggering the Motor start report (MSR) **249**

Activating / Deactivating the Data log function (DLG) **250**

Change of phase rotation direction **251**

Local indication **252**
ANSI code 30 252

Local control **255**

Control matrix **258**

Logic equations **260**

Self-tests and fail-safe position **264**

Description

Sepam performs all the control and monitoring functions required for electrical network operation:
■ the main control and monitoring functions are predefined and fit the most frequent cases of use. They are ready to use and are implemented by simple parameter setting after the necessary logic inputs / outputs are assigned.
■ the predefined control and monitoring functions can be adapted for particular needs using the SFT2841 software, which offers the following customization options:
□ logic equation editor, to adapt and complete the predefined control and monitoring functions
□ creation of personalized messages for local annunciation
□ creation of personalized mimic diagrams corresponding to the controlled devices
□ customization of the control matrix by changing the assignment of output relays, LEDs and annunciation messages

Operating principle

The processing of each control and monitoring function may be broken down into 3 phases:
■ acquisition of input data:
□ results of protection function processing
□ external logic data, connected to the logic inputs of an optional MES120 input / output module
□ local control orders transmitted by the mimic-based UMI
□ remote control orders (TC) received via the communication link
■ actual processing of the control and monitoring function
■ utilization of the processing results:
□ activation of output relays to control a device
□ information sent to the facility manager:
- by message and/or LED on the Sepam display and SFT2841 software
- by remote indication (TS) via the communication link
- by real-time indications on device status on the animated mimic diagram.

Wired logic inputs and outputs

The number of Sepam inputs / outputs must be adapted to fit the control and monitoring functions used.
The 4 outputs included in the Easergy Sepam series 60 base unit may be extended by adding 1 or 2 MES120 modules with 14 logic inputs and 6 output relays.
After the number of MES120 modules required for the needs of an application is set, the logic inputs are assigned to functions. The functions are chosen from a list which covers the whole range of possible uses. The functions are adapted to meet needs within the limits of the logic inputs available. The inputs may also be inverted for undervoltage type operation.
A default input / output assignment is proposed for the most frequent uses.

PE80743



Maximum Easergy Sepam series 60 configuration with 2 MES120 modules: 28 inputs and 16 outputs.

GOOSE logic inputs and outputs

GOOSE logic inputs are used with the IEC 61850 communication protocol.
The GOOSE inputs are divided between the 2 GSE virtual modules with 16 logic inputs.
An example of implementing logic discrimination with GOOSE logic inputs is given on page 209.

Definition of symbols

This page gives the meaning of the symbols used in the block diagrams illustrating the different control and monitoring functions in this chapter.

Logic functions

■ **"OR"**

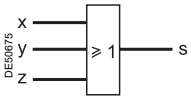

Equation: S = X + Y + Z.

■ **"AND"**

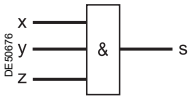

Equation: S = X x Y x Z.

■ **exclusive "XOR"**

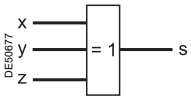

S = 1 if one and only one input is set to 1
(S = 1 if X + Y + Z = 1).

■ **Complement**

These functions may use the complement of one or more input values.

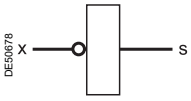

Equation: S = $\overline{X}$ (S = 1 if X = 0).

Delay timers

Two types of delay timers:

■ "on" delay timer: used to delay the appearance of a signal by a time T

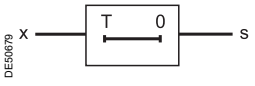

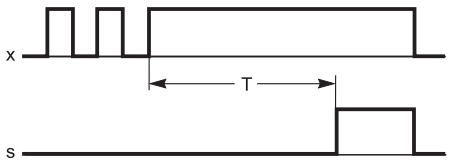

■ "off" delay timer: used to delay the disappearance of a signal by a time T.

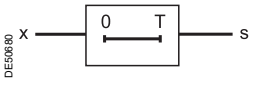

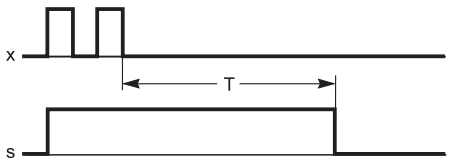

Pulse mode operation

■ "on" pulse: used to create a short-duration pulse (1 cycle) each time a signal appears

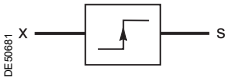

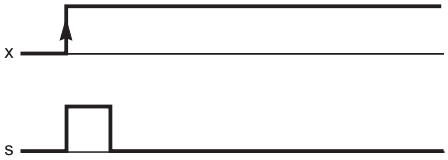

■ "off" pulse: used to create a short-duration pulse (1 cycle) each time a signal disappears.

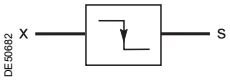

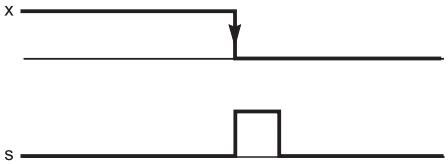

Note: *the disappearance of a signal may be caused by an auxiliary power failure.*

Bistable functions

Bistable functions may be used to store values.

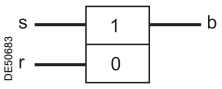

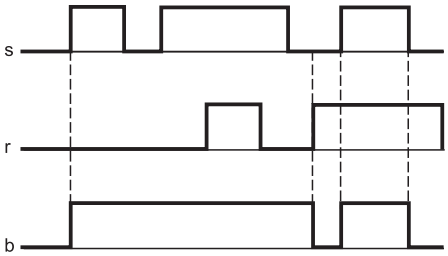

Equation: B = S + $\overline{R}$ x B.

Logic input / output assignment

Inputs and outputs may be assigned to predefined control and monitoring functions using the SFT2841 software, according to the uses listed in the table below.
The control logic of each input may be inverted for undervoltage type operation.
All the logic inputs, whether or not assigned to predefined functions, may be used for the customization functions according to specific application needs:
■ in the control matrix (SFT2841 software), to connect an input to a logic output, a LED on the front of Sepam or a message for local indication on the display
■ in the logic equation editor (SFT2841 software), as logic equation variables.

Logic output (Ox) assignment table

Functions	S60	S62	T60	T62	M61	G60	G62	C60	Assignment
Tripping / contactor control	■	■	■	■	■	■	■	■	O1
Inhibit closing	■	■	■	■	■	■	■	■	O2 by default
Closing	■	■	■	■	■	■	■	■	O3 by default
Watchdog	■	■	■	■	■	■	■	■	O5
Logic discrimination, blocking send 1	■	■	■	■	■	■	■	■	O102 by default
Logic discrimination, blocking send 2		■		■			■		O103 by default
Genset shutdown						■	■		Free
De-excitation						■	■		Free
Load shedding					■				Free
AT, closing of NO circuit breaker	■	■	■	■		■	■		Free
AT, closing of coupling	■	■	■	■		■	■		Free
AT, opening of coupling	■	■	■	■		■	■		Free

Note: *The logic outputs assigned by default may be freely reassigned.*

Assignment table for logic inputs (Ix) common to all applications

Functions	S60	S62	T60	T62	M61	G60	G62	C60	Assignment
Closed circuit breaker	■	■	■	■	■	■	■	■	I101
Open circuit breaker	■	■	■	■	■	■	■	■	I102
Synchronization of Sepam internal clock via external pulse	■	■	■	■	■	■	■	■	I103
Switching of groups of settings A/B	■	■	■	■	■	■	■	■	Free
External reset	■	■	■	■	■	■	■	■	Free
Earthing switch closed	■	■	■	■	■	■	■	■	Free
Earthing switch open	■	■	■	■	■	■	■	■	Free
External trip 1	■	■	■	■	■	■	■	■	Free
External trip 2	■	■	■	■	■	■	■	■	Free
External trip 3	■	■	■	■	■	■	■	■	Free
End of charging position	■	■	■	■	■	■	■	■	Free
Inhibit remote control (Local)	■	■	■	■	■	■	■	■	Free
SF6 pressure default	■	■	■	■	■	■	■	■	Free
Inhibit closing	■	■	■	■	■	■	■	■	Free
Open order	■	■	■	■	■	■	■	■	Free
Close order	■	■	■	■	■	■	■	■	Free
Phase VT fuse blown	■	■	■	■	■	■	■	■	Free
V0 VT fuse blown	■	■	■	■	■	■	■	■	Free
External positive active energy meter	■	■	■	■	■	■	■	■	Free
External negative active energy meter	■	■	■	■	■	■	■	■	Free
External positive reactive energy meter	■	■	■	■	■	■	■	■	Free
External negative reactive energy meter	■	■	■	■	■	■	■	■	Free
Racked out circuit breaker	■	■	■	■	■	■	■	■	Free
Switch A closed	■	■	■	■	■	■	■	■	Free
Switch A open	■	■	■	■	■	■	■	■	Free
Switch B closed	■	■	■	■	■	■	■	■	Free
Switch B open	■	■	■	■	■	■	■	■	Free
Closing-coil monitoring	■	■	■	■	■	■	■	■	Free
Phase rotation direction 123	■	■	■	■	■	■	■	■	Free
Phase rotation direction 132	■	■	■	■	■	■	■	■	Free
Data log activation	■	■	■	■	■	■	■	■	Free

Logic input / output assignment

Assignment table for logic inputs (Ix) by application

Functions	S60	S62	T60	T62	M61	G60	G62	C60	Assignment
Inhibit recloser	■	■							Free
Inhibit thermal overload		■	■	■	■	■	■	■	Free
Switching of thermal settings			■	■	■	■	■		Free
Blocking reception 1	■	■	■	■		■	■		Free
Blocking reception 2		■		■			■		Free
Buchholz trip			■	■	■	■	■		Free
Thermostat trip			■	■	■	■	■		Free
Pressure trip			■	■	■	■	■		Free
Thermistor trip			■	■	■	■	■		Free
Buchholz alarm			■	■	■	■	■		Free
Thermostat alarm			■	■	■	■	■		Free
Pressure alarm			■	■	■	■	■		Free
Thermistor alarm			■	■	■	■	■		Free
Rotor speed measurement					■	■	■		I104
Rotor rotation detection					■				Free
Motor re-acceleration					■				Free
Load shedding request					■				Free
Inhibit undercurrent					■				Free
Trigger Motor start report									Free
Authorize emergency restart									Free
Priority genset shutdown						■	■		Free
De-excitation						■	■		Free
Close enable (ANSI 25)	■	■	■	■		■	■		Free
Inhibit opposite-side remote control (local)	■	■	■	■		■	■		Free
Inhibit remote-control coupling (local)	■	■	■	■		■	■		Free
Coupling open	■	■	■	■		■	■		Free
Coupling closed	■	■	■	■		■	■		Free
Opposite side open	■	■	■	■		■	■		Free
Opposite side closed	■	■	■	■		■	■		Free
Selector set to Manual (ANSI 43)	■	■	■	■		■	■		Free
Selector set to Auto (ANSI 43)	■	■	■	■		■	■		Free
Selector set to Circuit breaker (ANSI 10)	■	■	■	■		■	■		Free
Selector set to Coupling (ANSI 10)	■	■	■	■		■	■		Free
Opposite-side circuit breaker disconnected	■	■	■	■		■	■		Free
Coupling circuit breaker disconnected	■	■	■	■		■	■		Free
Coupling close order	■	■	■	■		■	■		Free
Opposite-side voltage OK	■	■	■	■		■	■		Free
Inhibit closing of coupling	■	■	■	■		■	■		Free
Automatic closing order	■	■	■	■		■	■		Free

Assignment table for logic GOOSE inputs Gx (IEC 61850) by application

Functions	S60	S62	T60	T62	M61	G60	G62	C60	Assignment
Blocking reception 1	■	■	■	■		■	■		Free
Blocking reception 2		■		■			■		Free
External trip 2	■	■	■	■	■	■	■	■	Free
Inhibit closing	■	■	■	■	■	■	■	■	Free
GOOSE reception fault	■	■	■	■	■	■	■	■	Free
GOOSE reception indicator	■	■	■	■	■	■	■	■	Free
Other use	■	■	■	■	■	■	■	■	Free
ACE850 presence	■	■	■	■	■	■	■	■	G516
Load shedding request					■				Free
Data log activation	■	■	■	■	■	■	■	■	Free
Phase rotation direction 123	■	■	■	■	■	■	■	■	Free
Phase rotation direction 132	■	■	■	■	■	■	■	■	Free
Data log activation	■	■	■	■	■	■	■	■	Free

Note: *GOOSE IEC 61850 logic inputs/outputs can only be used with the ACE850TP or ACE850FO communication interface, and only with Easergy Sepam series 60 or series 80.*

Standard logic input (Ix) assignment

The table below lists the logic input (Ix) assignments obtained with the SFT2841 configuration software by clicking on the "standard assignment" button.

Functions	Standard assignment	Application
Closed circuit breaker	I101	All
Open circuit breaker	I102	All
Blocking reception 1	I103	All except M61 and C60
Blocking reception 2	I104	S62, T62 and G62
Close enable (ANSI 25)	I104	All except M61 and C60
SF6 pressure default	I105	All
Open order	I106	All
Close order	I107	All
Inhibit recloser	I108	S60 and S62
Buchholz trip	I108	T60, T62
Thermostat trip	I109	T60, T62
Pressure trip	I110	T60, T62
Thermistor trip	I111	T60, T62
Buchholz alarm	I112	T60, T62
Thermostat alarm	I113	T60, T62
Pressure alarm	I114	T60, T62
Selector set to Circuit Breaker (ANSI 10)	I201	S60, S62, T60, T62, G60, G62
Selector set to Coupling (ANSI 10)	I202	S60, S62, T60, T62, G60, G62
Selector set to Auto (ANSI 43)	I203	S60, S62, T60, T62, G60, G62
Selector set to Manual (ANSI 43)	I204	S60, S62, T60, T62, G60, G62
Opposite side closed	I205	S60, S62, T60, T62, G60, G62
Opposite side open	I206	S60, S62, T60, T62, G60, G62
Opposite-side voltage OK	I207	S60, S62, T60, T62, G60, G62
Inhibit opposite side remote control (local)	I208	S60, S62, T60, T62, G60, G62
Automatic closing order	I209	S60, S62, T60, T62, G60, G62
Coupling open	I210	S60, S62, T60, T62, G60, G62
Coupling closed	I211	S60, S62, T60, T62, G60, G62
Inhibit closing of coupling	I212	S60, S62, T60, T62, G60, G62
Coupling close order	I213	S60, S62, T60, T62, G60, G62
Inhibit remote-control coupling (local)	I214	S60, S62, T60, T62, G60, G62

Standard GOOSE logic input (Gx) assignment

The table below lists the GOOSE logic input (Gx) assignments obtained with the SFT2841 configuration software by clicking on the "standard assignment" button.

Functions	Standard assignment	Application
Blocking reception 1	G401	All
Blocking reception 2	G402	S62, T62, G62
External trip 2	G403	All
Inhibit closing	G404	All

Any of 31 GOOSE logic inputs can be selected, from G401 to G416 and G501 to G515.

Switchgear control
ANSI code 94/69

Predefined circuit breaker or contactor control function.

Operation

The Switchgear control function can control the following types of breaking device:
- circuit breakers with shunt trip or undervoltage coils
- latching contactors with shunt trip coils
- contactors with latched orders.

This function comprises two parts:
- processing of internal switchgear control orders:
  - open 1, 2, 3
  - close with or without synchro-check 6, 7, 8
  - inhibit closing 4, 5
- execution of internal orders by control logic outputs according to the type of device to be controlled.

Processing of internal switchgear control orders

The Switchgear control function processes all breaking device closing and tripping conditions, based on:
- protection functions (configured to trip the breaking device)
- breaking device status data
- remote control via the communication link
- local control orders by logic input (Ix or Gx), or by mimic-based UMI
- internal control orders created by logic equation
- specific predefined control functions for each application:
  - recloser
  - genset shutdown, de-excitation
  - load shedding
  - synchro-check
  - automatic transfer.

The function also inhibits breaking device closing, according to the operating conditions.

Anti-pumping function

To prevent simultaneous breaking device open and close orders and to give priority to open orders, breaker device close orders are of the pulse type.

Switchgear control with lockout function (ANSI 86)

The ANSI 86 function traditionally performed by lockout relays may be ensured by Sepam using the Switchgear control function, with latching of all the tripping conditions (protection function outputs and logic inputs).
Sepam performs:
- grouping of all the tripping conditions and breaking device control
- latching of the tripping order, with inhibition of closing, until the cause of tripping disappears and is acknowledged by the user (see Latching / acknowledgement function)
- indication of the cause of tripping:
  - locally by LEDs (Trip and others) and by messages on the display
  - remotely by remote indications (see Indications function).

Closing with synchro-check 9

The Synchro-check function checks the voltages upstream and downstream of a circuit breaker to ensure safe closing.
It is put into service by parameter setting.
For it to operate, one of the “Close enable” logic outputs of an MCS025 remote module must be connected to a Sepam logic input assigned to the Close enable function.
If it is necessary to close the circuit breaker without taking into account the synchronization conditions, this may be done by a logic equation or via the V_CLOSE_NOCTRL input.

Control of logic outputs

Logic orders from the Switchgear control function are used to control the Sepam logic outputs that control breaking device opening and closing.
Logic output control is set up to match the device to be controlled, i.e. a circuit breaker or contactor.

Block diagram

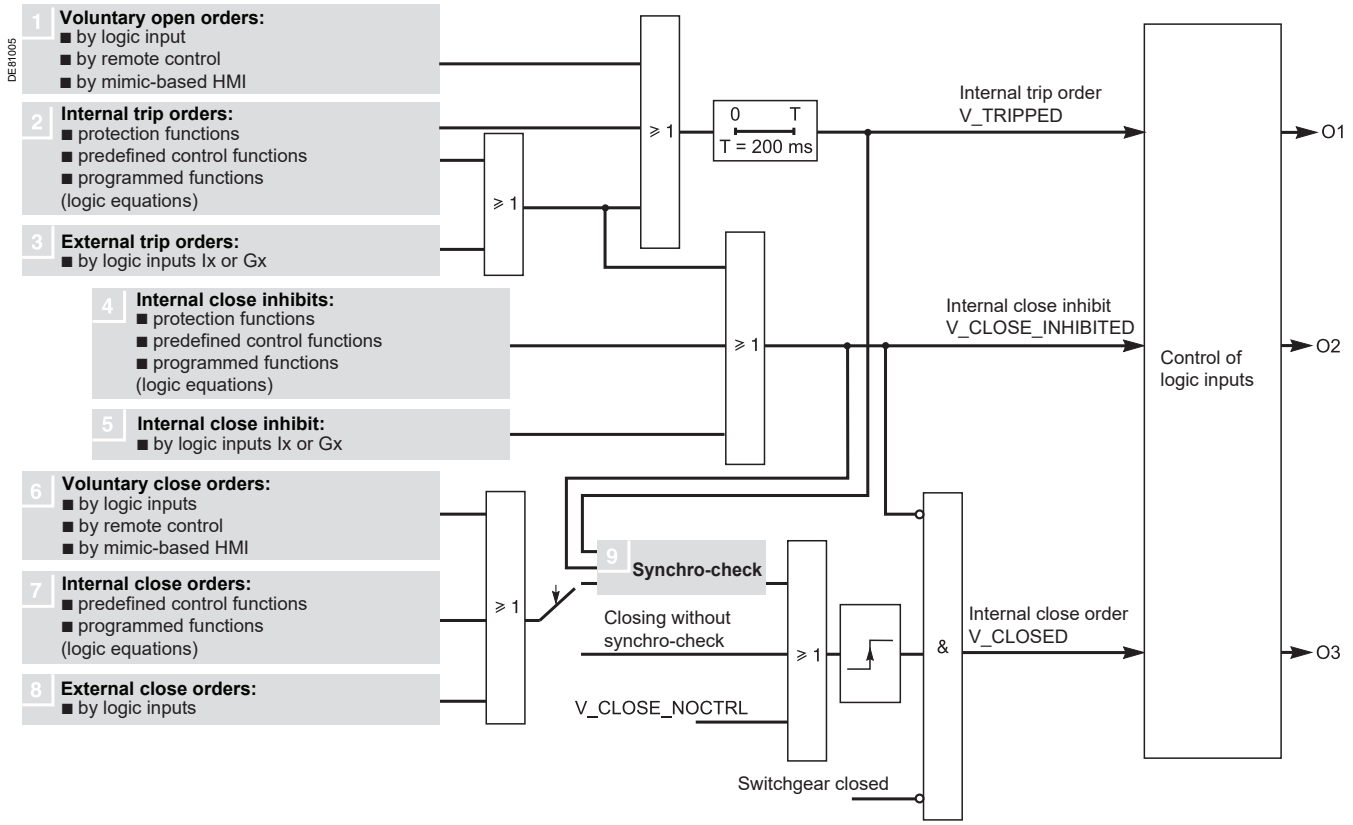

Control of logic outputs

Control of a circuit breaker or contactor with mechanical latching
The block diagram below represents the following parameter setting:
- type of switchgear = Circuit Breaker
- output O1 = trip
- output O2 = close inhibit
- output O3 = close.

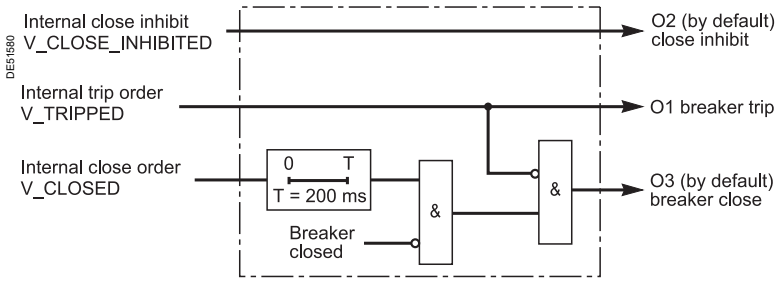

Control of a contactor without mechanical latching
The block diagram below represents the following parameter setting:
- type of switchgear = Contactor
- output O1 = open / close.

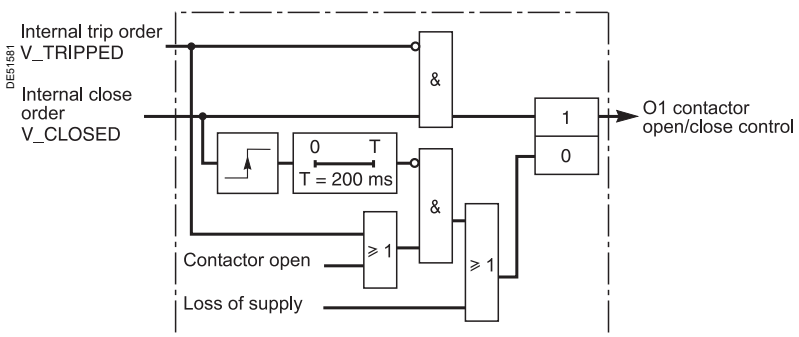

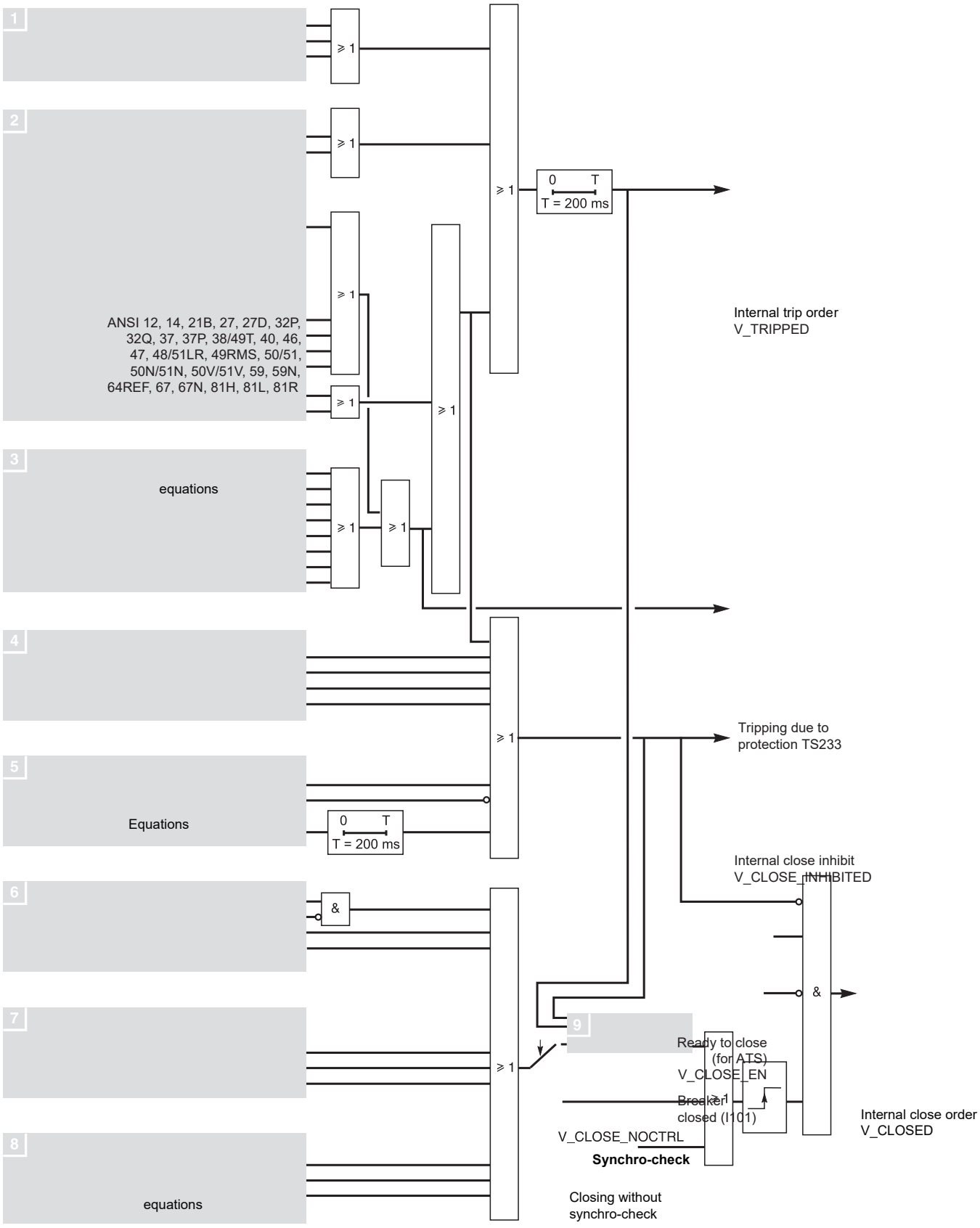
1
2
ANSI 12, 14, 21B, 27, 27D, 32P, 32Q, 37, 37P, 38/49T, 40, 46, 47, 48/51LR, 49RMS, 50/51, 50N/51N, 50V/51V, 59, 59N, 64REF, 67, 67N, 81H, 81L, 81R
3
equations
4
5
Equations
6
7
8
equations
≥ 1
&
0 T
T = 200 ms
Internal trip order
V_TRIPPED
Tripping due to protection TS233
Internal close inhibit
V_CLOSE_INHIBITED
9
Ready to close (for ATS)
V_CLOSE_EN
Breaker closed (I101)
V_CLOSE_NOCTRL
Synchro-check
Closing without synchro-check
Internal close order
V_CLOSED

x)

Close enable by the Synchro-check function

Operation

The close request, made locally or remotely, is maintained by Sepam during the close request delay and triggers the appearance of a "SYNC.IN PROCESS" message. It is deactivated when a tripping order or circuit breaker inhibition order is received and triggers the "STOP SYNC." message.

The closing order is given if the close enable is received before the close request delay runs out. When this is the case, the message "SYNC. OK" is displayed.

If the close enable is not received, the message "SYNC. FAILURE" is displayed. When possible and if the MCS025 remote module is connected by the CCA785 cord to the Sepam to which the close request has been made, an additional message indicates the type of synchronization failure:

- "SYNC. FAILED dU" for too high a voltage difference
- "SYNC. FAILED DF" for too high a frequency difference
- "SYNC. FAILED dPhi" for too high a phase difference.

An additional delay is used to confirm the close enable to guarantee that the closing conditions last long enough.

Block diagram

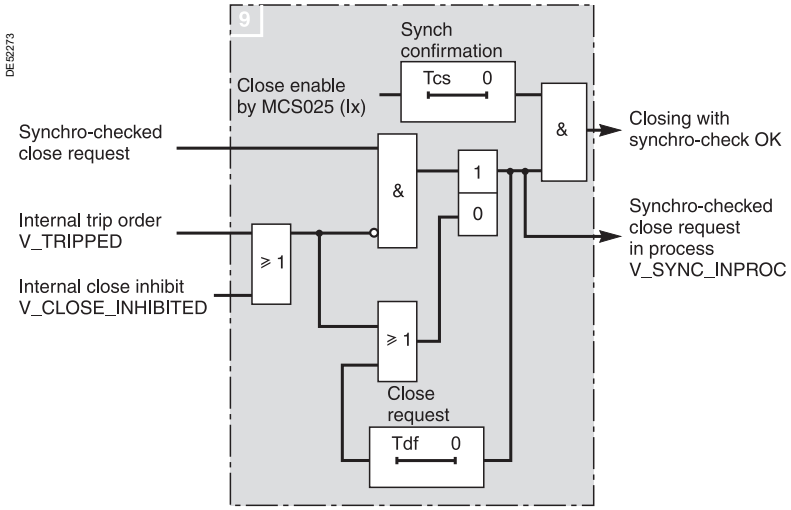

PE50454

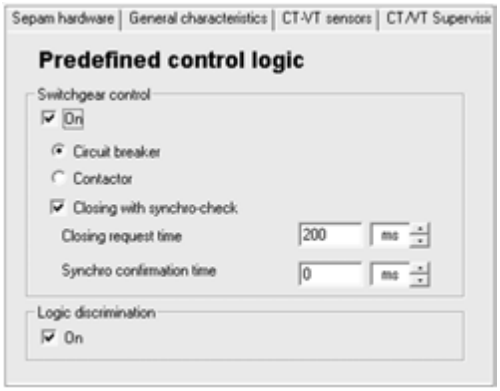

SFT2841: parameter setting of Switchgear control.

PE80754

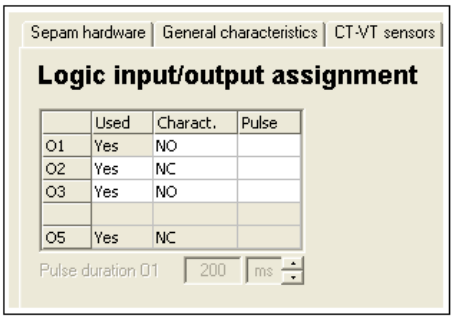

SFT2841: default parameter setting of the logic outputs assigned to Switchgear control.

Parameter setting

The Switchgear control function is set up and adapted to match the type of breaking device to be controlled using the SFT2841 software.

"Control logic" tab

- activation of the Switchgear control function
- choice of the type of breaking device to be controlled: circuit breaker (by default) or contactor
- activation of the Synchro-check function, if necessary.

"Logic I/Os" tab

- assignment of the logic inputs required
- definition of logic output behavior.

By default, the following outputs are used:

Logic output	Associated internal order	Circuit breaker coil
O1	Trip (V_TRIPPED)	Shunt trip coil
O2	Close inhibit (V_CLOSE_INHIBITED)	Undervoltage coil
O3	Close (V_CLOSED)	Shunt trip coil

- the Trip order is always associated with output O1.

If output O1 is set up for pulse type operation, the pulse order duration may be set up

- the optional Close inhibit and Close orders may be assigned to any logic output.

"Matrix" screen, "Logic" button

Modification of the default internal order assignment to outputs O2 and O3, if necessary.

Switchgear control
ANSI code 94/69

Characteristics

Settings			
Switchgear control			
Setting range	On / Off		
Type of device			
Setting range	Circuit breaker / Contactor		
Tripping pulse duration (output O1)			
Setting range	200 ms to 300 s		
Accuracy (1)	±2 % or from -10 ms to +25 ms		
Resolution	10 ms or 1 digit		
Closing with synchro-check			
Setting range	On / Off		
Close request time delay Tdf			
Setting range	0 to 300 s		
Accuracy (1)	±2 % or from -10 ms to +25 ms		
Resolution	10 ms or 1 digit		
Synchro confirmation time delay Tcs			
Setting range	0 to 300 s		
Accuracy (1)	±2 % or from -10 ms to +25 ms		
Resolution	10 ms or 1 digit		
Inputs			
Designation	**Syntax**	**Equations**	
Tripping, opening	V_TRIPCB	■	
Inhibit closing	V_INHIBECLOSE	■	
Closing	V_CLOSECB	■	
Closing without synchro-check	V_CLOSE_NOCTRL	■	
Outputs			
Designation	**Syntax**	**Equations**	**Matrix**
Tripping, opening	V_TRIPPED	■	■
Inhibit closing	V_CLOSE_INHIBITED	■	■
Closing	V_CLOSED	■	■
Contactor control	V_CONTACTOR		■
Synchro-check on	V_SYNC_ON		■
Sychrochecked close request in process	V_SYNC_INPROC		■
Synchrochecked close request stop	V_SYNC_STOP		■
Synchrochecked close request successful	V_SYNC_OK		■
Synchrochecked close request failure	V_NOSYNC		■
Synchrochecked close request failure - Voltage difference too high	V_NOSYNC_DU		■
Synchrochecked close request failure - Frequency difference too high	V_NOSYNC_DF		■
Synchrochecked close request failure - Phase difference too high	V_NOSYNC_DPHI		■

(1) *Under reference conditions (IEC 60255-6).*

TS/TC equivalence for each protocol

Modbus	DNP3	IEC 60870-5-103	IEC 61850
TC	**Binary Output**	**ASDU, FUN, INF**	**LN.DO.DA**
TC1	BO0	20, 21, 1 (OFF)	CSWI1.Pos.ctlVal
TC2	BO1	20, 21, 1 (ON)	CSWI1.Pos.ctlVal
TS	**Binary Input**	**ASDU, FUN, INF**	**LN.DO.DA**
TS233	BI334	2, 160, 68	

Latching / acknowledgement

Operation

The tripping outputs of all the protection functions and all the logic inputs (Ix) may be latched individually.
Logic outputs may not be latched. Logic outputs set up as pulse-type outputs maintain pulse-type operation even when they are linked to latched data.
Latched data are saved in the event of an auxiliary power failure.
All latched data are acknowledged together, at the same time. Acknowledgement is done:

- locally on the UMI using the (reset) key
- or remotely via a logic input, the SFT2841 software or via the communication link
- or by logic equation.

The remote indication TS5 remains present after latching operations until acknowledgement has taken place.
The Latching/acknowledgement function associated with the Switchgear control function may be used to perform the ANSI 86 Lockout relay function.

Block diagram

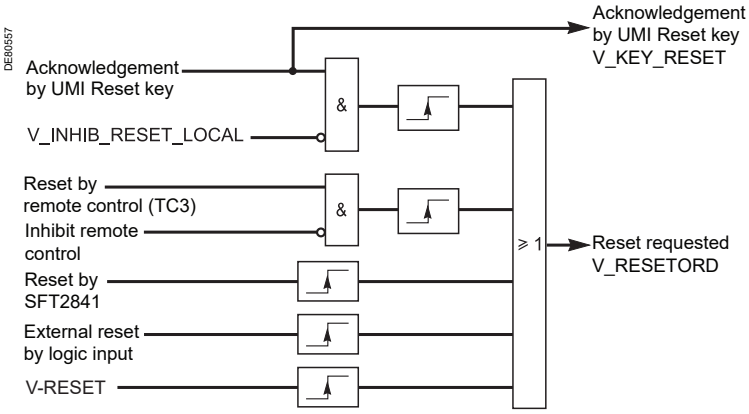

Characteristics

Inputs		
Designation	**Syntax**	**Equations**
Inhibition of UMI Reset key	V_INHIB_RESET_LOCAL	■
Acknowledgement by logic equation	V_RESET	■

TS/TC equivalence for each protocol

Modbus	DNP3	IEC 60870-5-103	IEC 61850
TS	**Binary Input**	**ASDU, FUN, INF**	**LN.DO.DA**
TS5	BI0	1, 160, 19	LLN0.LEDRs.stVal
TC	**Binary Output**	**ASDU, FUN, INF**	**LN.DO.DA**
TC3	BO2	20, 160, 19	LLN0.LEDRs.ctlVal

TC / switchgear position discrepancy
Tripping

TC / switchgear position discrepancy

Operation

This function detects a discrepancy between the last remote control order received and the actual position of the circuit breaker or contactor.
The information is accessible in the matrix and via the remote indication TS3.

Block diagram

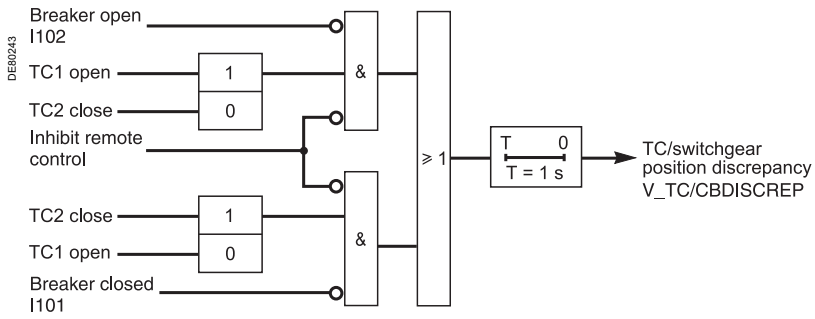

Characteristics

Outputs			
Designation	**Syntax**	**Equations**	**Matrix**
TC/ switchgear position discrepancy	V_TC/CBDISCREP		■

TS/TC equivalence for each protocol

Modbus	DNP3	IEC 60870-5-103	IEC 61850
TC	**Binary Output**	**ASDU, FUN, INF**	**LN.DO.DA**
TC1	BO0	20, 21, 1 (OFF)	CSWI1.Pos.ctlVal
TC2	BO1	20, 21, 1 (ON)	CSWI1.Pos.ctlVal
TS	**Binary Input**	**ASDU, FUN, INF**	**LN.DO.DA**
TS3	BI18	-	-

Tripping

Description

The information can be accessed via remote indication TS233.
It indicates whether a Sepam internal or external protection has tripped.

TS/TC equivalence for each protocol

Modbus	DNP3	IEC 60870-5-103	IEC 61850
TS	**Binary Input**	**ASDU, FUN, INF**	**LN.DO.DA**
TS233	BI334	2, 160, 68	-

Disturbance-recording trigger

Operation

The recording of analog and logic signals may be triggered by different events, dependent on the control matrix parameter setting or manual action:

- triggering by the grouping of all pick-up signals of the protection functions in service
- triggering by the delayed outputs of selected protection functions
- triggering by selected logic inputs
- triggering by selected Vx outputs (logic equations)
- manual triggering by a remote control order (TC20)
- manual triggering via the SFT2841 software tool
- triggering by selected logic inputs (Gx) (if recording configured in SFT2841 software disturbance recording screen).

Disturbance recording may be:

- inhibited via the SFT2841 software or by remote control order (TC18)
- validated via the SFT2841 software or by remote control order (TC19).

Block diagram

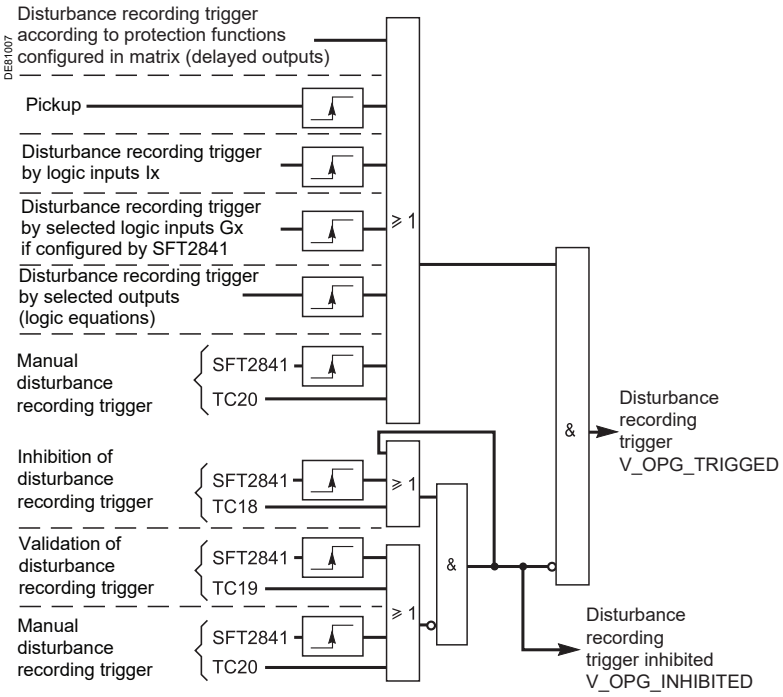

Characteristics

Outputs			
Designation	**Syntax**	**Equations**	**Matrix**
Disturbance recording function triggered	V_OPG_TRIGGED		■

TS/TC equivalence for each protocol

Modbus	DNP3	IEC 60870-5-103	IEC 61850
TC	**Binary Output**	**ASDU, FUN, INF**	**LN.DO.DA**
TC18	BO3	-	RDRE1.RcdInh.ctlVal
TC19	BO4	-	RDRE1.RcdInh.ctlVal
TC20	BO5	-	RDRE1.RcdTrg.ctlVal

Switching of groups of settings

Operation

There are two groups of settings, group A / group B, for the phase overcurrent, earth fault, directional phase overcurrent and directional earth fault protection functions. Switching from one group of settings to another makes it possible to adapt the protection characteristics to suit the electrical environment of the application (change of earthing system, changeover to local power generation, ...). The switching of settings is global and therefore applies to all the units of the protection functions mentioned above.

The groups of settings switching mode is determined by parameter setting:

- switching according to the position of a logic input (0 = group A, 1 = group B)
- switching by remote control order (TC33, TC34)
- forced group A or group B.

Block diagram

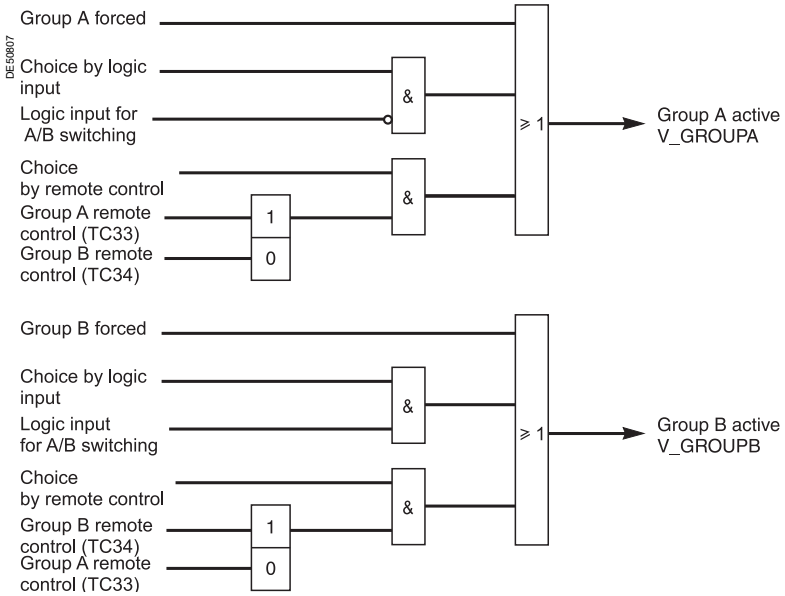

TS/TC equivalence for each protocol

Modbus	DNP3	IEC 60870-5-103	IEC 61850
TC	**Binary Output**	**ASDU, FUN, INF**	**LN.DO.DA**
TC33	BO8	20, 160, 23	LLN0.SGCB
TC34	BO9	20, 160, 24	LLN0.SGCB

Logic discrimination
Principle

Operation

This function considerably reduces the tripping time of the circuit breakers closest to the source and may be used for logic discrimination in closed ring networks.
It applies to the phase 50/51, directional phase overcurrent 67, earth fault 50N/51N and directional earth fault 67N overcurrent protections, definite time and IDMT.

Easergy Sepam series 60 discrimination logic comprises 2 discrimination groups. Each group includes:
- logic thresholds: protection units that send blocking signals (BSIG) and that may be prevented from tripping by the reception of blocking signals.
- time-based thresholds: protection units that may not be prevented from tripping by blocking signals and that do not send blocking signals. They are used as backup for the logic thresholds.

When a fault occurs:
- the logic thresholds detecting the fault send blocking signals
- the logic thresholds detecting the fault send a tripping order if they are not inhibited by blocking signals
- the time-based (backup) thresholds detecting the fault send a tripping order.

The sending of blocking signals lasts as long as it takes to clear the fault. If Sepam gives a tripping order, they are interrupted after a time delay that takes account of the breaking device operating time and the protection unit reset time. This system guarantees safety in downgraded operating situations (faulty wiring or switchgear).

Example: Radial distribution with use of time-based discrimination

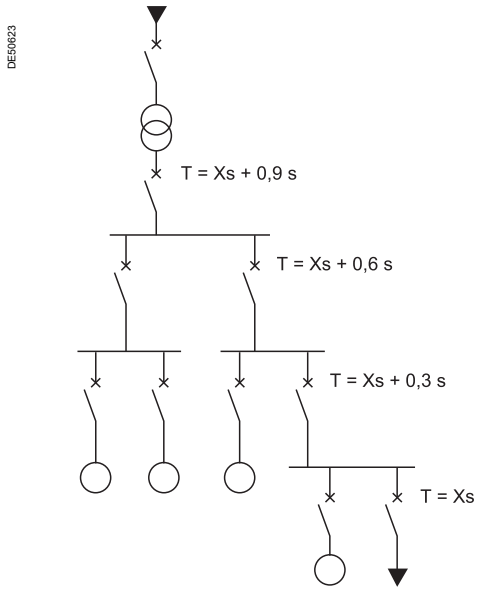

T: protection setting time. As an approximation for definite time curves, this is assumed to be equal to the protection tripping time.

The upstream protection units are typically delayed by 0.3 s to give the downstream protection units time to trip. When there are many levels of discrimination, the fault clearing time at the source is long.
In this example, if the fault clearing time for the protection unit furthest downstream is Xs = 0.2 s, the fault clearing time at the source is T = Xs + 0.9 s = 1.1 s.

Example: Radial distribution with use of logic discrimination

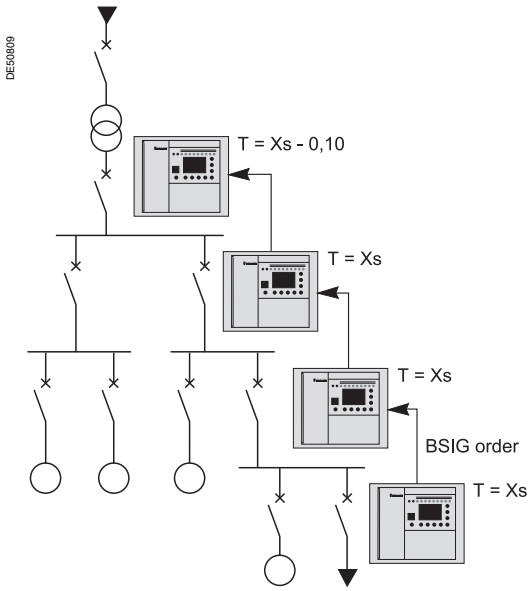

T: protection setting time. As an approximation for definite time curves, this is assumed to be equal to the protection tripping time.

When a fault appears, the protection units that detect it inhibit the upstream protection units. The protection unit furthest downstream trips since it is not blocked by another protection unit. The delays are to be set in accordance with the device to be protected.
In this example, if the fault clearing time for the protection unit furthest downstream is Xs = 0.2 s, the fault clearing time at the source is T = Xs - 0.1 s = 0.1 s.

Logic discrimination
Principle

Operation with logic inputs/outputs (Ix/Ox)

The assignment of protection devices between logic thresholds and time-based thresholds depends on the application and the logic input/output settings.
The first logic group is active if one of the following two conditions is fulfilled:
- blocking reception 1 is assigned to a logic input (Ix) except for motors where this input does not exist
- blocking send 1 is assigned to an output (O102 by default).

The second logic group, when present in the application, is active if one of the following two conditions is fulfilled:
- blocking reception 2 is assigned to a logic input (Ix)
- blocking send 2 is assigned to an output (O103 by default).

The SFT2841 software indicates the type of thresholds, logic or time-based, according to the input/output settings.

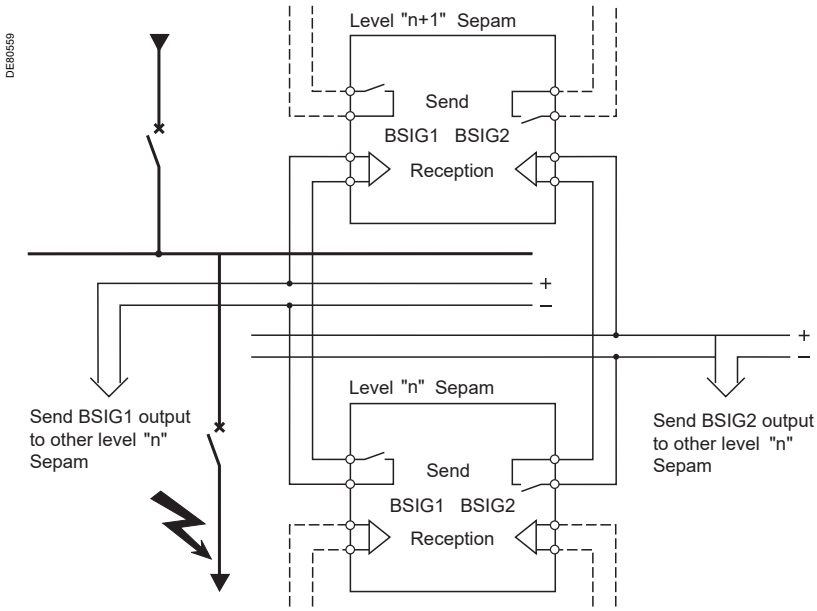

Logic discrimination using wired logic inputs and outputs (Ix and Ox)

The assignment of protection devices between the two discrimination groups is fixed and cannot be modified. When logic discrimination is used, it is important to check the concordance between the origin of the measurement and the logic discrimination group to which the unit is assigned.

Pilot wire test

The pilot wires may be tested using the output relay test function in the SFT2841 software.

Logic discrimination
Principle

Operation with GOOSE messages and logic inputs (Gx)

Equipped with the ACE850 interface, Easergy Sepam series 60 can be used for logic discrimination with GOOSE logic inputs and the IEC 61850 protocol on Ethernet TCP/IP.

The first logic group is active if one of the following two conditions is fulfilled:
- blocking reception 1 is assigned to a GOOSE logic input (G401 by default), except for Sepams used in motor applications where this input does not exist
- blocking send 1 is created by sending a GOOSE logic discrimination blocking message over the Ethernet network.

The second logic group, when present in the application, is active if one of the following two conditions is fulfilled:
- blocking reception 2 is assigned to a GOOSE logic input (G402 by default)
- blocking send 2 is created by sending a GOOSE logic discrimination blocking message over the Ethernet network.

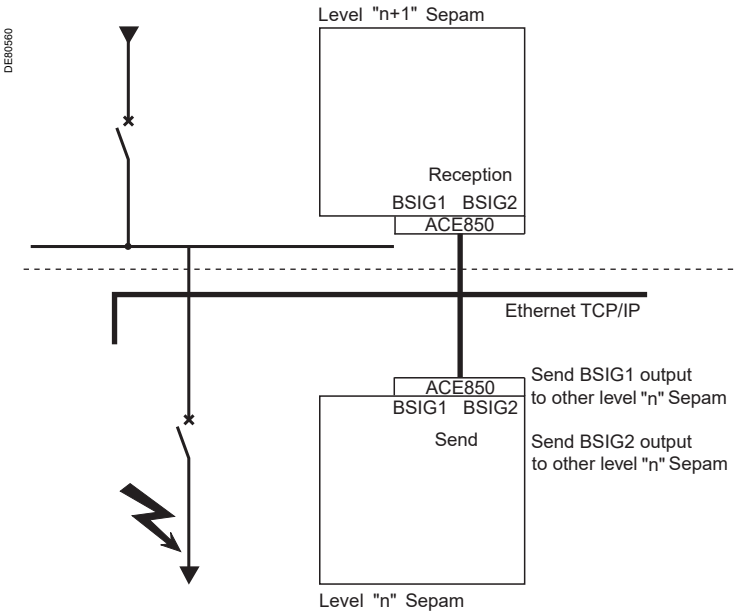

Logic discrimination using the IEC 61850 protocol and GOOSE logic inputs (Gx)

Logic discrimination
S60, T60, and G60 applications

Threshold assignment

Type of protection	Unit number Time-based	Send logic Group 1	Send logic Group 2	Reception logic Group 1	Reception logic Group 2
50/51	3, 4	1, 2	-	1, 2	-
50N/51N	3, 4	1, 2	-	1, 2	-

Characteristics

Settings			
Activity			
Setting range	On / Off		
Outputs			
Designation	**Syntax**	**Equations**	**Matrix**
Logic discrimination trip	V_LOGDSC_TRIP	■	■ (1)
Blocking send 1	V_LOGDSC_BL1	■	■

(1) *Only if switchgear control is not in service.*

Block diagram

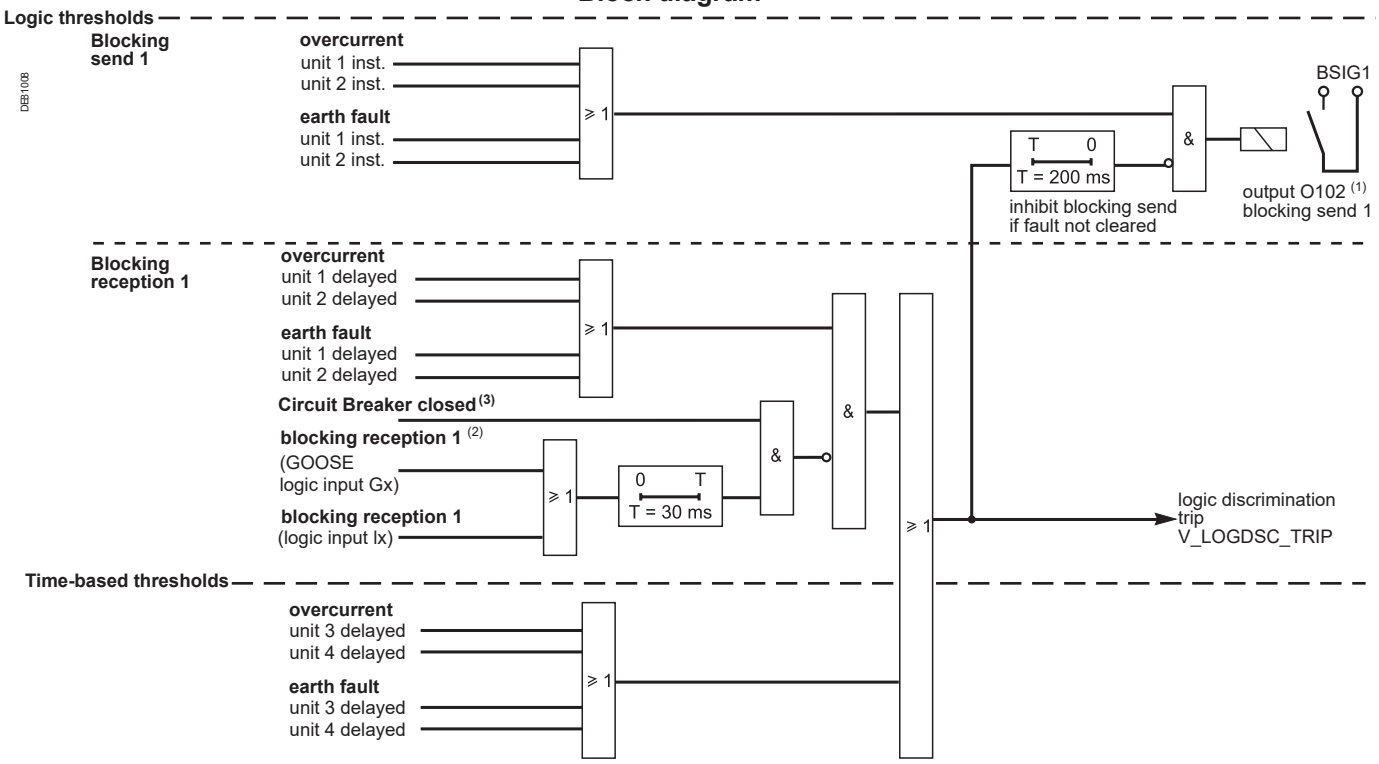

(1) By default.
(2) If using the ACE850 communication interface and a GOOSE logic input (IEC 61850).
(3) Condition ignored (always = 1) if no input is assigned to Circuit Breaker closed.

Logic discrimination
M61 and C60 applications

Threshold assignment

Type of protection	Unit number				
	Time-based	Send logic		Reception logic	
		Group 1	Group 2	Group 1	Group 2
50/51	3, 4	1, 2	-	-	-
50N/51N	3, 4	1, 2	-	-	-
67N (1)	2	1	-	-	-

(1) *For M61 application only.*

Characteristics

Settings			
Activity			
Setting range	On / Off		
Outputs			
Designation	**Syntax**	**Equations**	**Matrix**
Logic discrimination trip	V_LOGDSC_TRIP		■ (1)
Blocking send 1	V_LOGDSC_BL1		■

(1) *Only if switchgear control is not in service.*

Block diagram

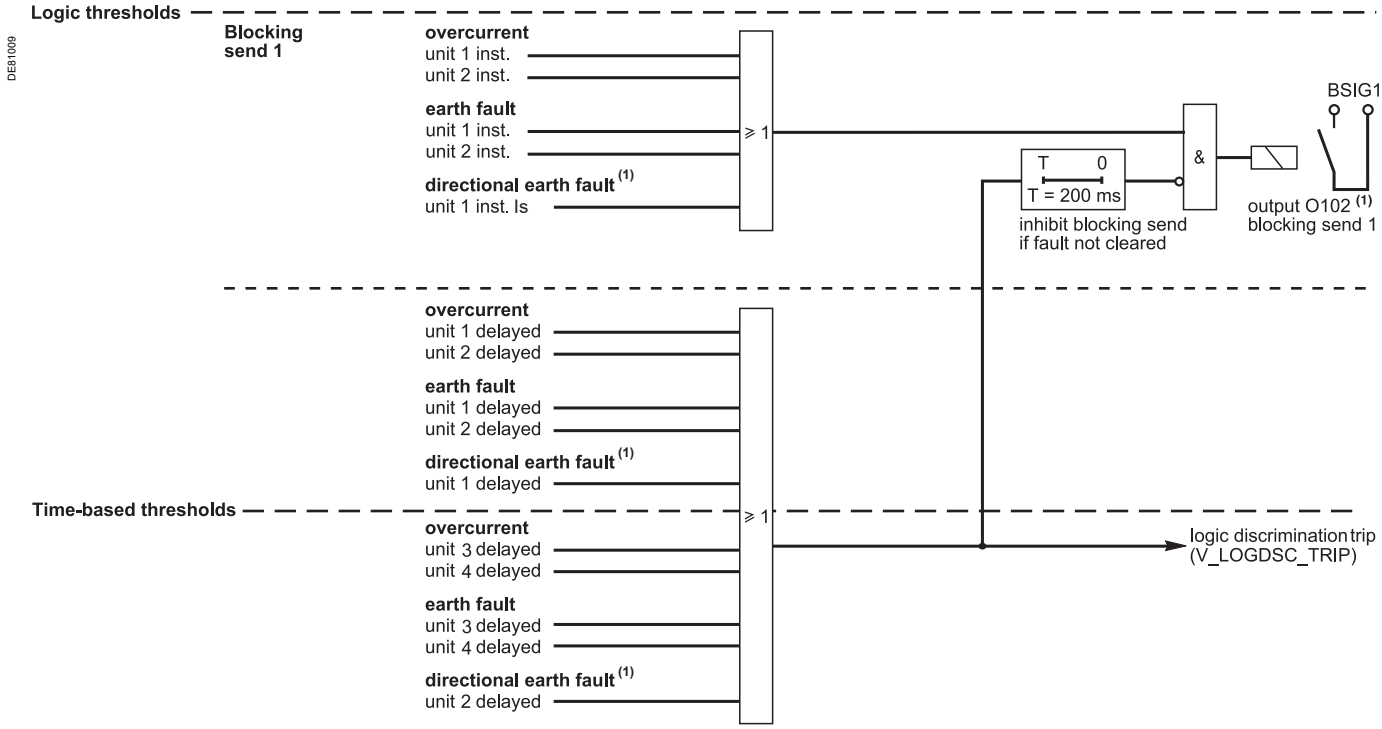

(1) *For M61 application only.*

Logic discrimination
S62, T62 and G62 applications

Block diagram

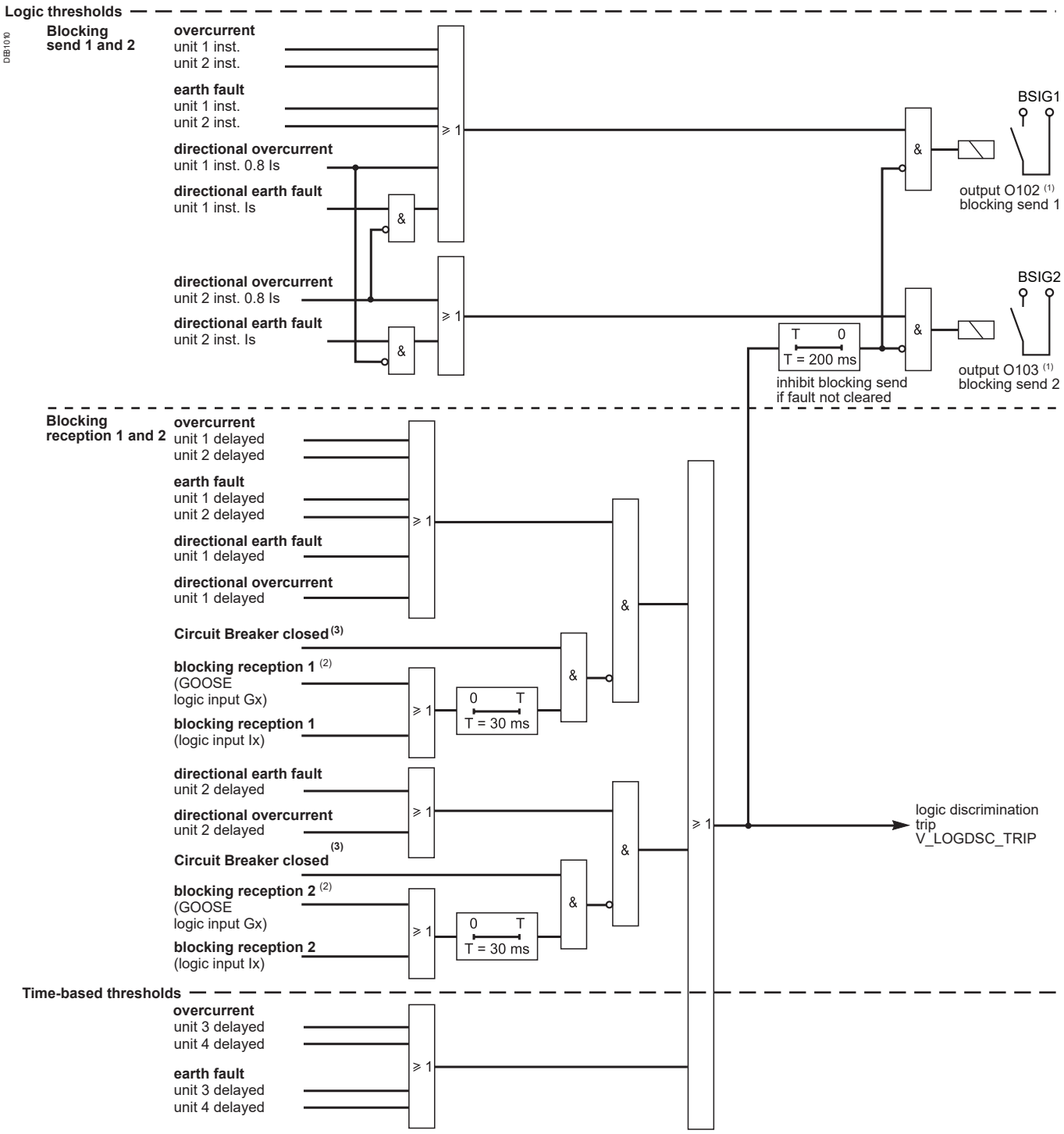

(1) By default.
(2) If using the ACE850 communication interface and a GOOSE logic input (IEC 61850).
(3) Condition ignored (always = 1) if no input is assigned to Circuit Breaker closed.

Threshold assignment

Type of protection	Unit number				
	Time-based	Send logic		Reception logic	
		Group 1	Group 2	Group 1	Group 2
50/51	3, 4	1, 2	-	1, 2	-
50N/51N	3, 4	1, 2	-	1, 2	-
67 (1)	-	1	2	1	2
67N (1)	-	1	2	1	2

(1) *According to application.*

Characteristics

Settings			
Activity			
Setting range	On / Off		
Outputs			
Designation	**Syntax**	**Equations**	**Matrix**
Logic discrimination trip	V_LOGDSC_TRIP		■ (1)
Blocking send 1	V_LOGDSC_BL1		■
Blocking send 2	V_LOGDSC_BL2		■

(1) *Only if switchgear control is not in service.*

Logic discrimination
Example of setting: radial network

When a fault occurs in a radial network, the fault current flows through the circuit between the source and the location of the fault:
- the protection units upstream from the fault are triggered
- the protection units downstream from the fault are not triggered
- only the first protection unit upstream from the fault should trip.

Example of setting

A 20 kV installation, supplied by a transformer, comprises the main busbars which in turn supply a feeder to a motor substation and a long feeder to a distant MV/LV transformer. The installation is earthed via a resistor at the incoming transformer neutral point, which limits to the current to about 10 Amps.

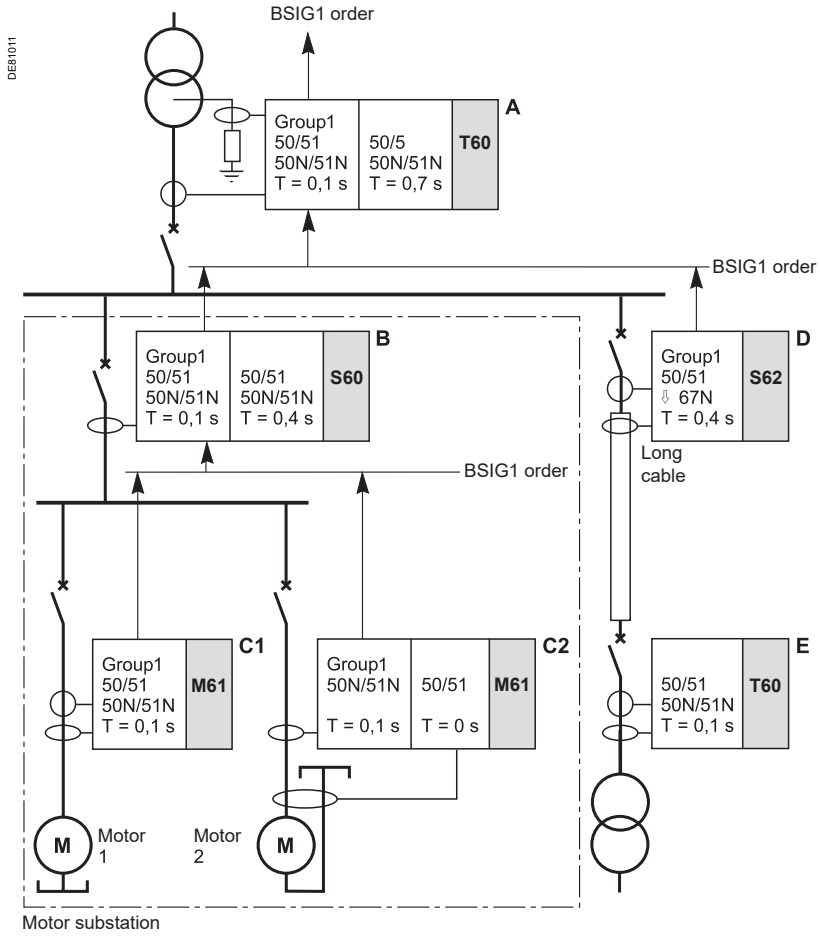

⇧ *: detected fault direction according to the directional protections*

:direction of blocking signal orders

Logic discrimination
Example of setting: radial network

Protection settings
Based on a network coordination study, the installation relay settings are as follows:
■ incomer: Sepam T60 (relay A)
□ busbar fault thresholds
50/51, 50N/51N: T = 0.1 s (DT)
Logic discrimination group 1:
- blocked by relays B and D
- blocking send 1 to high voltage relays
□ backup thresholds
50/51, 50N/51N: T = 0.7 s (DT)
Time-based thresholds
■ feeder to motor substation: Sepam S62 (relay B)
□ busbar fault thresholds
50/51, 50N/51N: T = 0.1 s (DT)
Logic discrimination group 1:
- blocked by relays C1 and C2
- blocking send 1 to relay A
□ backup thresholds
50/51, 50N/51N: T = 0.4 s (DT)
Time-based thresholds
■ motor feeders:
□ motor 1: Sepam M61 (relay C1)
motor fault thresholds
50/51, 50N/51N: T = 0.1 s (DT)
Logic discrimination group 1:
- blocking send 1 to relay B
□ motor 2: Sepam M61 (relay C2)
motor fault thresholds
- 50N/51N: T = 0.1 s (DT)
- 50/51 self-balancing differential scheme: T = 0 s (DT)
  Logic discrimination group 1: blocking send 1 to relay B
■ substation feeder: Sepam S62 (relay D)
□ cable fault thresholds
50/51, 67N: T = 0.4 s (DT)
□ these thresholds are set time-wise (0.4 s) in relation to Sepam T60 (0.1 s) (relay E)
□ blocking send 1 to Sepam T60 (relay A)
■ T60 transformer protection (relay E): settings which can be coordinated with the secondary.

The logic input and output settings for all the relays concerned are:
■ blocking reception 1 on I103
■ blocking send 1 on O102

Parameter setting using GOOSE data
When using GOOSE logic inputs (IEC 61850), the input and output parameters are:
■ blocking reception 1: Each Sepam should subscribe to the GOOSE blocking message 1
gcbBasicGse (LD0/PTRC1/blkInd1) concerning it and then assign this blocking GOOSE message to a GOOSE logic input (G401 by default for BSIG1).
■ blocking send 1: Each Sepam should generate a GOOSE blocking message called GOOSE Control Block standard which contains BSIG1 (gcbBasicGse (LD0/PTRC1/blkInd1)).

For more information, refer to the Sepam IEC 61850 communication user's manual, reference SEPED306024EN.

Logic discrimination
Example of setting: parallel incomers

Substations supplied by 2 (or more) parallel incomers may be protected using Sepam S62, T62 or G62, by a combination of directional phase (67) and earth fault (67N) protection functions, with the logic discrimination function.

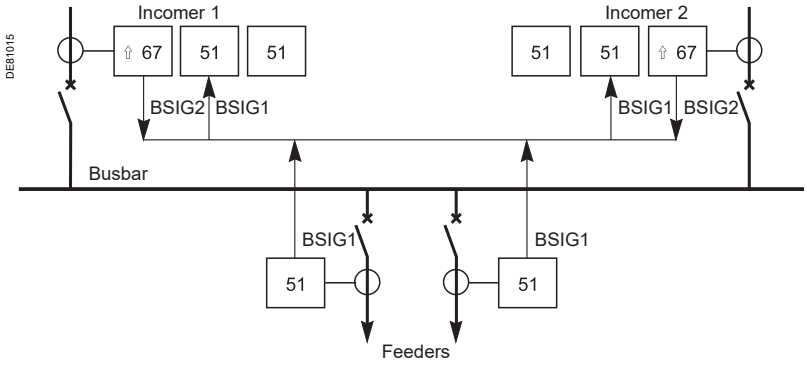

⇧ *: detected fault direction according to the directional protections*

▲ *: direction of blocking signal orders*

To avoid both incomers tripping when a fault occurs upstream from one incomer, the incomer protection devices must operate as follows:
- protection function 67 of the faulty incomer detects the fault current in the line direction, the protection tripping direction:
  - sends a blocking signal to inhibit the phase overcurrent protection functions (50/ 51) of both incomers
  - and initiates tripping of the incomer circuit breaker
- protection function 67 of the fault-free incomer is insensitive to fault current in the busbar direction.

Example of cabling

- Feeder Sepam: blocking send 1 blocks the Incomer Sepam 50/51 and 50N/51N functions.

By default, outputs O102 (blocking send 1) on the Feeder Sepams should be connected to the I103 inputs (blocking reception 1) on both Incomer Sepams.
- Directional protection function 67 unit 2 on each Incomer Sepam should be set to detect a fault on the line side. Thus the blocking send 2 output (by default O103) which is connected to input I103 can be used to inhibit the 50/51, 50N and 51N protection functions of both incomers so as to leave protection 67 unit 2 with the responsibility for tripping the incomer, the only one affected by the fault upstream.

Logic discrimination
Example of setting: parallel incomers

Example of setting with IEC 61850 GOOSE data

Setting the GOOSE data parameters

The following operations are performed using SFT850 and SFT2841 software:

■ In the event of a fault on the cables, Feeder Sepams should send a blocking input order in the form of a GOOSE (blocking send 1= LDO.PTRC1.BlkInd1) from the thresholds of units 1 and 2 of 50/51 or 50N/51N functions.

■ Incomer Sepams should also send a blocking signal when the directional protection functions detect a fault on the line. To do this, the thresholds of units 2 of protection functions 67 and 67N set for a line fault, which send the blocking signal (blocking send 2 = LDO.PTRC1.BlkInd2), can block the 50/51 and 50N/51N protection functions of the opposite incomer and their own thresholds respectively.

■ Both Incomer Sepams must subscribe to this GOOSE to receive the GOOSE blocking send 1 data item issued by the feeders and also to the GOOSE blocking send 2 data item issued by the opposite incomer and its own GOOSE.

■ A logical OR between the GOOSE sent by the feeder and the GOOSE sent by the opposite incomer is created by assigning the LDO.PTRC1.BlkInd1 and LDO.PTRC1.BlkInd2 data items to the same GOOSE input (for example G401).

■ This GOOSE input (G401) is assigned to the function **BSIG1,receive,blocking input** of each Incomer Sepam using the SFT2841 software.

Protection settings

The protection settings are the same as for hard-wired cabling:

■ When a fault occurs upstream of the incomer circuit breakers, the incomer concerned is tripped by the delayed directional threshold of unit 2 of the 67 or 67N protection functions.

■ When a fault occurs on the busbars, no blocking input is sent and therefore the 50/51 or 50N/51N protection functions quickly send a tripping order.

The thresholds of units 3 and 4 set using time discrimination provide backup tripping.

■ Units 1 of the 67 and 67N functions are not used.

Logic discrimination
Example of setting: closed ring network

Closed ring network protection may be provided by Sepam S62 or T62, which include the following functions:
- ■ 2 units of directional phase (67) and earth fault (67N) protection functions:
  - □ unit 2 to detect faults in the line direction
  - □ unit 1 to detect faults in the busbar direction
- ■ 2 discrimination groups:
  - □ sending of 2 blocking signals, sent in the opposite direction of the detected faults. For example, a Sepam which detects a fault on its line side sends a blocking signal to the Sepam located upstream, i.e. on its busbar side.
  - □ reception of 2 blocking signals, to block the directional protection relays according to the detection direction.

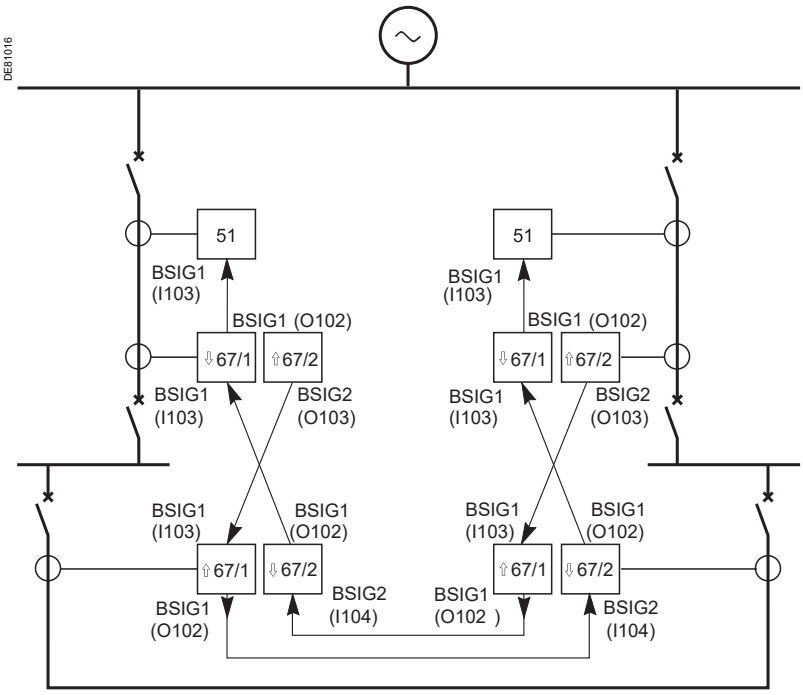

⇧, ⇩ *: detected fault direction according to the directional protections*

: direction of blocking signal orders

With the combination of directional protection functions and the logic discrimination function, the faulty section may be isolated with a minimal delay by tripping of the circuit breakers on either side of the fault.
Blocking signals are initiated by both protection functions 67 and 67N.
Priority is given to protection function 67: when protection functions 67 and 67N detect faults in opposite directions at the same time, the blocking signal sent is determined by the direction of the fault detected by protection function 67.
The instantaneous output of protection functions 67 and 67N, activated at 80% of the Is threshold, is used to send blocking signals. This avoids uncertainty when the fault current is close to the Is threshold.

Logic discrimination
Example of setting: closed ring network

Example of cabling

To simplify on-site cabling the following rules must be observed.

General rules

■ The cabling for CTs and VTs is identical on all cubicles and conforms to the connection diagrams in the Sepam documentation. This allows a predefined fault detection direction to be associated with each directional protection function unit.
■ The association of logic inputs and standard functions simplifies this implementation and cabling is therefore identical on all Sepams on all substations.

For each substation

■ The protection 67 unit 1 threshold is set for fault detection on the busbars, and the unit 2 threshold for a fault on the line.
The settings can be identical (thresholds, time delay, angle).
■ The delayed thresholds on both units are used to trip the circuit breaker associated with the Sepam relay.
■ The blocking send 2 (O103) outputs on the substation Sepams are connected to the blocking reception 1 inputs (I103) on the opposite Sepam.

Between 2 substations

The blocking send 1 (O102) output on the substation Line feeder Sepam is connected to the input (I104) on its Sepam which corresponds to the other end of the line in the other substation.

Remarks

■ In the event of a fault in the substation, a logic discrimination order can be hard-wired on the blocking inputs (I103) of both Sepams in the ring so as to block the directional 67 and 67N function units oriented towards the busbars.
In this case 2 separate contacts must be used to decouple the simultaneous blocking send command from the protection function in the substation to both Ring feeder Sepams.
■ Particular care must be given to managing the polarity of commands between the various substations in the ring.

Logic discrimination
Example of setting:
closed ring network

Example of setting with IEC 61850 GOOSE messages

Case of a ring consisting of 2 substations containing 2 S62 Ring feeder Sepams and a User T60 transformer Sepam. This example is given with the directional phase protection function (ANSI 67) but the same reasoning applies for the directional earth fault protection function (ANSI 67N).

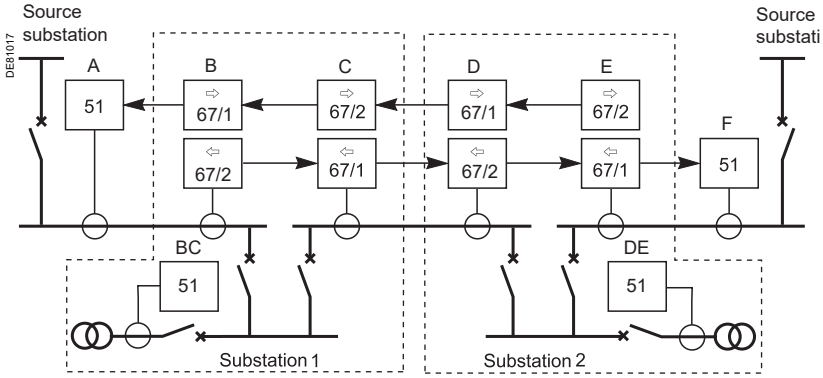

⇨, ⇦ : *detected fault direction according to the directional protections*

: *direction of blocking signal orders*

Example of associated Ethernet network

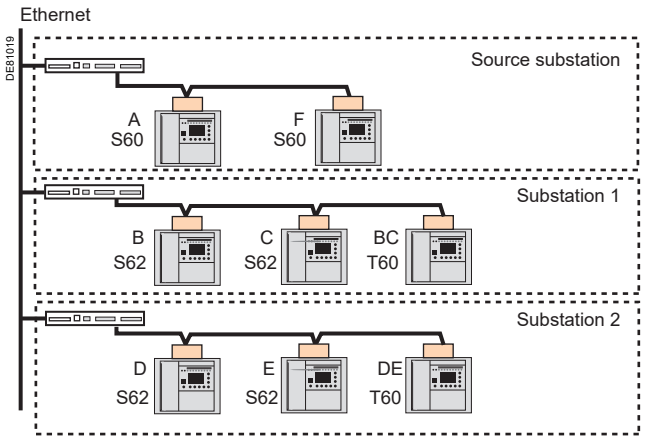

Protection settings

The protection settings are the same as for hard-wired cabling:
To simplify on-site cabling the following rules must be observed.

General rules

■ The cabling for CTs and VTs is identical on all cubicles and conforms to the connection diagrams in the Sepam documentation. This allows a predefined fault detection direction to be associated with each directional protection function unit.
■ The association of GOOSE inputs and standard functions simplifies the implementation of GOOSE messages.

For each substation

■ The protection 67 unit 1 threshold is set for fault detection on the busbars, and the unit 2 protection threshold for a fault on the line.
The settings can be identical (thresholds, time delay, angle).
■ The delayed thresholds on both units are used to trip the circuit breaker associated with the Sepam relay.

Logic discrimination
Example of setting: closed ring network

Setting the GOOSE data parameters

Publishing GOOSE messages

■ Each S62 Ring feeder Sepam (B, C, D, E) publishes a GOOSE message consisting of several data items, especially those concerning blocking inputs and network connection tests:

□ LDO.PTRC1.BlkInd1 created by the BSIG1 function (67, 67N unit 1) when there is a fault on the busbars

□ LDO.PTRC1.BlkInd2 created by the BSIG2 function (67, 67N unit 2) when there is a fault on the line

□ LDO.GSE_GGIO1.Test1 which can be activated using the SFT2841 software connected to the Sepam in order to manually test the connection and parameter settings of the Sepam relays subscribed to GOOSE messages for this Sepam.

In this example,

■ the T60 Ring feeder (A and F) Sepams on the source substation do not publish GOOSE messages

■ User T60 Sepam publish a blocking input GOOSE message consisting of the following 2 data items:

□ LDO.PTRC1.BlkInd1 created by the BSIG1 function (50/51, 50N/51N)

□ LDO.GSE_GGIO1.Test1 to test the Ethernet connection

Subscribing to GOOSE messages

Each S62 Ring feeder Sepam subscribes to GOOSE messages containing blocking data items from the following Sepam relays:

■ Sepam (T60) User

■ Sepam (S62) Ring feeder from its substation

■ Sepam (S62) Ring feeder from the substation at the other end of the line.

GOOSE data between Sepam relays in the closed ring

The table below contains all the information needed to create the GOOSE messages exchanged between all Sepam relays in the closed ring.

In this example, LED 5 on the Sepam front face which is, depending on where it comes from, assigned to G411, G412 or G413 in the SFT2841 matrix, allows the user to check visually that the GOOSE message has been receiving during a manual test.

Preparing GOOSE messages using the SFT850 software								
	Sepam A (S60)	**Sepam B (S62)**	**Sepam BC (T60)**	**Sepam C (S62)**	**Sepam D (S62)**	**Sepam DE (T60)**	**Sepam E (S62)**	**Sepam F (S60)**
GOOSE publication		BlkInd1(B)	BlkInd1(BC)	BlkInd1(C)	BlkInd1(D)	BlkInd1(DE)	BlkInd1(E)	
		BlkInd2(B)		BlkInd2(C)	BlkInd2(D)		BlkInd2(E)	
		Test1(B)	Test1(BC)	Test1(C)	Test1(D)	Test1(DE)	Test1(E)	
GOOSE subscription	BlkInd1(B)	BlkInd1(BC)		BlkInd1(BC)	BlkInd1(DE)		BlkInd1(DE)	BlkInd1(E)
		BlkInd2(C)		BlkInd2(B)	BlkInd1(C)		BlkInd2(D)	
				BlkInd1(D)	BlkInd2(E)			
		Test1(BC)		Test1(BC)	Test1(DE)		Test1(DE)	
	Test1(B)			Test1(B)	Test1(C)			
		Test1(C)		Test1(D)	Test1(E)		Test1(D)	Test1(E)
Association of GOOSE data items with GOOSE inputs (Gxxx) using the SFT850 software								
G401	BlkInd1(B)	BlkInd1(BC)		BlkInd1(BC)	BlkInd1(DE)		BlkInd1(DE)	
		BlkInd2(C)		BlkInd2(B)	BlkInd2(E)		BlkInd2(D)	
G402				BlkInd1(D)	BlkInd1(C)			
G411		Test1(BC)		Test1(BC)	Test1(DE)		Test1(DE)	
G412		Test1(C)		Test1(B)	Test1(E)		Test1(D)	
G413	Test1(B)			Test1(D)	Test1(C)			Test1(E)
Associating GOOSE inputs with Sepam logic functions using the SFT2841 software								
G401	BSIG1	BSIG1		BSIG1	BSIG1		BSIG1	BSIG1
G402		BSIG2		BSIG2	BSIG2		BSIG2	
G411		LED 5		LED 5	LED 5		LED 5	
G412		LED 5		LED 5	LED 5		LED 5	
G413	LED 5			LED 5	LED 5			LED 5

BlkInd1 (C) = LDO.PTRC1.BlkInd1.stVal issued by the Sepam (C)
BlkInd2 (C) = LDO.PTRC1.BlkInd2.stVal issued by the Sepam (C)
Test1 (C) = LDO.GSE_GGIO1.Test1.stVal issued by the Sepam (C)

Load shedding

Operation

Motor load shedding is done to reduce the load on the electrical network so as to keep the voltage within an acceptable range.
Load shedding may be triggered:
■ by an order from outside Sepam in the presence of a logic input assigned for the reception of load shedding orders. Orders may be delayed
■ by a voltage dip detected by the delayed output of Sepam 27D protection unit 1 (typical setting 40% Un).
Load shedding triggers:
■ tripping by the switchgear control function
■ inhibition of closing as long as the load shedding order is maintained.
The load shedding order is maintained as long as one of the following three conditions is present:
■ external order via logic input (Ix or Gx)
■ positive sequence voltage less than load shedding voltage detected by 27D unit 1 threshold
■ insufficient positive sequence voltage for a restart order to be given and detected by the delayed 27D unit 2 threshold. The time delay for the detection of correct voltage recovery must be shorter than the load shedding delay (27D unit 1) in order for the load shedding order to be maintained correctly. This unit is also used by the restart function.
The function may be validated by the switchgear closed and not racked out conditions.

Block diagram

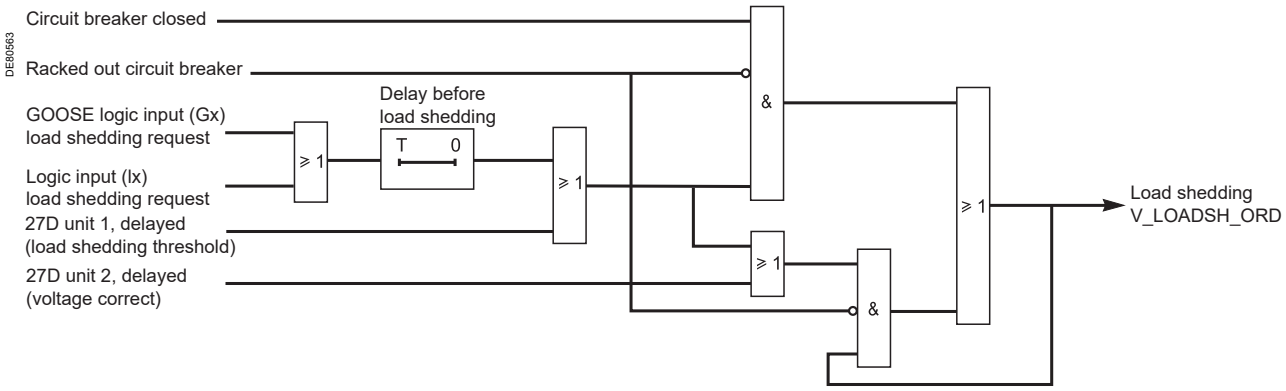

Characteristics

Settings			
Activity			
Setting range	On / Off		
Delay before load shedding			
Setting range	0 to 300 s		
Accuracy (1)	±2 % or from -10 ms to +25 ms		
Resolution	10 ms or 1 digit		
Outputs			
Designation	**Syntax**	**Equations**	**Matrix**
Load shedding order	V_LOADSH_ORD		■

(1) *Under reference conditions (IEC 60255-6).*

Restart

Operation

With this function, motors can be automatically restarted after a shutdown triggered by a voltage dip (load shedding).
The restart function is to be associated with the load shedding function It allows staggered restarting of process motors, as long as the voltage dip that caused load shedding was brief.
When tripping occurs due to a dip in the network supply voltage detected by 27D protection unit 1, two situations are possible:
■ the voltage dip lasts for a period longer than the maximum voltage dip duration: tripping is final. External action is required for restart.
■ the voltage dip lasts for a period shorter than the maximum dip duration: a restart order is given. Delayed restart allows motor restart orders to be staggered to avoid network overload.
The enabling of restart is detected after the delayed output of protection 27D unit 2 drops out. This threshold allows the return of voltage to be detected independently with respect to the load shedding threshold. The typical setting is 50 % Un.
The restart order is given by the switchgear control function.

Block diagram

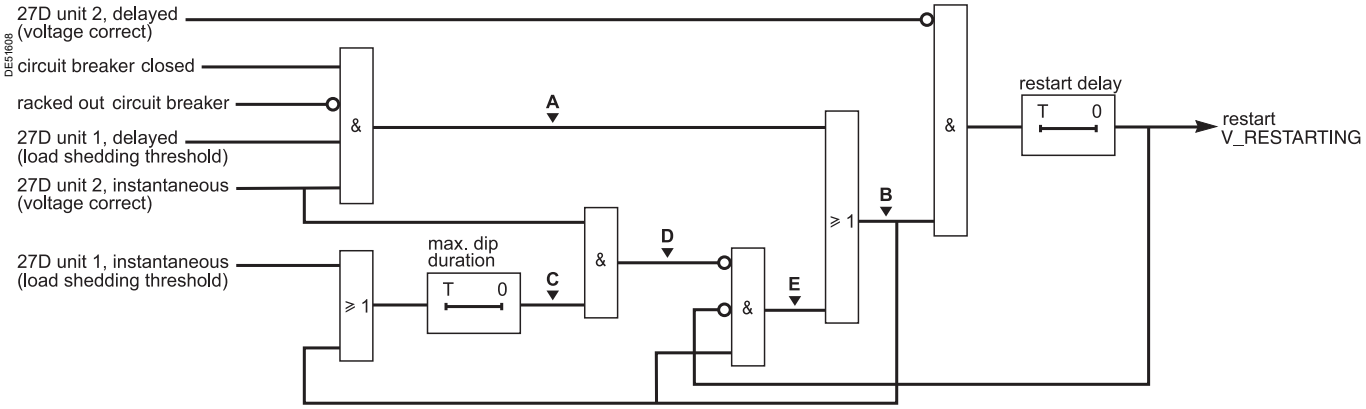

Characteristics

Settings	
Activity	
Setting range	On / Off
Maximum voltage dip duration	
Setting range	0 to 300 s
Accuracy (1)	±2 % or from -10 ms to +25 ms
Resolution	10 ms or 1 digit
Restart delay	
Setting range	0 to 300 s
Accuracy (1)	±2 % or from -10 ms to +25 ms
Resolution	10 ms or 1 digit

(1) *Under reference conditions (IEC 60255-6).*

Example 1: Voltage dip with restart order

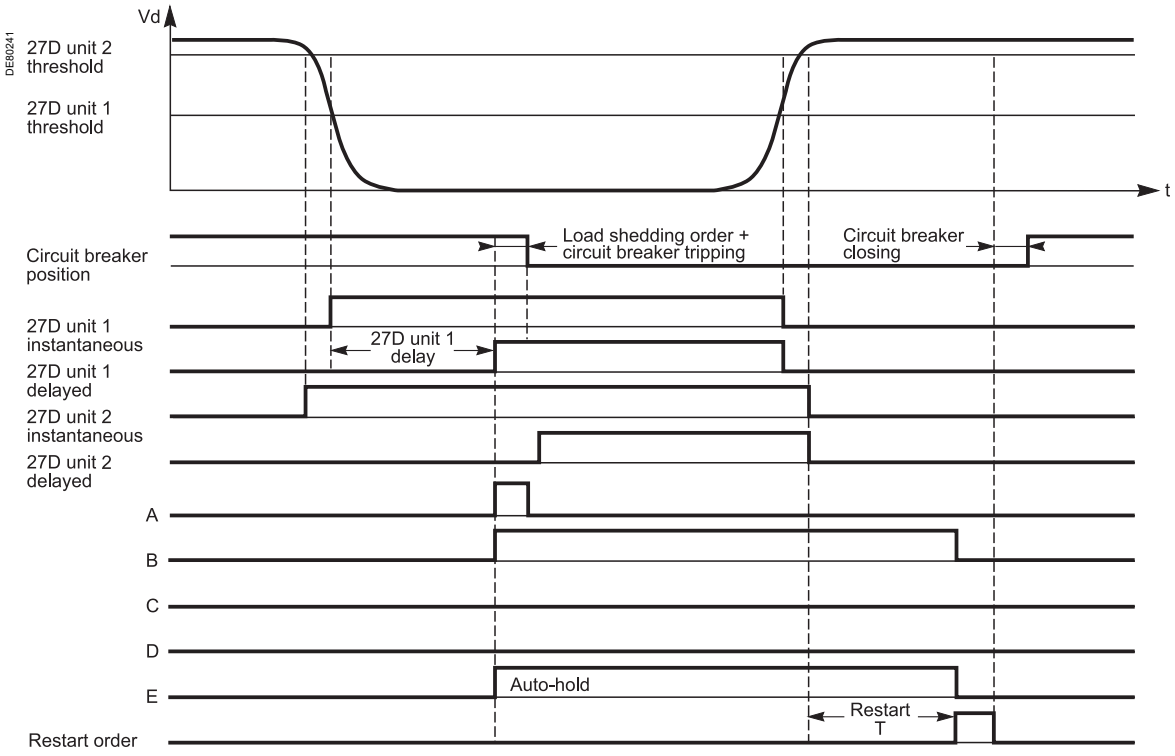

Example 2: Voltage dip without restart order

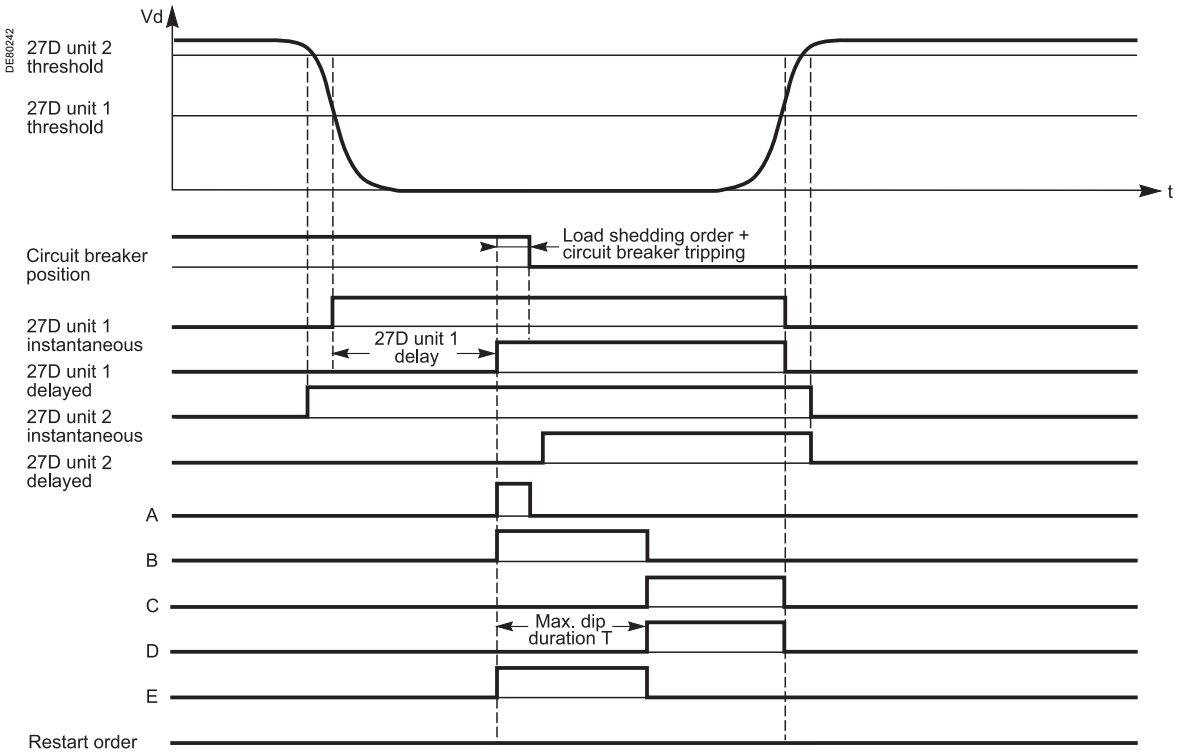

Generator shutdown and tripping

Operation

This function controls shutdown of the driving machine, tripping of the breaking device and interruption of the generator excitation supply in case of:
- detection of an internal generator fault
- receipt of a genset shutdown order on a logic input or via the communication link.

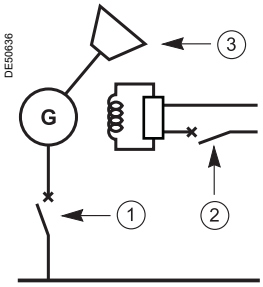

Generator shutdown and tripping involve:
① tripping of the circuit breaker connecting the machine to the network
② tripping of the excitation circuit breaker
③ shutdown of the prime mover.

The combination of these three orders determines four types of shutdown and tripping orders:
- total shutdown (simultaneous tripping)
- generator tripping
- generator separation
- sequential tripping.

Total shutdown

This type of control function gives the following orders at the same time:
- a trip order to the generator coupling circuit breaker
- a trip order to the excitation circuit breaker
- a shutdown order to the prime mover.

This mode is reserved for internal faults in generators and transformers of generator-transformer units.

Generator tripping

This type of control function gives the following orders:
- a trip order to the generator coupling circuit breaker
- a trip order to the excitation circuit breaker.

The prime mover is not shut down.
This mode is reserved for power network faults and allows the generator to be quickly reconnected after the fault is cleared.

Generator separation

This type of control function gives the following order:
- a trip order to the generator coupling circuit breaker.

The machine remains excited and the prime mover is not shut down.
This mode is used to the isolate the machine from a network which no longer meets the coupling conditions (voltage, frequency, loss of power network).
The generator may continue to supply loads locally.

Sequential tripping

This type of control function gives the following orders on after the other:
- a trip order to the generator coupling circuit breaker
- a delayed trip order to the excitation circuit breaker
- a delayed shutdown order to the prime mover.

This mode is reserved for certain machines.

Sepam enables these operating modes by combining:
- switchgear control for tripping of the generator coupling circuit breaker
- de-excitation function for tripping of the excitation circuit breaker
- genset shutdown function to order the shutdown of the prime mover.

Function output delays are used for sequential tripping.

Typical parameter setting for industrial network generators

Protection functions	Circuit breaker tripping	Genset shutdown	De-excitation
12	■		
21B	■		
27	■		
32Q	■	■	■
37P	■		
40	■	■	■
46	■		
47	■		
49RMS	■		
50/51	■		
50N/51N 50G/51G	■	■	■
50V/51V	■		
59	■		
59N	■	■	■
64REF	■	■	■
67	■	■	■
67N/NC	■	■	■
81H	■		
81L	■		
81R	■		

Generator shutdown and tripping
Genset shutdown

Operation

This function, available in generator applications, is used to shut down the genset:
- mechanical shutdown by shutting down the prime mover
- electrical shutdown by tripping the generator.

Genset shutdown may be initiated in the following ways:
- by a external shutdown order
  - remote control order if enabled
  - logic input if set up
- by logic equation to take into account all specific generator installation characteristics
- by delayed protection functions.

The protection functions concerned are those that detect internal faults in generators or transformers of generator-transformer units. They are divided into 2 groups: protection functions that contribute to shutdown regardless of the circuit breaker position and those whose contribution is dependent on the circuit breaker position:
- protection functions unrelated to circuit breaker position 12, 21B, 32Q, 40, 51V, 64REF, 67, 67N, 81L
- protection functions dependent on circuit breaker position 50/51, 50N/51N, 59N. The delayed, unlatched outputs of these protection units activate shutdown, only if the circuit breaker is open.

Participation in the function is to be set individually in the protection setting tabs of the SFT2841 software for each protection unit that can take part in genset shutdown.
At the same time, the function gives a tripping order via switchgear control to disconnect the generator from the power network. It must be associated with a logic output in the matrix to initiate genset shutdown.

Block diagram

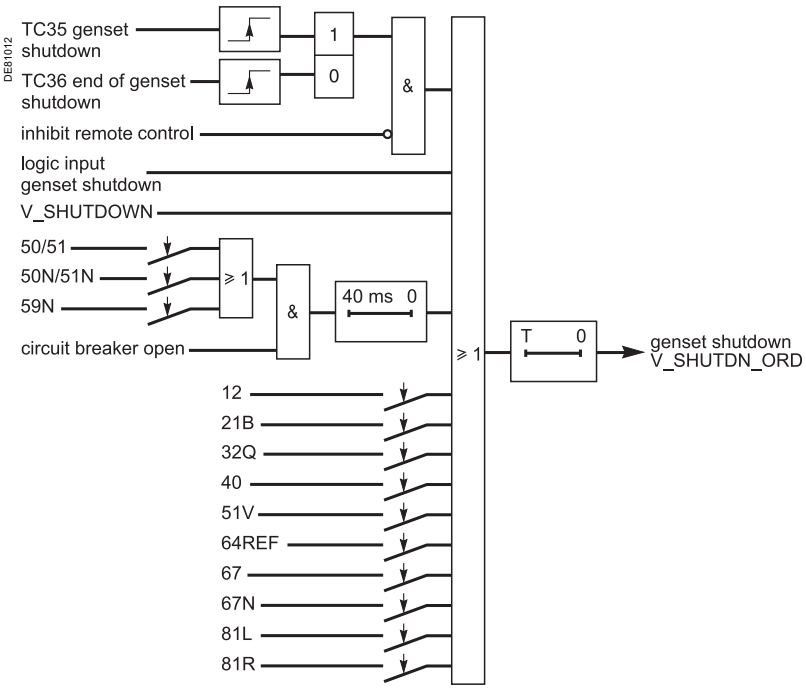

Characteristics

Settings			
Activity			
Setting range	On / Off		
Selection of protection functions activating genset shutdown			
Setting range per protection unit	Enabled / disabled		
Genset shutdown time delay			
Setting range	0 to 300 s		
Accuracy (1)	±2 % or from -10 ms to +25 ms		
Resolution	10 ms or 1 digit		
Inputs			
Designation	**Syntax**	**Equations**	
Genset shutdown	V_SHUTDOWN	■	
Outputs			
Designation	**Syntax**	**Equations**	**Matrix**
Genset shutdown	V_SHUTDN_ORD		■

(1) *Under reference conditions (IEC 60255-6).*

TS/TC equivalence for each protocol

Modbus	DNP3	IEC 60870-5-103	IEC 61850
TC	**Binary Output**	**ASDU, FUN, INF**	**LN.DO.DA**
TC35	BO15	20, 21, 102 (ON)	-
TC36	BO16	20, 21, 102 (OFF)	-

Generator shutdown and tripping
De-excitation

Operation

This function, available in generator applications, is used to quickly cut off the power supply to an internal fault when the generator is disconnected from the network:
- de-excitation of the generator
- electrical shutdown by tripping.

De-excitation may be initiated in the following ways:
- by an order
- remote control order if enabled
- logic input if set up
- by logic equation or to take into account all specific generator installation characteristics
- by delayed protection functions.

The protection functions concerned are those that detect internal faults in generators or transformers of generator-transformer units. They are divided into 2 groups: protection functions that contribute to de-excitation regardless of the circuit breaker position and those whose contribution is dependent on the circuit breaker position:
- protection functions unrelated to circuit breaker position 12, 21B, 32Q, 40, 51V, 59, 64REF, 67, 67N, 81L
- protection functions dependent on circuit breaker position 50/51, 50N/51N, 59N. The delayed, unlatched outputs of these protection units trigger de-excitation only if the circuit breaker is open.

Participation in the function is to be set individually in the protection function setting tabs of the SFT2841 software for each protection unit that can take part in de-excitation.
At the same time, the function gives a tripping order via switchgear control to disconnect the generator from the power network. It must be associated with a logic output in the control matrix to initiate the de-excitation order.

Block diagram

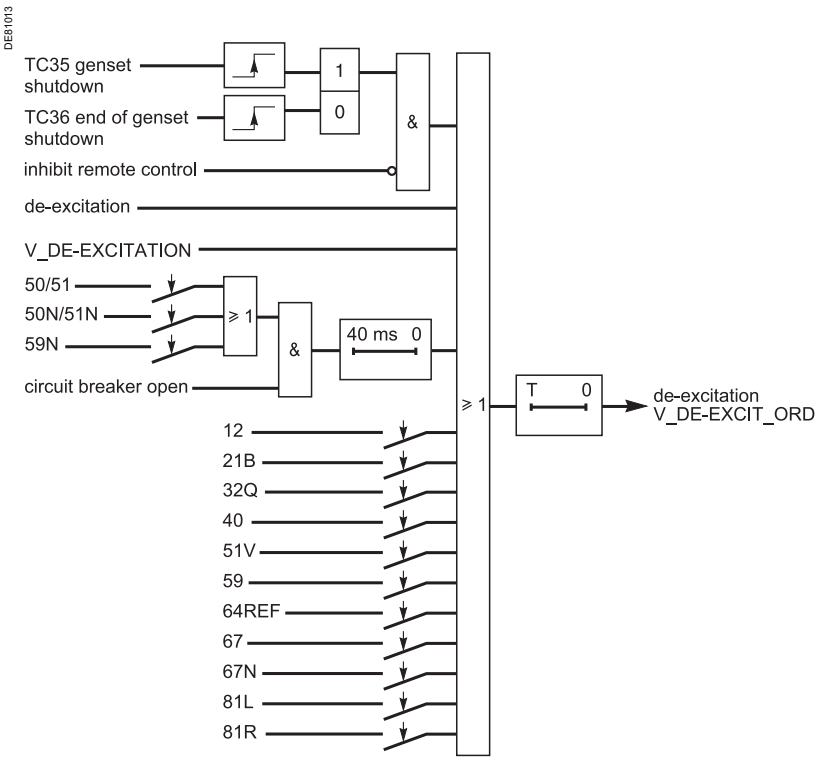

Characteristics

Settings			
Activity			
Setting range	On / Off		
Selection of protection functions activating de-excitation			
Setting range per protection unit	Enabled / disabled		
De-excitation time delay			
Setting range	0 to 300 s		
Accuracy (1)	±2 % or from -10 ms to +25 ms		
Resolution	10 ms or 1 digit		
Inputs			
Designation	**Syntax**	**Equations**	
De-excitation	V_DE-EXCITATION	■	
Outputs			
Designation	**Syntax**	**Equations**	**Matrix**
De-excitation	V_DE-EXCIT_ORD		■

(1) *Under reference conditions (IEC 60255-6).*

TS/TC equivalence for each protocol

Modbus	DNP3	IEC 60870-5-103	IEC 61850
TC	**Binary Output**	**ASDU, FUN, INF**	**LN.DO.DA**
TC35	BO15	20, 21, 102 (ON)	-
TC36	BO16	20, 21, 102 (OFF)	-

Generator shutdown and tripping
Example

Installation description

The electrical installation consists of busbars to which the following are connected:
- an incomer supplied by a 10 MVA transformer
- a 3.15 MVA power generator

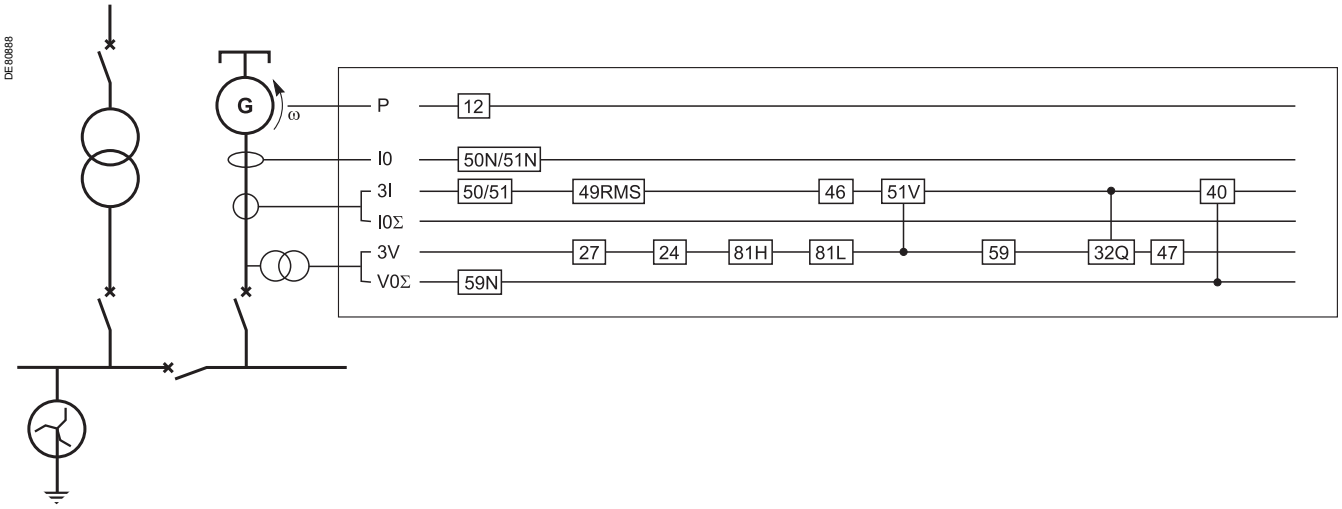

In normal operation, the generator and transformer are coupled to the busbars. The generator provides backup power to the installation in the absence of the transformer power supply. The installation is earthed by a neutral point coil connected to the busbars. When the generator is not coupled to the network, its neutral is isolated. When faults occur, the generator is over-excited for 3 seconds. Its fault current is equal to 3 times its rated current. After the 3 seconds have elapsed, the fault current drops to 0.5 times the rated current.

The generator is protected:
- against network electrical short-circuits by a phase overcurrent protection function 50/51 and a backup protection function 50V/51V
- against earth faults by an earth fault protection function 50N/51N when the generator is coupled to the busbars and by a neutral voltage displacement protection function when it is not coupled
- against overloads by a thermal overload protection function 49RMS
- against unbalance by a negative sequence / unbalance protection function 46
- against frequency variations by underfrequency and overfrequency protection functions 81L and 81H
- against voltage variations by undervoltage and overvoltage protection functions 27 and 59
- against field loss by a protection function 40.

Setting of genset shutdown and de-excitation

The participation of these protection functions in circuit breaker tripping, genset shutdown and de-excitation depends on the type of faults detected:
- circuit breaker tripping against network faults:
50/51, 50V/51V, 50N/51N, 49RMS, 46, 81L, 81H, 27, 59
- genset shutdown for prime mover faults and internal faults:
50/51, 59N, 40
- de-excitation for internal faults: 50/51, 59N, 40.

Shutdown is total and not sequential. The genset shutdown and de-excitation time delays are zero.

Automatic transfer

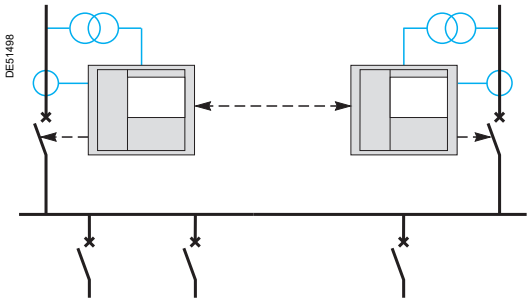

Automatic "one out of two" transfer.

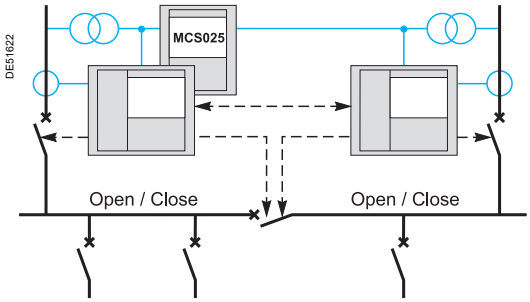

Automatic "two out of three" transfer with synchro-check managed by Easergy Sepam series 60.

Description

The automatic transfer function is used to transfer busbar supply from one source to another.
The function reduces busbar supply interruptions, thereby increasing the service continuity of the network supplied by the busbars.

Automatic transfer performs:
- automatic transfer with interruption if there is a loss of voltage or a fault upstream
- manual transfer and return to normal operation without interruption, with or without synchro-check
- control of the coupling circuit breaker (optional)
- selection of the normal operating mode
- the necessary logic to ensure that at the end of the sequence, only 1 circuit breaker out of 2 or 2 out of 3 are closed.

Automatic "one out of two" or "two out of three" transfer

The operation and implementation of the automatic transfer function depend on the type of substation:
- automatic "one out of two" transfer is suitable for dual-incomer substations without coupling
- automatic "two out of three" transfer is suitable for dual-incomer substations with coupling.

These two applications are described separately to make them easier to understand.

The automatic transfer function is symmetrical:
- hardware symmetry: dual-incomer substations, with 2 incoming circuit breakers, and each incomer is protected by an Easergy Sepam series 60 unit
- functional symmetry: automatic transfer is distributed between the two Easergy Sepam series 60 units protecting the two incomers.

Each of the functions is therefore described from the viewpoint of one of the two incomers, the other incomer being referred to as the "opposite side" incomer.

Automatic transfer

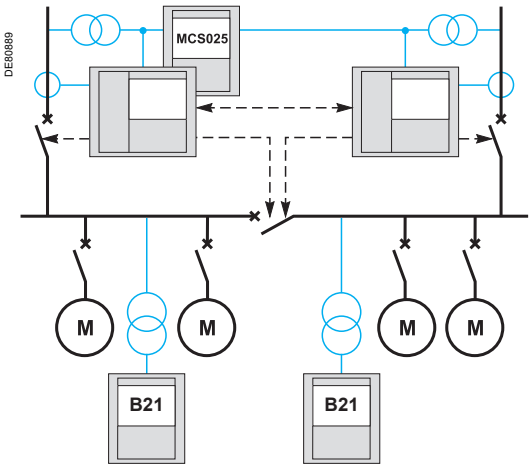

Automatic "two out of three" transfer with synchro-check managed by Sepam.

Equipment used

Sepam protection relay

Each incomer is protected by an Easergy Sepam series 60 unit.
At least two MES120 modules need to be added to each Sepam.
The synchro-check function (ANSI 25) is performed by an optional MCS025 module connected to one of the 2 Sepam units.

For busbars with motors, it is necessary to check the remanent voltage on the busbars during automatic transfer using a Sepam B21.

Local control of automatic transfer

Local control of automatic transfer requires the following components:
■ 1 "NO circuit breaker" selector (ANSI 10), 2 or 3-position selector which designates the circuit breaker that remains open at the end of voluntary transfer without interruption
■ 1 optional "Manual / Auto" selector (ANSI 43)
□ in Auto mode, automatic transfer is enabled
□ in Manual mode, automatic transfer is disabled
□ when this optional selector is not included, all the automatic transfer functions are enabled.
■ 1, 2 or 3 optional "Local / Remote" selectors (one selector for the function or one selector per circuit breaker)
□ in Remote mode, automatic transfer on voltage loss is enabled and the other functions are disabled
□ in Local mode, automatic transfer on voltage loss is disabled and the other functions are enabled
□ when these optional selectors are not included, all the automatic transfer functions are enabled.
■ 2 or 3 optional pushbuttons with LEDs (one pushbutton per circuit breaker):
□ "Breaker closing" pushbutton
□ "Closing ready" LED.

Automatic "one out of two" transfer
Operation

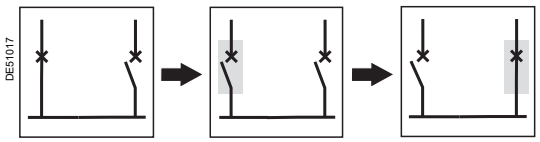

Definition

Automatic "one out of two" transfer is suitable for substations with busbars supplied by two incomers with no coupling.
Automatic transfer comprises two functions:
- automatic transfer with busbar supply interruption
- voluntary return to normal without busbar supply interruption.

The 2 functions are described separately below.

Automatic transfer with supply interruption

Description

The function is used to transfer busbar supply from one source to the other, after the detection of voltage loss or a fault upstream of the source.

Automatic source transfer takes place in two steps:
- tripping of the circuit breaker triggered by the detection of the loss of voltage or an external trip order (trip order from upstream protection units): loss of busbar supply
- closing of the opposite side circuit breaker to resupply the busbars (when motors are connected to the busbars, it is necessary to check for remanent voltage on the busbars using the ANSI 27R Remanent undervoltage function).

Compulsory transfer conditions

These conditions are always required to enable transfer:
- the incoming circuit breaker is closed
- no phase-to-phase fault detected by the incomer on the busbars or downstream
- no phase-to-earth fault detected by the incomer on the busbars or downstream
- voltage OK on the opposite incomer.

Optional transfer conditions

These conditions are required when the associated optional functions are enabled:
- the "Auto / Manual" selector is in the Auto position
- the 2 "Local / Remote" selectors are in the Remote position
- the 2 incoming circuit breakers are racked in
- no VT fault detected by the VT Supervision function (ANSI 60FL), to avoid transfer on the loss of voltage transformers
- no inhibition of transfer by V_TRANS_STOP by logic equations.

Initialization of transfer

Three events may trigger automatic transfer:
- loss of voltage detected on the incomer by the Phase undervoltage function (ANSI 27)
- or detection of a fault by the protection units upstream of the incomer, with intertripping order on the "External tripping 1" logic input
- or V_TRANS_ON_FLT, initialization of transfer by logic equations.

Automatic "one out of two" transfer
Operation

Block diagram

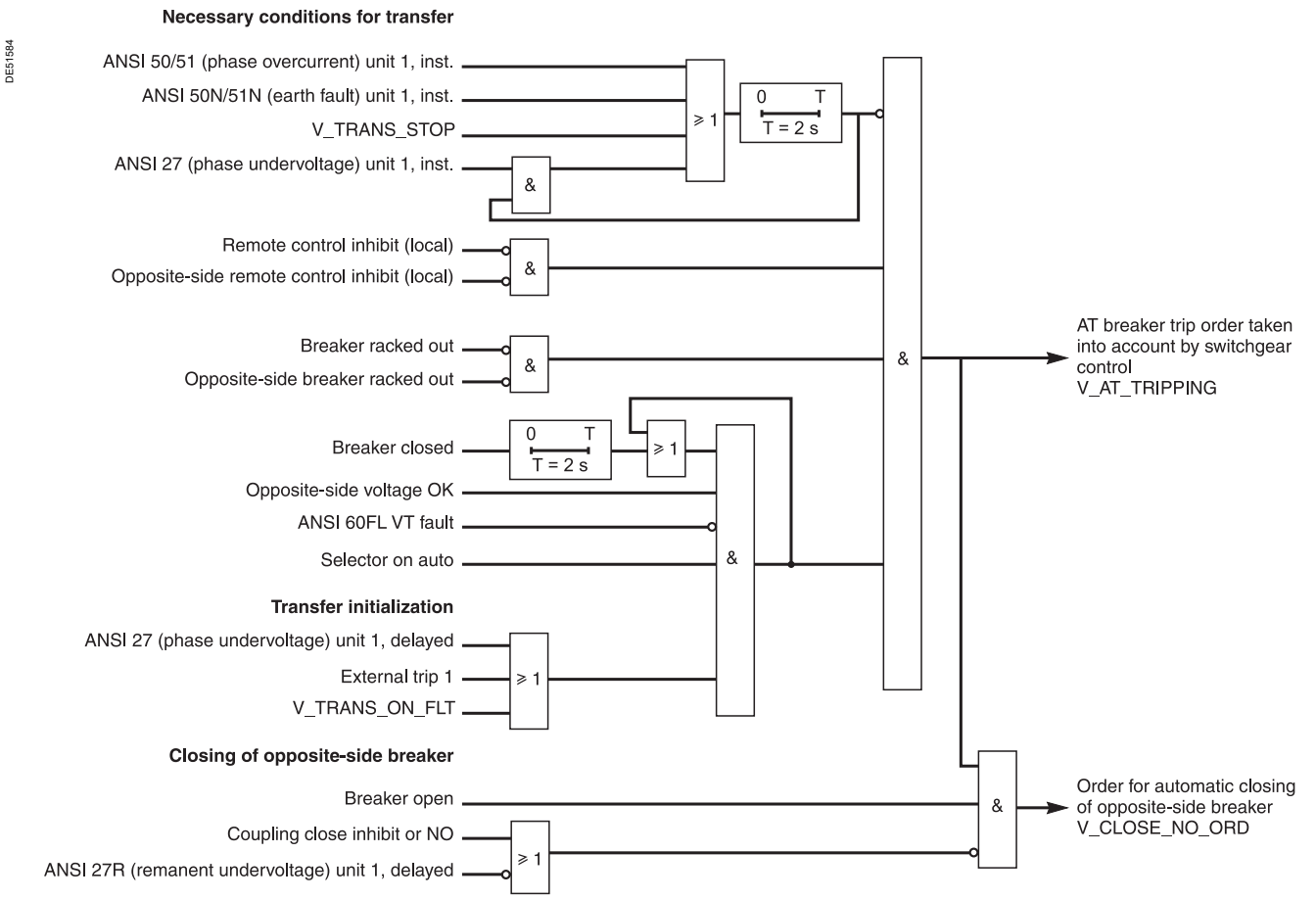

Closing of opposite side circuit breaker

The following conditions are required to order the closing of the opposite side circuit breaker:

- the circuit breaker is open
- no opposite side circuit breaker inhibit close conditions
- no remanent voltage on the busbars (checking necessary when motors are connected to the busbars).

The opposite side circuit breaker closing order is transmitted by a Sepam logic output to a logic input of the opposite side Sepam.

It is taken into account by the Switchgear control function of the opposite side Sepam.

Block diagram (Opposite side Sepam)

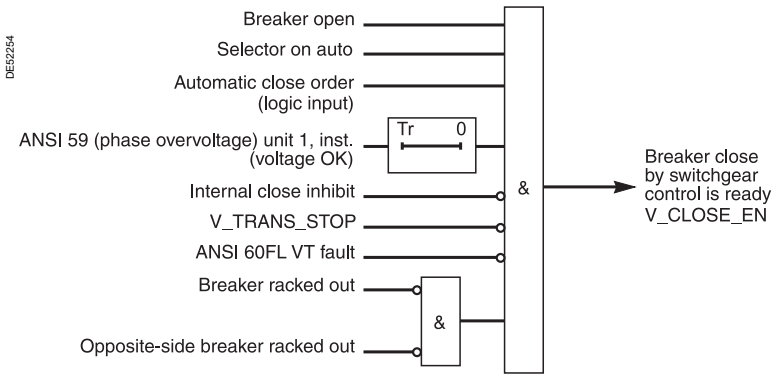

Automatic "one out of two" transfer
Operation

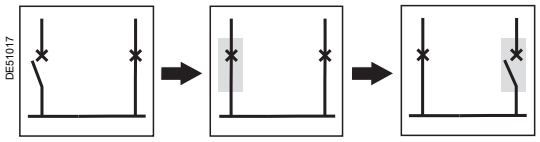

Voluntary return to normal without interruption

Description
The voluntary return to normal without interruption involves two separate control functions:

- closing of the open incoming circuit breaker, with or without synchro-check: the two incoming circuit breakers are closed
- then opening of the normally open circuit breaker, designated by the "NO circuit breaker" selector.

These two functions may also be used to transfer the busbar supply source without any interruption.

Compulsory transfer conditions
These conditions are always required to enable transfer:

- the incoming circuit breaker is open
- the voltage is OK upstream of the incoming circuit breaker.

Optional transfer conditions
These conditions are required when the associated optional functions are enabled:

- the 2 "Local / Remote" selectors are in the Local position
- the 2 incomer circuit breakers are racked in
- no VT fault detected by the VT Supervision function (ANSI 60FL), to avoid transfer on the loss of voltage transformers
- no inhibition of transfer by V_TRANS_STOP by logic equations.

Initialization of the return to normal

- voluntary incoming circuit breaker close order.

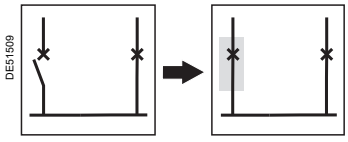

Closing of the open circuit breaker

Description
Circuit breaker closing is ensured by the Switchgear control function, with or without synchro-check.

The AT function checks that all the required conditions are met and indicates to the user that the return to normal is possible.

Block diagram

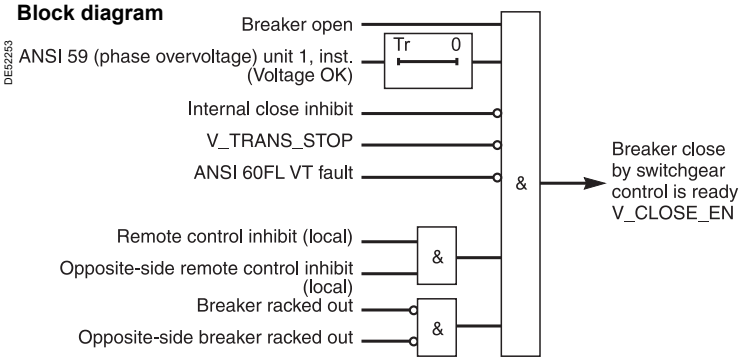

Automatic "one out of two" transfer
Operation

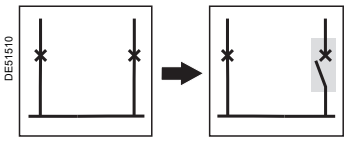

Opening of the normally open circuit breaker

Description

This function controls the opening of the circuit breaker designated as being normally open by the position of the "NO circuit breaker" selector, when the two incomer circuit breakers are closed.

It guarantees, for all the automatic control sequences that put the two sources in parallel, that at the end of the transfer, only one circuit breaker out of the two is closed.

The open order is taken into account by the Switchgear control function.

Block diagram

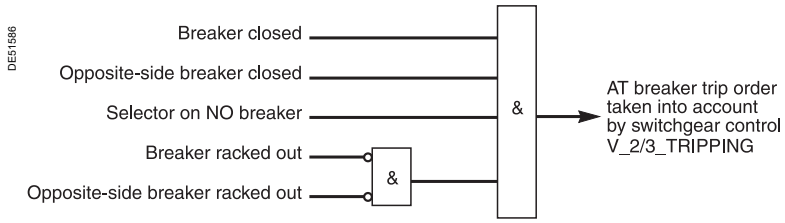

Automatic "one out of two" transfer
Implementation

Connection

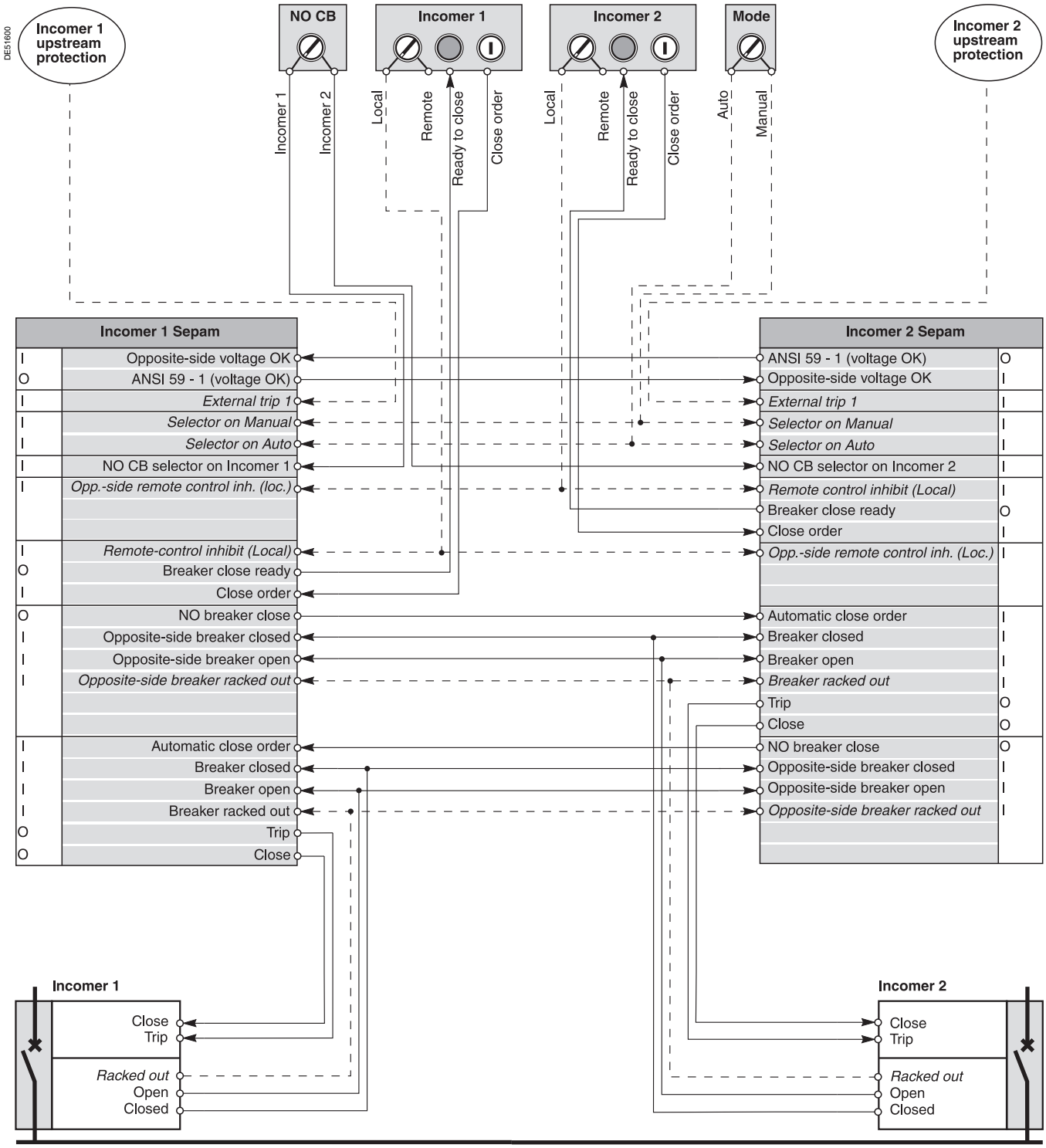

– – – – – – : *optional wiring.*

Automatic "one out of two" transfer
Implementation

PE80775

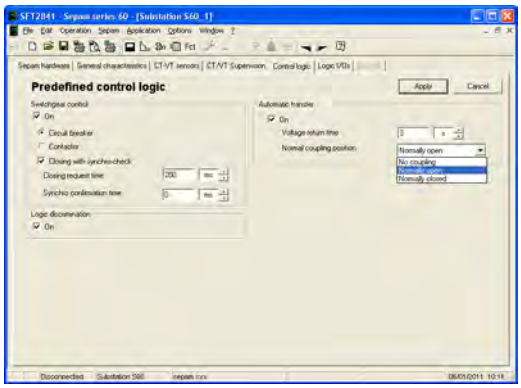

SFT2841: parameter setting of predefined control logic.

Parameter setting of predefined control functions

The Automatic transfer function is set up at the same time as the Switchgear control function in the "Control logic" tab of the SFT2841 software.

Switchgear control function

- activation of the Switchgear control function
- activation of the Synchro-check function if necessary.

Automatic transfer function

- activation of the Automatic transfer function and adjustment of associated parameters:
  - voltage return time Tr (typically 3 s)
  - normal coupling position: no coupling.

VT supervision function

The VT supervision (ANSI 60FL) is to be activated if necessary.

Protection function setting

Protection functions	Use	Setting information
Phase undervoltage (ANSI 27) Unit 1	Initialization of automatic transfer on detection of voltage loss.	Voltage set point: 60% Unp Delay: 300 ms
Phase overcurrent (ANSI 50/51) Unit 1, instantaneous output	Detection of downstream phase fault, to inhibit automatic transfer.	To be set according to discrimination study (the most sensitive set point).
Earth fault (ANSI 50N/51N) Unit 1, instantaneous output	Detection of downstream earth fault, to inhibit automatic transfer.	To be set according to discrimination study (the most sensitive set point).
Phase overvoltage (ANSI 59) Unit 1	Detection of phase voltage upstream of the circuit breaker. To be assigned to a Sepam logic output in the control matrix.	Voltage set point: 90% Unp Delay: 3 s
Optional protection functions	**Use**	**Setting information**
Remanent undervoltage (ANSI 27R) Unit 1	Detection of no remanent voltage on the busbars to which the motors are connected.	Voltage set point: 30% Unp Delay: 100 ms

Automatic "one out of two" transfer
Implementation

PE80755

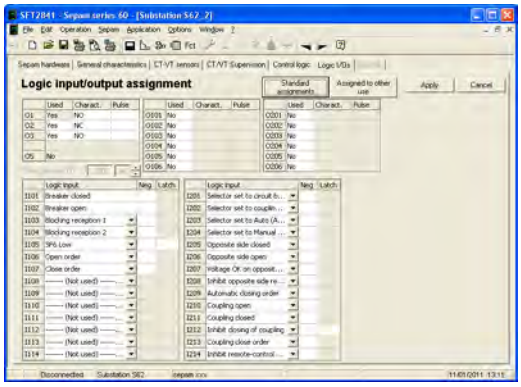

SFT2841: standard assignment of the inputs required for the AT function.

Logic input assignment

The logic inputs required for the AT function are to be assigned in the SFT2841 "Logic I/Os" screen.
The "Standard assignments" button proposes an assignment of the main inputs required for the AT function. The other inputs are to be assigned manually.

Logic output assignment in the control matrix

The assignment of the logic outputs required for the AT function takes place in 2 steps:
- declaration of the required logic outputs "Used", indicating the control mode of each output, in the SFT2841 "Logic I/Os" screen
- assignment of each predefined output associated with the AT function to a Sepam logic output in the SFT2841 "Control matrix" screen.

The predefined outputs associated with the AT function are as follows:

"Protection" button	Description	Use
59 - 1	Delayed output of the Phase overvoltage function (ANSI 59) Unit 1	Indication for the opposite side Sepam: the voltage is OK upstream of the incoming circuit breaker.
"Logic" button	**Description**	**Use**
NO circuit breaker closing	Predefined output V_CLOSE_NO_ORD of the AT function	Automatic closing order of opposite side circuit breaker.
Breaker closing ready	Predefined output V_CLOSE_EN of the AT function	LED indication: the return to normal conditions are met (neglecting the synchro-check)

Automatic "one out of two" transfer
Characteristics

Setting			
Activity			
Setting range	On / Off		
Voltage return time			
Setting range	0 to 300 s		
Accuracy (1)	±2 % or from -10 ms to +25 ms		
Resolution	10 ms or 1 digit		
Normal coupling position			
Setting range	No coupling / Normally open / Normally closed		
Inputs			
Designation	**Syntax**	**Equations**	
Transfer order on fault	V_TRANS_ON_FLT	■	
Transfer off order	V_TRANS_STOP	■	
Outputs			
Designation	**Syntax**	**Equations**	**Matrix**
Automatic transfer on	V_TRANSF_ON		■
Tripping by 2/3 or 1/2 logic	V_2/3_TRIPPING		■
Tripping by automatic transfer	V_AT_TRIPPING		■
NO circuit breaker closing	V_CLOSE_NO_ORD		■
Breaker closing ready	V_CLOSE_EN		■

(1) *Under reference conditions (IEC 60255-6).*

Automatic "two out of three" transfer
Operation

Definition

Automatic "two out of three" transfer is suitable for substations with busbars supplied by two incomers and with coupling.
Automatic transfer comprises two functions:
- automatic transfer with busbar supply interruption
- voluntary return to normal without busbar supply interruption.

The 2 functions are described separately below.

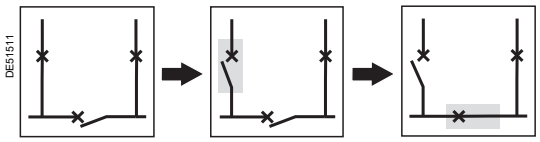

Automatic transfer with normally open coupling.

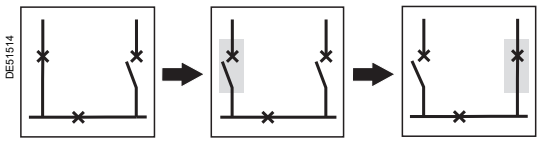

Automatic transfer with normally closed coupling.

Automatic transfer with supply interruption

Description

The function is used to transfer busbar supply from one source to the other, after the detection of voltage loss or a fault upstream of the source.

Automatic source transfer takes place in two steps:
- tripping of the circuit breaker triggered by the detection of the loss of voltage or an external trip order (trip order from upstream protection units): loss of busbar supply
- closing of the normally open circuit breaker to resupply the busbars. According to the parameter setting, the normally open circuit breaker may be one of the following:
  - the coupling circuit breaker, when coupling is normally open
  - the opposite side circuit breaker, when coupling is normally closed.

When motors are connected to the busbars, it is necessary to check for remanent voltage on the busbars using the Remanent undervoltage function (ANSI 27R).

Compulsory transfer conditions

These conditions are always required to enable transfer:
- the incoming circuit breaker is closed
- according to the coupling setup:
  - the opposite side circuit breaker is closed and the coupling circuit breaker is open, when coupling is normally open (NO coupling)
  - or the opposite side circuit breaker is open and the coupling circuit breaker is closed, when coupling is normally closed (NC coupling)
- no phase-to-phase fault detected by the incomer on the busbars or downstream
- no phase-to-earth fault detected by the incomer on the busbars or downstream
- voltage OK on the opposite incomer.

Optional transfer conditions

These conditions are required when the associated optional functions are enabled:
- the "Auto / Manual" selector is in the Auto position
- the 3 "Local / Remote" selectors are in the Remote position
- the 3 circuit breakers are racked in
- no VT fault detected by the VT Supervision function (ANSI 60FL), to avoid transfer on the loss of voltage transformers
- no inhibition of transfer by V_TRANS_STOP by logic equations.

Initialization of transfer

Three events may trigger automatic transfer:
- loss of voltage detected on the incomer by the Phase undervoltage function (ANSI 27)
- or the detection of a fault by the protection units upstream of the incomer, with intertripping order on the "External tripping 1" logic input
- or V_TRANS_ON_FLT, initialization of transfer by logic equations.

Automatic "two out of three" transfer
Operation

Block diagram

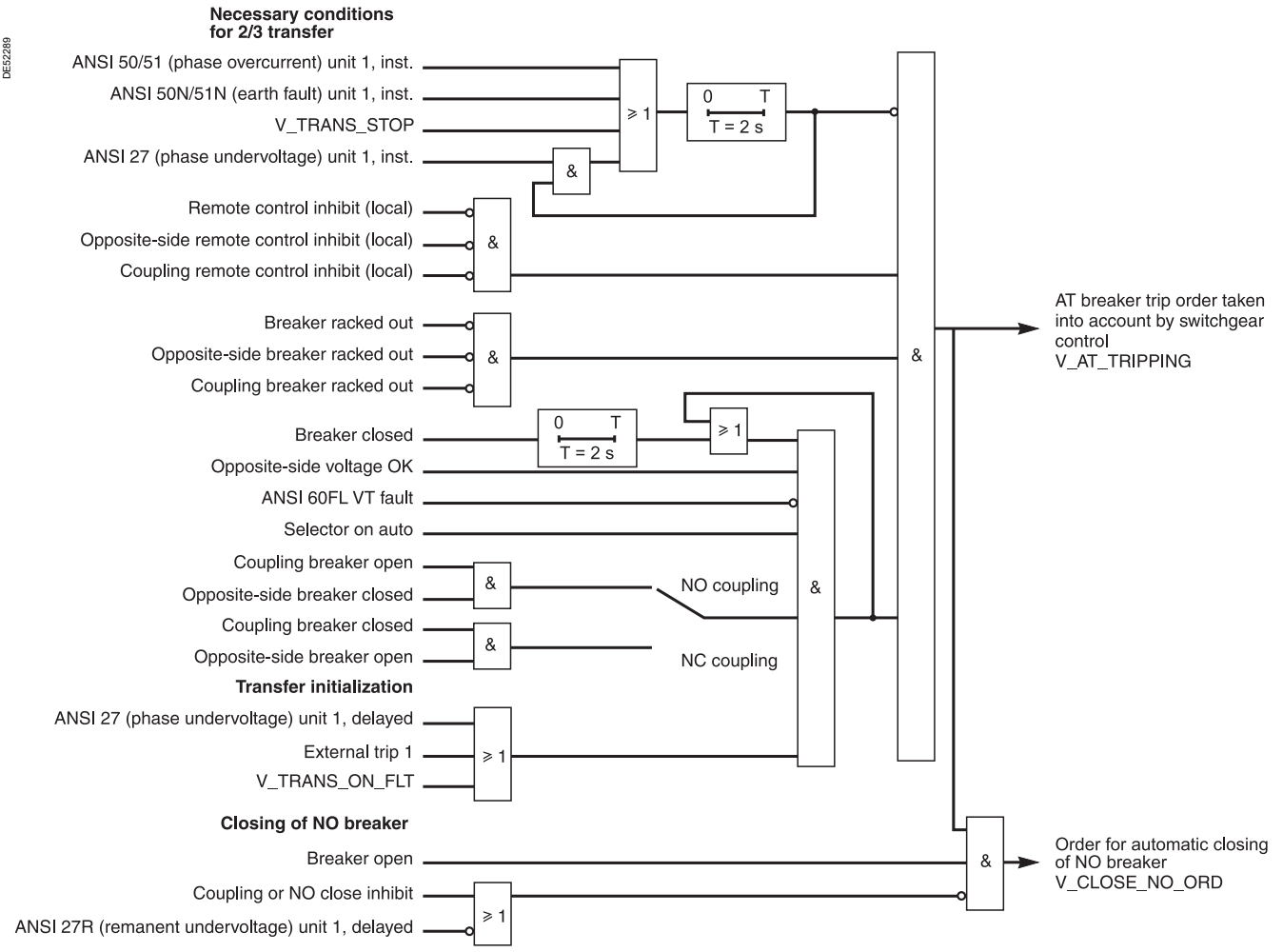

Closing of the normally open circuit breaker

The following conditions are required to order the closing of the normally open circuit breaker:

- the incoming circuit breaker is open
- no normally open circuit breaker inhibit close conditions
- no remanent voltage on the busbars (checking necessary when motors are connected to the busbars.)

If the normally open circuit breaker is the opposite side circuit breaker:
the NO circuit breaker closing order is transmitted by a Sepam logic output to a logic input of the opposite side Sepam where it is taken into account by the Switchgear control function (see block diagram below).
If the normally open circuit breaker is the coupling circuit breaker:
the NO circuit breaker closing order is transmitted by a Sepam logic output to close the circuit breaker directly, without any intermediary.

Block diagram (Opposite side Sepam)

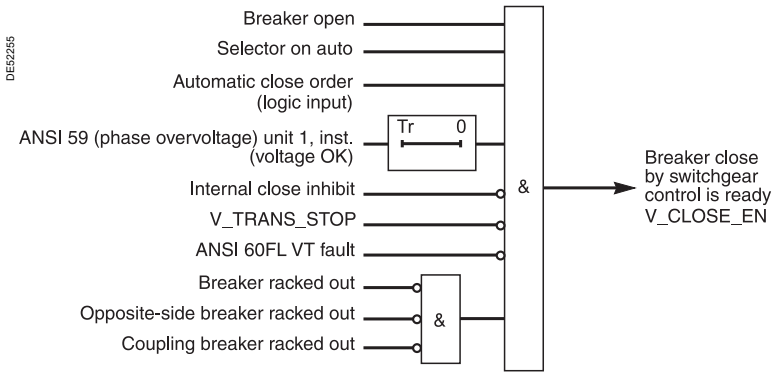

Automatic "two out of three" transfer
Operation

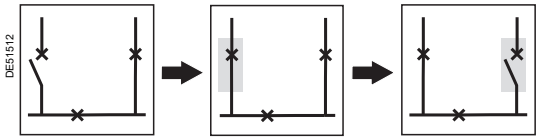

Voluntary return to normal with normally closed coupling.

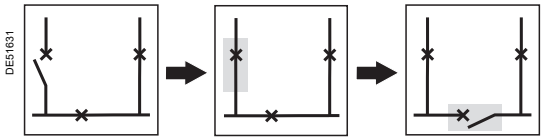

Voluntary return to normal with normally open coupling.

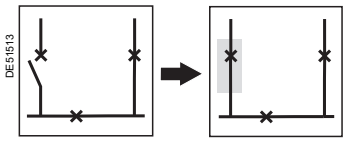

Voluntary return to normal without interruption

Description

The voluntary return to normal without interruption involves two separate control functions:

- closing of the open circuit breaker, with or without synchro-check: the 3 circuit breakers are closed
- then opening of the normally open circuit breaker, designated by the "NO circuit breaker" selector.

These two functions may also be used to transfer the busbar supply source without any interruption.

Compulsory transfer conditions

These conditions are always required to enable transfer:

- the incoming circuit breaker is open
- the opposite side circuit breaker and the coupling circuit breaker are closed
- The voltage is OK upstream of the incoming circuit breaker. This voltage is detected by function ANSI 59.

Optional transfer conditions

These conditions are required when the associated optional functions are enabled:

- the 3 "Local / Remote" selectors are in the Local position
- the 3 circuit breakers are racked in
- no VT fault detected by the VT Supervision function (ANSI 60FL), to avoid transfer on the loss of voltage transformers
- no inhibition of transfer by V_TRANS_STOP by logic equations.

Initialization of the return to normal

- voluntary incoming circuit breaker close order.

Closing of the open circuit breaker

Description

Circuit breaker closing is ensured by the Switchgear control function, with or without synchro-check.

The AT function checks that all the required conditions are met and indicates to the user that the return to normal is possible.

Block diagram

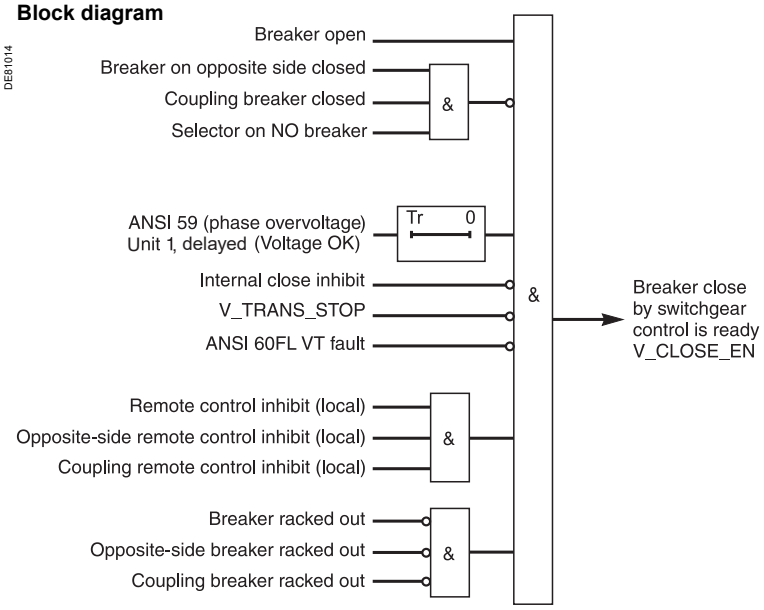

Automatic "two out of three" transfer
Operation

DE51529

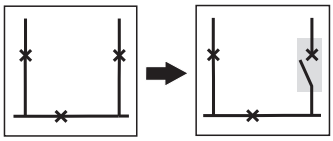

Normally closed coupling.

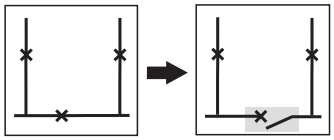

Normally open coupling.

Opening of the normally open circuit breaker

Description

This function controls the opening of the circuit breaker designated as being normally open by the position of the "NO circuit breaker" selector, when the three circuit breakers are closed.

It guarantees, for all the automatic control sequences that put the two sources in parallel, that at the end of the transfer, only two circuit breakers out of the three are closed.

The open order is taken into account by the Switchgear control function.

Block diagram

DE51589

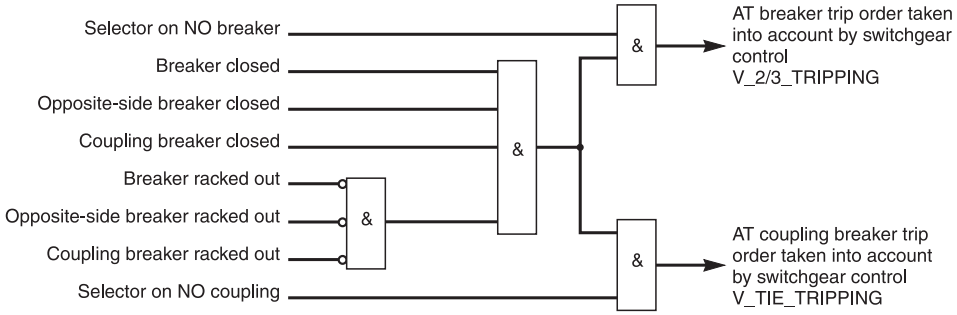

4

Automatic "two out of three" transfer
Operation

Coupling closing

Description
The voluntary closing of the coupling circuit breaker without interruption involves two separate control functions:
- closing of the coupling circuit breaker, with or without synchro-check: the 3 circuit breakers are closed
- then opening of the normally open circuit breaker, designated by the "NO circuit breaker" selector.

Compulsory transfer conditions
These conditions are always required to enable transfer:
- the opposite side voltage is OK
- the 3 following conditions are not fulfilled simultaneously:
  - the incoming circuit breaker is closed
  - the opposite side circuit breaker is closed
  - the coupling circuit breaker is the normally open circuit breaker (NO coupling).

Optional transfer conditions
These conditions are required when the associated optional functions are enabled:
- the "Auto / Manual" selector is in the Manual position
- the 3 "Local / Remote" selectors are in the Local position
- the 3 circuit breakers are racked in
- no VT fault detected by the VT Supervision function (ANSI 60FL), to avoid transfer on the loss of voltage transformers
- no inhibition of transfer by V_TRANS_STOP by logic equations.

Initialization of coupling closing
Voluntary coupling circuit breaker close order.

Block diagram

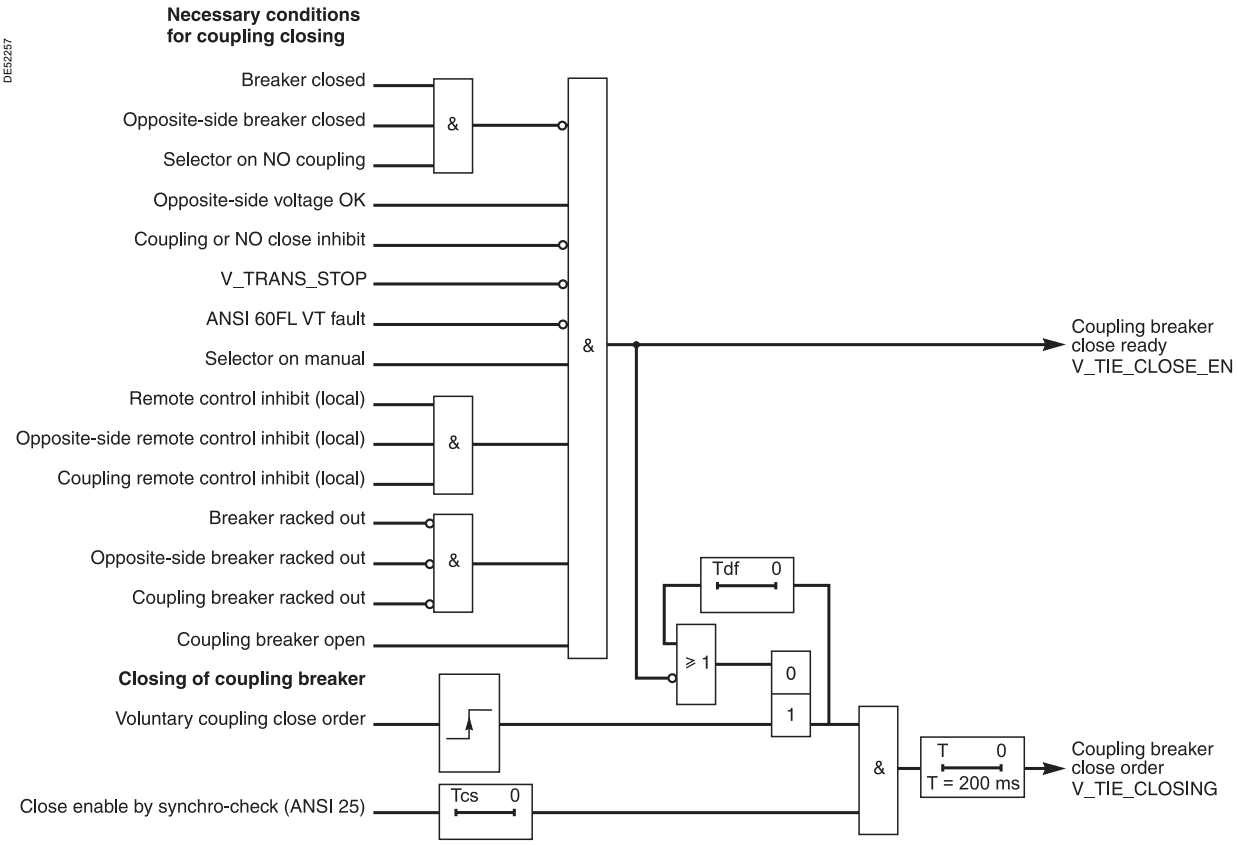

Automatic "two out of three" transfer
Implementation

Connection for normally open coupling

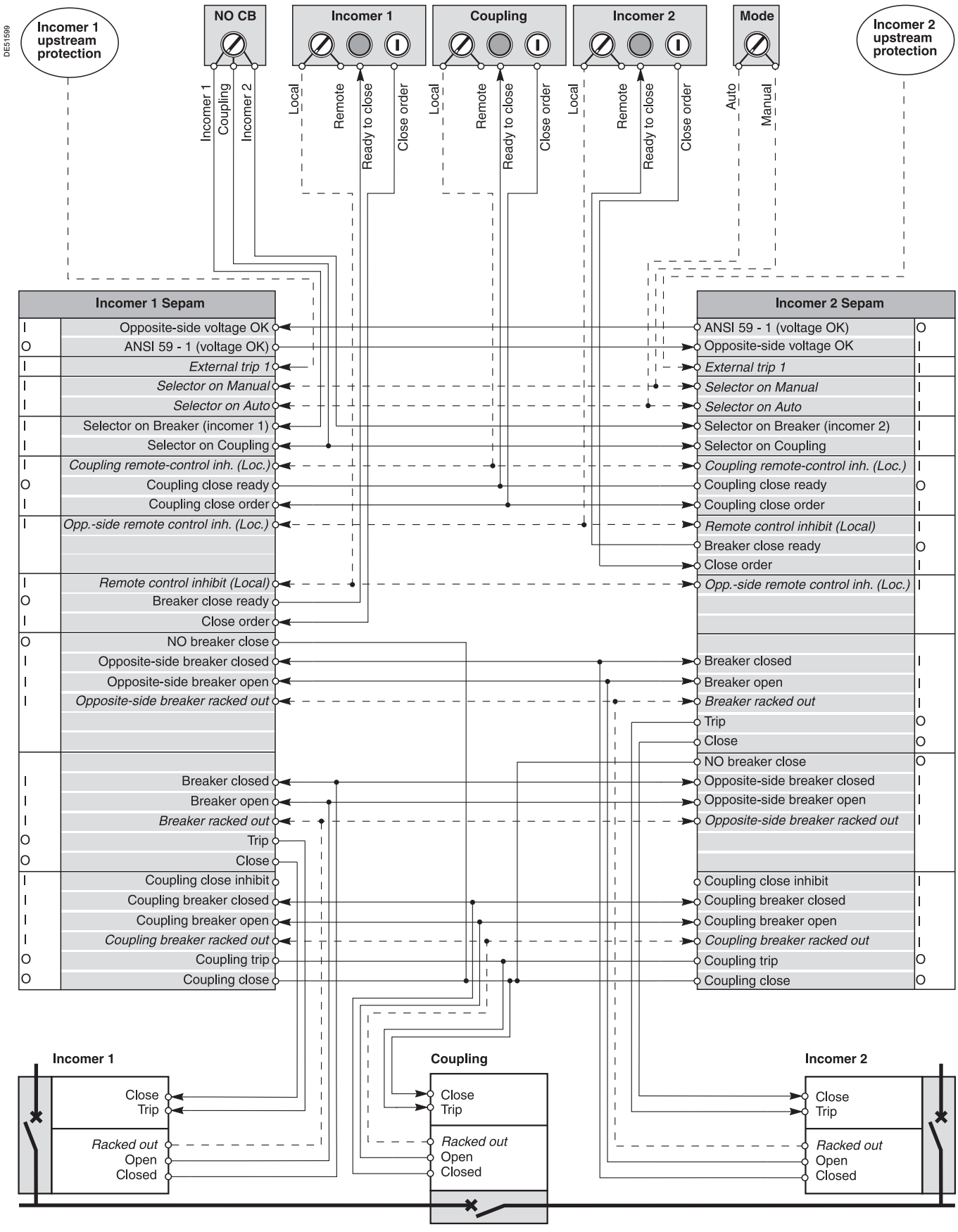

– – – – – – : *optional wiring.*

Automatic "two out of three" transfer
Implementation

Connection for normally closed coupling

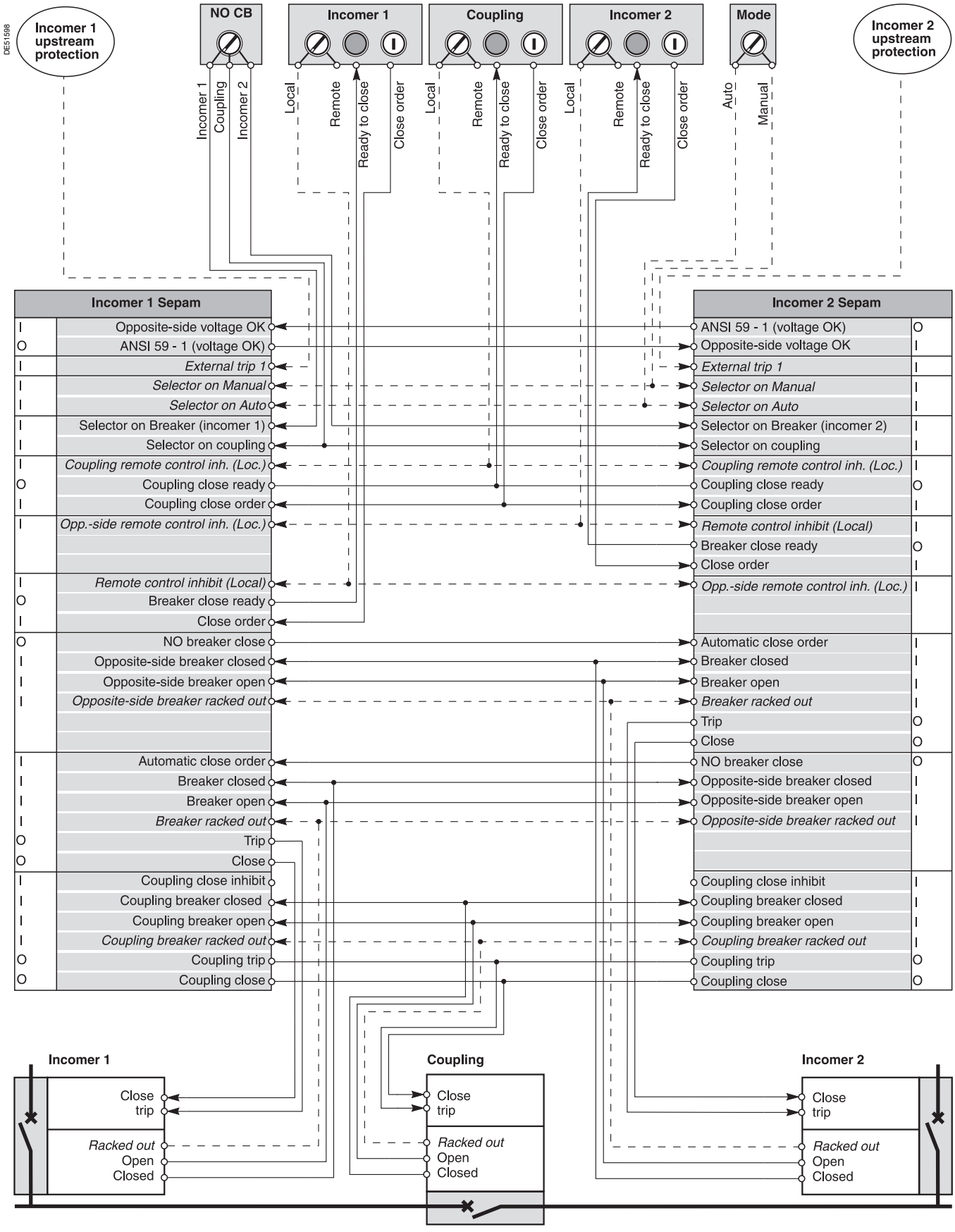

– – – – – – : *optional wiring.*

Automatic "two out of three" transfer
Implementation

PE80775

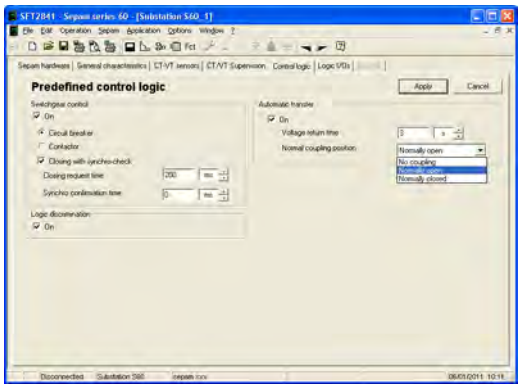

SFT2841: parameter setting of predefined control logic.

Parameter setting of predefined control functions

The Automatic transfer function is set up at the same time as the Switchgear control function in the "Control logic" tab of the SFT2841 software.

Switchgear control function

- activation of the Switchgear control function
- activation of the Synchro-check function if necessary.

Automatic transfer function

- activation of the Automatic transfer function and adjustment of associated parameters:
  - voltage return time Tr (typically 3 s)
  - normal coupling position: normally open or normally closed, according to the network operating mode.

VT supervision function

The VT supervision (ANSI 60FL) is to be activated if necessary.

Protection function setting

Protection functions	Use	Setting information
Phase undervoltage (ANSI 27) Unit 1	Initialization of automatic transfer on detection of voltage loss.	Voltage set point: 60% Unp Delay: 300 ms
Phase overcurrent (ANSI 50/51) Unit 1, instantaneous output	Detection of downstream phase fault, to inhibit automatic transfer.	To be set according to discrimination study (the most sensitive set point).
Earth fault (ANSI 50N/51N) Unit 1, instantaneous output	Detection of downstream earth fault, to inhibit automatic transfer.	To be set according to discrimination study (the most sensitive set point).
Phase overvoltage (ANSI 59) Unit 1	Detection of phase voltage upstream of the circuit breaker. To be assigned to a Sepam logic output in the control matrix.	Voltage set point: 90% Unp Delay: 3 s
Optional protection functions	**Use**	**Setting information**
Remanent undervoltage (ANSI 27R) Unit 1	Detection of no remanent voltage on the busbars to which the motors are connected.	Voltage set point: 30% Unp Delay: 100 ms

Automatic "two out of three" transfer
Implementation

PE80755

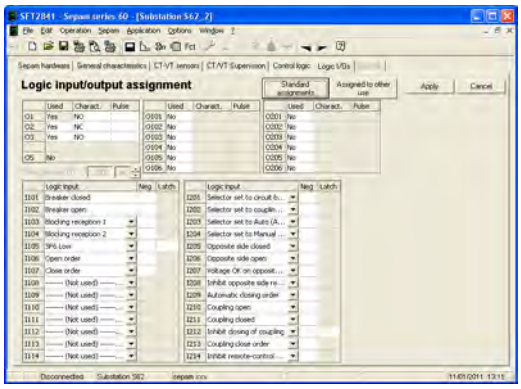

SFT2841: standard assignment of the inputs required for the AT function.

Logic input assignment

The logic inputs required for the AT function are to be assigned in the SFT2841 "Logic I/Os" screen.
The "Standard assignments" button proposes an assignment of the main inputs required for the AT function. The other inputs are to be assigned manually.

Logic output assignment in the control matrix

The assignment of the logic outputs required for the AT function takes place in 2 steps:

- declaration of the required logic outputs "Used", indicating the control mode of each output, in the SFT2841 "Logic I/Os" screen
- assignment of each predefined output associated with the AT function to a Sepam logic output in the SFT2841 "Control matrix" screen.

The predefined outputs associated with the AT function are as follows:

"Protection" button	Description	Use
59 - 1	Delayed output of the Phase overvoltage function (ANSI 59) Unit 1	Indication for the opposite side Sepam: voltage OK upstream of the incoming circuit breaker.
"Logic" button	**Description**	**Use**
NO circuit breaker closing	Predefined output V_CLOSE_NO_ORD of the AT function	Automatic closing order of normally open circuit breaker.
Coupling closing	Predefined output V_TIE_CLOSING of the AT function	Coupling circuit breaker close order.
Coupling tripping	Predefined output V_TIE_OPENING of the AT function	Coupling circuit breaker open order.
Breaker closing ready	Predefined output V_CLOSE_EN of the AT function	LED indication: the return to normal conditions are met. (neglecting the synchro-check)
Coupling closing ready	Predefined output V_TIE_CLOSE_EN of the AT function	LED indication: the coupling close conditions are met. (neglecting the synchro-check)

Automatic "two out of three" transfer
Characteristics

Setting			
Activity			
Setting range	On / Off		
Voltage return time			
Setting range	0 to 300 s		
Accuracy (1)	±2 % or from -10 ms to +25 ms		
Resolution	10 ms or 1 digit		
Normal coupling position			
Setting range	No coupling / Normally open / Normally closed		
Inputs			
Designation	**Syntax**	**Equations**	
Transfer order on fault	V_TRANS_ON_FLT	■	
Transfer off order	V_TRANS_STOP	■	
Outputs			
Designation	**Syntax**	**Equations**	**Matrix**
Tripping by 2/3 or 1/2 logic	V_2/3_TRIPPING		■
Tripping by automatic transfer	V_AT_TRIPPING		■
NO circuit breaker closing	V_CLOSE_NO_ORD		■
Breaker closing ready	V_CLOSE_EN		■
Coupling tripping	V_TIE_OPENING		■
Coupling closing ready	V_TIE_CLOSE_EN		■
Coupling closing	V_TIE_CLOSING		■
Coupling closing with synchro-check failed	V_TIESYNCFAIL		■

(1) *Under reference conditions (IEC 60255-6).*

Triggering the Motor start report (MSR)

Operation

This function is only found in motor applications. It is used to record values specific to motors, during the starting phase.
While there is no recording in progress, recording can be triggered by:

- the "starting in progress" output of the 48/51LR protection function
- the V_MSR_START output from the logic equation editor
- the remote control order TC51
- the "Trigger MSR" logic input
- the "Trigger MSR" GOOSE logic input

Recording can be conditional upon the closed circuit breaker position.

Block diagram

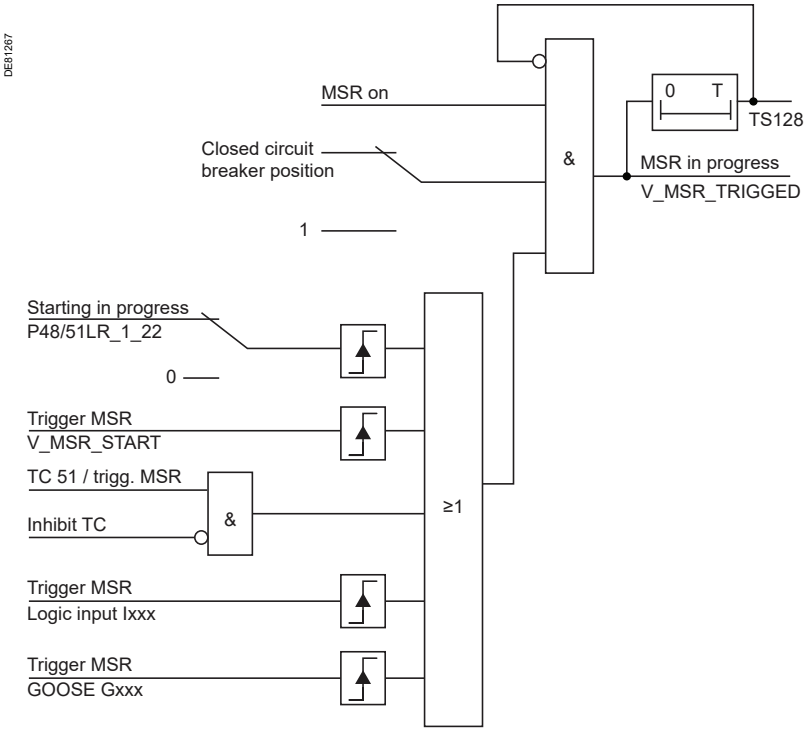

Characteristics

Inputs			
Designation	**Syntax**	**Equations**	**Matrix**
Trigger MSR	V_MSR_START	■	

Outputs			
Designation	**Syntax**	**Equations**	**Matrix**
MSR triggered	V_MSR_TRIGGED	■	

Activating / Deactivating the Data log function (DLG)

Operation

This function is found in all applications.
Depending on the chosen parameter setting, activation and deactivating the log of selected electrical values can be achieved by:

- Logic input or GOOSE type IEC 61850 logic input
- Logic equation editor
- remote control order
- SFT2841 software.

Block diagram

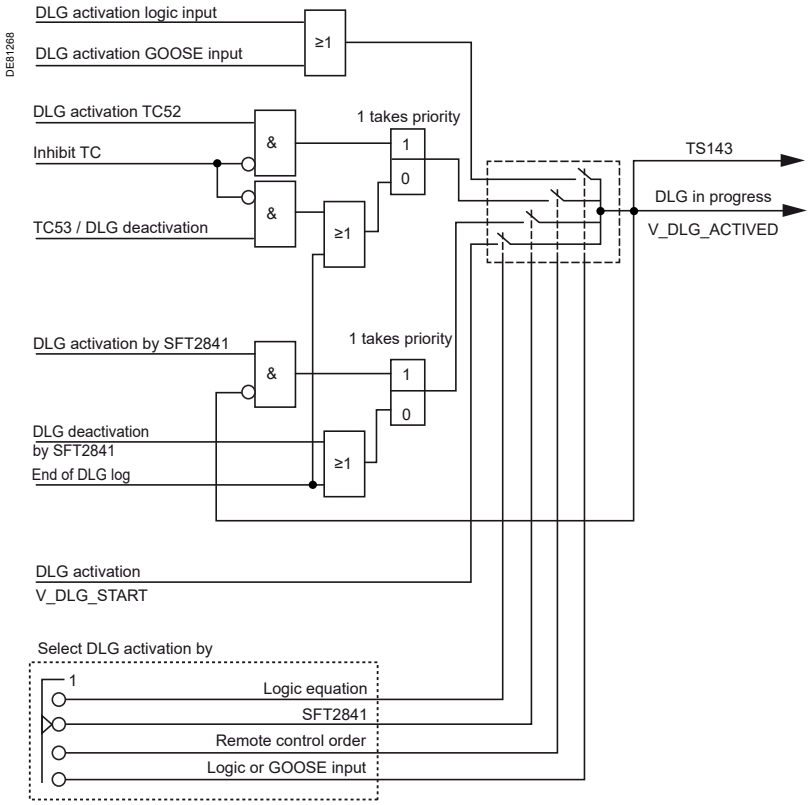

Characteristics

Inputs			
Designation	**Syntax**	**Equations**	**Matrix**
DLG activation	V_DLG_START	■	
Outputs			
Designation	**Syntax**	**Equations**	**Matrix**
DLG in progress	V_DLG_ACTIVED	■	

Change of phase rotation direction

Operation

This function is found in all applications.
The change of phase rotation direction can be triggered by:
- logic input or GOOSE type IEC 61850 logic input
- remote control order (TC)

The phase rotation direction can be defined as:
- positive sequence (123)
- negative sequence (132)

Block diagram

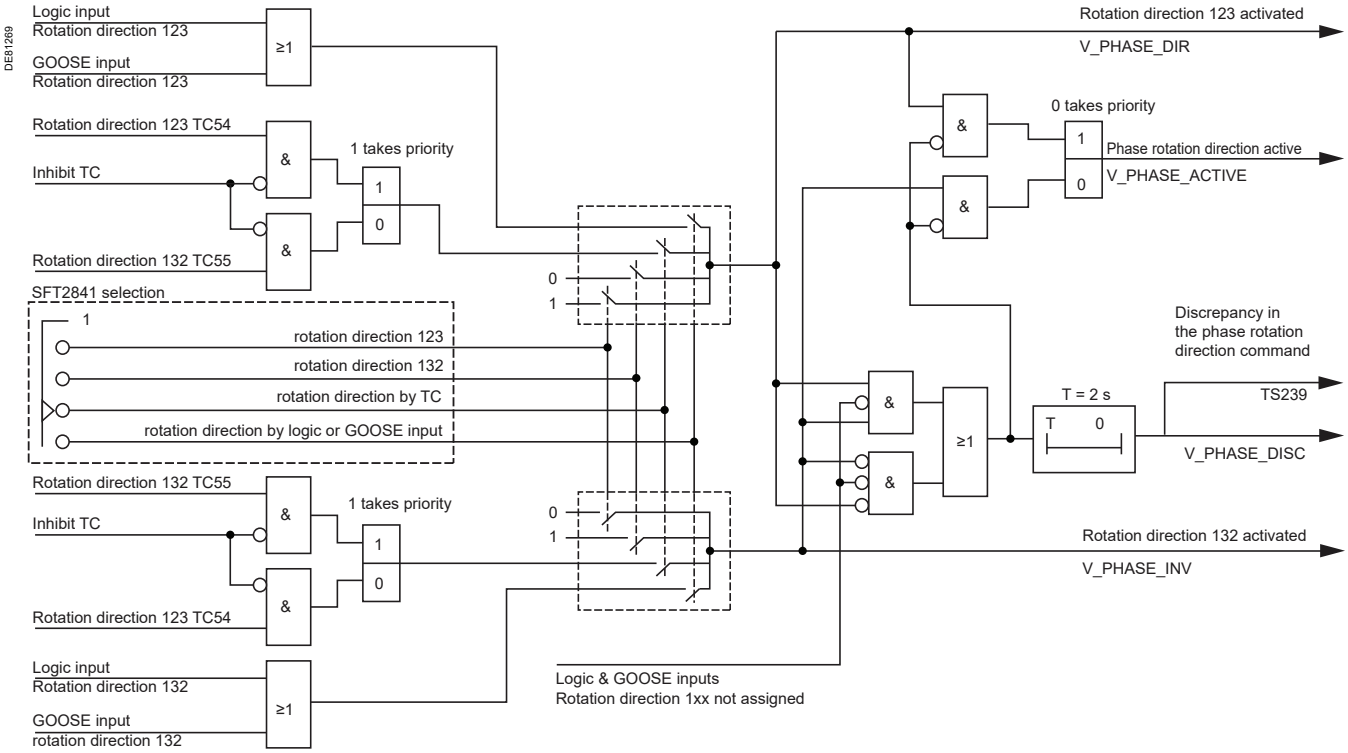

Characteristics

Outputs			
Designation	**Syntax**	**Equations**	**Matrix**
Discrepancy in the phase rotation direction	V_PHASE_DISC	■	
Phase rotation direction 123 activated	V_PHASE_DIR	■	
Phase rotation direction 132 activated	V_PHASE_INV	■	
Phase rotation direction active	V_PHASE_ACTIVE	■	

⚠ WARNING

WARNING: protection functions inhibited for 350 ms.
Form the time it receives the change phase rotation direction request, Sepam cannot protect the electrical network for 350 ms.
This inhibition of protection functions **can result** in death or serious injury.

Local indication
ANSI code 30

Operation

Events may be indicated locally on the front panel of Sepam by:
- appearance of a message on the display
- switching on of one of the 9 yellow LEDs.

Message type indication

Predefined messages

All the messages connected to the standard Sepam functions are predefined and available in two language versions:
- in English, factory-set messages, not modifiable
- in the local language, according to the version delivered.

The language version is chosen at the time of Sepam parameter setting.
The messages are visible on the Sepam display and on the SFT2841 Alarms screen.
The number and type of predefined messages depend on the type of Sepam. The table below gives the complete list of all predefined messages.

Functions			English	Local language (e.g. French)
Control and monitoring	**ANSI code**			
External trip (1 to 3)			EXT. TRIP (1 to 3)	DECLT.EXT. (1 à 3)
Buchholz trip			BUCHH/GAS TRIP	BUCHH/GAZ DECL^{T}
Buchholz alarm			BUCHHOLZ ALARM	BUCHH ALARME
Thermostat trip			THERMOS^{T}. TRIP	THERMOS^{T}.DECL^{T}.
Thermostat alarm			THERMOS^{T}. ALARM	THERM^{OT}.ALARME
Pressure trip			PRESSURE TRIP	PRESSION DECL^{T}
Pressure alarm			PRESSURE ALARM	PRESSION ALARME
Thermistor trip			THERMISTOR TRIP	THERMISTOR DECL.
Thermistor alarm			THERMISTOR AL.	THERMISTOR AL.
Control fault			CONTROL FAULT	DEFAUT COMMANDE
Load shedding			LOAD SHEDDING	DÉLESTAGE
Genset shutdown			GENSET SHUTDOWN	ARRÊT GROUPE
De-excitation			DE-EXCITATION	DÉSEXCITATION
Tripping order by automatic transfer			AUTO TRANSFER	AUTO TRANSFER
Phase rotation direction command complementarity fault			ROTATION DISC CMD	DISC CDE ROTATION
Diagnosis	**ANSI code**			
SF6 fault			SF6 LOW	BAISSE SF6
MET148-2 No 1 RTD fault			RTD'S FAULT MET1 (1)	DEF SONDE MET1 (1)
MET148-2 No 2 RTD fault			RTD'S FAULT MET2 (1)	DEF. SONDE MET2 (1)
VT supervision	60FL	Phase VT supervision	VT FAULT	DEFAUT TP
		Residual VT supervision	VT FAULT Vo	DEFAUT TP Vo
CT supervision	60	Main CT supervision	CT FAULT	DEFAUT TC
Trip circuit supervision (TCS) fault or mismatching of open/closed position contacts	74		TRIP CIRCUIT	CIRCUIT DECL^{T}
Closing circuit fault			CLOSE CIRCUIT	CIRCUIT ENCL^{T}
Cumulative breaking current monitoring			ΣI²BREAKING >>	ΣI² COUPES
Battery monitoring			BATTERY LOW (1)	PILE FAIBLE (1)

(1) *RTD FAULT, BATTERY LOW messages: refer to the maintenance chapter.*

Local indication
ANSI code 30

Functions			English	Local language (e.g. French)
Protection	**ANSI code**			
Overspeed	12		OVERSPEED	VITESSE >>
Underspeed	14		UNDERSPEED	VITESSE <<
Underimpedance	21B		UNDERIMPEDANCE	IMPEDANCE <<
Synchro-check	25	Synchrochecked close request in process	SYNC.IN PROCESS	SYNC. EN COURS
		Synchrochecked close request successful	SYNC. OK	SYNC. REUSSIE
		Closing failed, out-of-sync	SYNC. FAILURE	ECHEC SYNC.
		Closing failed, out-of-sync, cause dU	SYNC. FAILED dU	ECHEC SYNC. dU
		Closing failed, out-of-sync, cause dPHI	SYNC. FAILED dPhi	ECHEC SYNC. dPhi
		Closing failed, out-of-sync, cause dF	SYNC. FAILED dF	ECHEC SYNC. dF
		Stop closing with synchro-check	STOP SYNC.	STOP SYNC.
		Coupling closing with synchro-check failed	TIE SYNC. FAILED	ECHEC COUPLAGE
Undervoltage	27		UNDERVOLTAGE (1)	TENSION << (1)
Positive sequence undervoltage	27D	Positive sequence undervoltage	UNDERVOLTAGE.PS	TENSION Vd <<
		Reverse rotation	ROTATION -	ROTATION -
Active overpower	32P		OVER P	P >>
Reactive overpower	32Q		OVER Q	Q >>
Phase undercurrent	37		UNDER CURRENT	COURANT <<
Phase underpower	37P		UNDER POWER	P <<
Temperature monitoring	38/49T	Alarm	OVER TEMP. ALM	T° ALARME
		Tripping	OVER TEMP. TRIP	T° $DECL^T$
Field loss	40		FIELD LOSS	PERTE EXCITATION
Negative sequence / unbalance	46		UNBALANCE I	DESEQUILIBRE I
Negative sequence overvoltage	47		UNBALANCE U	DESEQUILIBRE U
Excessive starting time, locked rotor	48/51LR	Excessive starting time	LONG START	DEMARRAGE LONG
		Locked rotor in normal operation	ROTOR BLOCKING	BLOCAGE ROTOR
		Locked rotor on start	ST^{RT} LOCKED ROT^R	BLOC ROTOR DEM
Thermal overload	49RMS	Alarm	THERMAL ALARM	$ECHAUF^T$.ALARME
		Tripping	THERMAL TRIP	$ECHAUF^T.DECL^T$.
		Inhibit closing	START INHIBIT	DEMARRAGE INHIBE
Breaker failure	50BF		BREAKER FAILURE	DEF. DISJONCT.
Phase overcurrent	50/51		PHASE FAULT (2)	DEFAUT PHASE (2)
Earth fault	50N/51N		EARTH FAULT	DEFAUT TERRE
Voltage-restrained overcurrent	50V/51V		O/C V REST (2)	DEF. PHASE RET. U (2)
Overvoltage	59		OVERVOLTAGE (1)	TENSION >> (1)
Neutral voltage displacement	59N		Vo FAULT	DEFAUT Vo
Restricted earth fault	64REF		RESTRIC. EARTH FAULT	TERRE RESTREINTE
Starts per hour	66		START INHIBIT	DEMARRAGE INHIBE
Directional phase overcurrent	67		DIR. PHASE FAULT (2)	DEFAUT PHASE DIR. (2)
Directional earth fault	67N/67NC		DIR. EARTH FAULT	DEFAUT TERRE DIR.
Recloser	79	Cycle x	CYCLE (1 to 4) (3)	CYCLE (1 à 4) (3)
		Reclosing successful	CLEARED FAULT	DEFAUT ELIMINE
		Permanent trip	FINAL TRIP	$DECL^T$ DEFINITIF
Overfrequency	81H		OVER FREQ.	FREQUENCE >>
Underfrequency	81L		UNDER FREQ.	FREQUENCE <<
Rate of change of frequency	81R		ROCOF	DERIV. FREQ

(1) *With indication of the faulty phase, when used with phase-to-neutral voltage.*
(2) *With indication of the faulty phase.*
(3) *With indication of the protection unit that has initiated the cycle (phase fault, earth fault, ...).*

Personalized user messages

100 additional messages may be created using the SFT2841 software to link a message to a logic input or the result of a logic equation, for example, or to replace a predefined message by a user message.

User message editor in SFT2841

The user message editor is included in the SFT2841 software and may be accessed in connected or disconnected mode from the control matrix screen:

■ display the "Event" tab on the screen: the user messages appear

■ double-click on one of the messages displayed to activate the user message editor.

User message editor functions

■ creation and modification of user messages:

□ in English and the local language

□ by text input or importing of an existing bitmap file (*.bmp) or by point to point drawing

■ deletion of user messages

■ assignment of predefined or user messages to an event defined in the control matrix:

□ from the control matrix screen, "Events" tab, double-click on the event to be linked to a new message

□ select the new predefined or user message from the messages presented

□ "assign" it to the event.

The same message may be assigned to several events, with no limitations.

Message display in SFT2841

■ The predefined messages are stored in Sepam's memory and are displayed in connected mode. In disconnected mode, the last messages stored in Sepam connected mode are displayed.

■ The user messages are saved with the other Sepam parameters and protection settings and are displayed in connected and disconnected modes.

Message processing on the Sepam display

When an event occurs, the related message appears on the Sepam display.

The user presses the clear key to clear the message and enable normal consultation of all the display.

The user must press the reset key to acknowledge latched events (e.g. protection outputs).

The list of messages remains accessible in the alarm history (⚠ key), in which the last 16 messages are stored. The last 250 messages may be consulted with the SFT2841 software.

To delete the messages stored in the alarm history:

■ display the alarm history on the display

■ press the clear key.

LED indication

The 9 yellow LEDs on the front of Sepam are assigned by default to the following events:

LED	Event	Name on label on front panel
LED 1	Tripping of protection 50/51 unit 1	I>51
LED 2	Tripping of protection 50/51 unit 2	I>>51
LED 3	Tripping of protection 50N/51N unit 1	Io > 51N
LED 4	Tripping of protection 50N/51N unit 2	Io >> 51N
LED 5		Ext
LED 6		
LED 7	Circuit breaker open (I102)	0 Off
LED 8	Circuit breaker closed (I101)	I On
LED 9	Tripping by circuit breaker control	Trip

The default parameter setting may be personalized using the SFT2841 software:

■ LEDs are assigned to events in the "LEDs" tab of the control matrix screen

■ editing and printing of personalized labels are proposed in the general characteristics screen.

Local control

PE80330



Local control using the mimic-based UMI

Description

Switchgear may be controlled locally using Easergy Sepam series 60 units equipped with the mimic-based UMI.
The control functions available are:
- selection of the Sepam control mode
- viewing of device status on the animated mimic diagram
- local control of the opening and closing of all the devices controlled by Sepam

Selection of the Sepam control mode

A key-switch on the front of the mimic-based UMI is used to select the Sepam control mode. Three modes are available: Remote, Local or Test.

In Remote mode:
- remote control orders are taken into account
- local control orders are disabled, with the exception of the circuit breaker open order.

Remote mode is indicated by the variable V_MIMIC_REMOTE = 1.

In Local mode:
- remote control orders are disabled, with the exception of the circuit breaker open order.
- local control orders are enabled.

Local mode is indicated by the variable V_MIMIC_LOCAL = 1.

Test mode should be selected for tests on equipment, e.g. during preventive maintenance operations:
- all functions enabled in Local mode are available in Test mode
- no time-tagged events are sent by the communication link.

Test mode is indicated by the variable V_MIMIC_TEST = 1.

Mimic diagram and symbols

A mimic diagram or single-line diagram is a simplified diagram of an electrical installation. It is made up of a fixed background on which symbols and measurements are placed.
The mimic diagram editor integrated in the SFT2841 software may be used to personalize and setup mimic diagrams.

The symbols making up the mimic-diagram constitute the interface between the mimic-based UMI and the other Sepam control functions.
There are three types of symbols:
- fixed symbol: represents the electrotechnical devices that are neither animated or controlled, e.g. a transformer
- animated symbol with one or two inputs: represents the electrotechnical devices that change on the mimic diagram, depending on the symbol inputs, but cannot be controlled via the Sepam mimic-based UMI.
This type of symbol is used for switch-disconnectors without remote control, for example.
- controlled symbol with one or two inputs/outputs: represents the electrotechnical devices that change on the mimic diagram, depending on the symbol inputs, and can be controlled via the Sepam mimic-based UMI.
This type of symbol is used for circuit breakers, for example.
The symbol outputs are used to control the electrotechnical device:
  - directly via the Sepam logic outputs
  - by the switchgear control function
  - by logic equation.

Symbol animation

Depending on the value of their inputs, symbols change. A graphic representation corresponds to each state. Animation is carried out automatically by changing the symbol each time the state changes.
The symbol inputs must be assigned directly to the Sepam inputs indicating the position of the symbolized switchgear.

Animated symbols with one input
"Animated -1 input" and "Controlled -1 input/output" symbols are animated symbols with one input. The value of the input determines the state of the symbol:
- input set to 0 = inactive
- input set to 1 = active

This type of symbol is used for simple presentation of information, for example the racked out position of a circuit breaker.

Symbol inputs	Symbol state	Graphic representation (example)
Input = 0	Inactive	
Input = 1	Active	

Animated symbols with two inputs
"Animated - 2 inputs" and "Controlled - 2 inputs/outputs" symbols are animated symbols with two inputs, one open and the other closed.
This is the most common situation in representing switchgear positions.
The symbol has three states, i.e. three graphic representations: open, closed and unknown.
The latter is obtained when the inputs are not matched, in which case it is impossible to determine the position of the switchgear.

Symbol inputs	Symbol state	Graphic representation (example)
Input 1 (open) = 1 Input 2 (closed) = 0	Open	
Input 1 (open) = 0 Input 2 (closed) = 1	Closed	
Input 1 (open) = 0 Input 2 (closed) = 0	Unknown	
Input 1 (open) = 1 Input 2 (closed) = 1	Unknown	

Local control using a symbol

"Controlled - 1 input/output" and "Controlled - 2 inputs/outputs" symbols are used to control the switchgear corresponding to the symbol via the Sepam mimic-based UMI.

Control symbols with two outputs
"Controlled - 2 inputs/outputs" symbols have two control outputs for opening and closing of the symbolized device.
An order on the mimic-based UMI sends a 300 ms pulse on the controlled output.

Control symbols with one output
"Controlled - 1 input/output" symbols have one control output. The output remains in the last state to which it was ordered.
A new order results in a change in the output state.

Inhibition of orders
"Controlled - 1 input/output" and "Controlled - 2 inputs/outputs" symbols have two inhibition inputs that, when set to 1, block opening and closing orders. This makes it possible to create interlocking systems or other order-disabling systems that are taken into account by the UMI.

Symbol inputs/outputs

Depending on the desired operation of the mimic-based UMI, Sepam variables must be assigned to the inputs of animated symbols and the inputs/outputs of controlled symbols.

Sepam variables assigned to symbol inputs

Sepam variables		Name	Use
Logic inputs		Ixxx	Symbol animation directly based on device positions
Outputs of predefined functions	Switchgear control	V_CLOSE_INHIBITED V_CLOSE_BLOCKED	Circuit-breaker operation disabled
	Position of key on the front panel of Sepam	V_MIMIC_LOCAL, V_MIMIC_REMOTE, V_MIMIC_TEST	■ Representation of key position ■ Operation disabled depending on the control mode
	Logic equations	V_MIMIC_IN_1 to V_MIMIC_IN_16	■ Representation of Sepam internal status conditions ■ Cases where operation is disabled

Sepam variables to be assigned to symbol outputs

Sepam variables		Name	Use
Logic outputs		Oxxx	Direct control of devices
Inputs of predefined functions	Switchgear control	V_MIMIC_CLOSE_CB V_MIMIC_OPEN_CB	Circuit-breaker control using the switchgear-control function via the mimic-based UMI
	Logic equations	V_MIMIC_OUT1 to V_MIMIC_OUT16	Order processing by logic functions: interlocking, order sequence, etc.

Block diagram

The block diagrams below present the functions ensured by the controlled symbols, based on two examples.
Voluntary user control orders (selection of the device to be controlled in the mimic diagram and action on a control key) are represented in the block diagrams by the following icons:

Ⓞ : open order

Ⓘ : close order

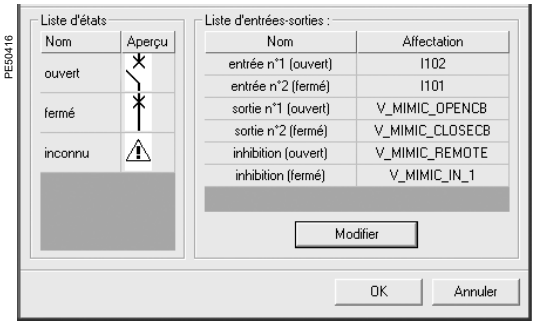

SFT2841: example of the logic input / output assignment of a symbol with two outputs.

Local control using symbols with two outputs

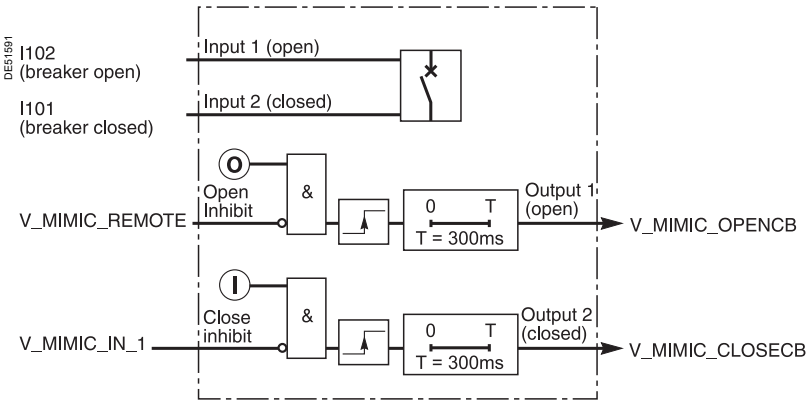

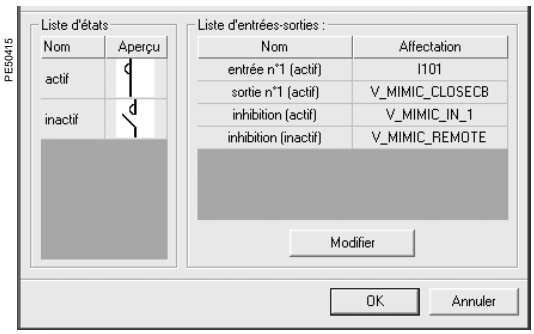

SFT2841: example of the logic input / output assignment of a symbol with one output.

Local control using a symbol with one output

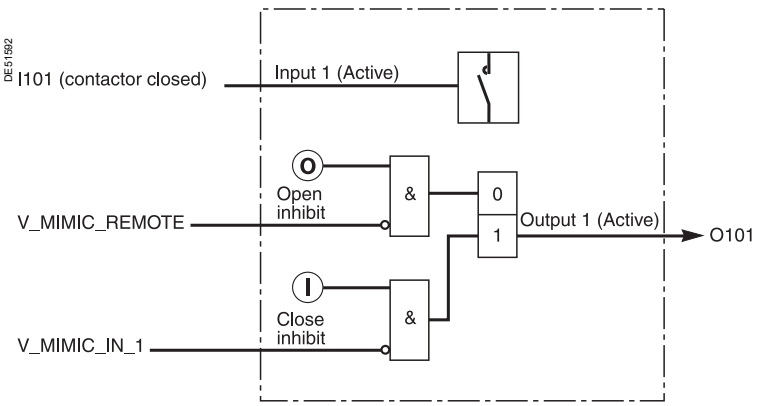

Control matrix

Description

The control matrix is used for simple assignment of the logic outputs and LEDs to data produced by the protection functions, control logic and logic inputs.
Each column creates a logic OR between all the lines selected.
The matrix may also be used to display the alarms associated with the data.
It guarantees the consistency of the parameter setting with the predefined functions.
The following data are managed in the control matrix and may be set using the SFT2841 software tool.

Control matrix inputs

"Protection" button	**Meaning**	**Comments**
All application protection functions	Protection tripping output and additional outputs when applicable	
"Inputs" button		
Logic inputs I101 to I114	According to configuration	If first MES120 module is configured
Logic inputs I201 to I214	According to configuration	If second MES120 module is configured
"Equations" button	**Meaning**	**Comments**
V1 to V20	Logic equation editor outputs	
"Logic" button	**Meaning**	**Comments**
Switchgear control		
Closing	Closing by switchgear control function	By default on O3. Only available if switchgear control is in circuit breaker mode
Tripping	Tripping by switchgear control function	Forced on O1, if switchgear control is in circuit breaker mode
Inhibit closing	Inhibition by switchgear control function	By default on O2. Only available if switchgear control is in circuit breaker mode
Contactor control	Contactor control	Forced on O1, if switchgear control is in circuit breaker mode
Pick-up	Logic OR of the instantaneous output of all protection units with the exception of protection units 38/49T, 48/51LR, 49RMS, 66.	
Drop-out	A protection unit time delay counter has not yet gone back to 0.	
Logic discrimination		
Logic discrimination trip	Tripping order sent by logic discrimination function	Only when logic discrimination function is used without switchgear control function
Blocking send 1	Sending of blocking signal to next Sepam in logic discrimination chain 1	By default on O102.
Blocking send 2	Sending of blocking signal to next Sepam in logic discrimination chain 2	By default on O103
Motor/generator control		
Load shedding	Sending of a load shedding order	Motor application
Genset shutdown	Sending of a prime mover shutdown order	Generator application
De-excitation	Sending of a de-excitation order	Generator application
Recloser		
Recloser in service	The recloser is in service	
Reclosing successful	The recloser has successfuly reclosed	Pulse type output
Permanent trip	The circuit breaker is permanently open after the reclosing cycles	Pulse type output
Recloser ready	The recloser is ready to operate	
Recloser cycle 1	Cycle 1 in progress	
Recloser cycle 2	Cycle 2 in progress	
Recloser cycle 3	Cycle 3 in progress	
Recloser cycle 4	Cycle 4 in progress	
Closing by recloser	A closing order is given by the recloser	
"GOOSE" button	**Meaning**	**Comments**
Logic inputs G401 to G416 and G501 to G516	According to configuration	Only with ACE850 configured

Control matrix

"Logic" button	Meaning	Comments
Diagnosis		
TCS fault	Trip circuit fault	
CCS fault	Closing circuit fault	
TC / breaker position discrepancy	Discrepancy between the last state ordered by the remote monitoring and control system and the position of the circuit breaker	
Breaker monitoring	A circuit breaker or contactor open or close order has not been executed	
Reverse phase rotation	Reverse voltage rotation due to a wiring error	
Additional-phase reverse rotation	Reverse rotation of additional phase voltages due to a wiring error	
Disturbance recording inhibited	Disturbance recording inhibited	
Cumulative breaking current monitoring	Overshooting of the cumulative breaking current set point	
Low battery fault	Battery low or absent	
MET148-2 No 1 fault MET148-2 No 2 fault	Hardware problem on an MET 148-2 module (module 1 or 2) or on an RTD	
Watchdog	Monitoring of Sepam operation	Always on O5 if used
CT supervision		
CT fault	I current input CT fault	
VT supervision		
VT fault, phase channel	V voltage input phase VT fault	
VT fault, residual channel	V0 voltage input residual VT fault	
Synchro-check		
Closing with synchro-check	Circuit breaker close request with synchro-check by the ANSI 25 function has been initiated	Switchgear control with synchro-check function
Closing with synchro-check completed	Breaker closing with synchro-check by the ANSI 25 function successful	Switchgear control with synchro-check function
Closing failed, out-of-sync	Synchronism conditions too short to enable breaker closing	Switchgear control with synchro-check function
Closing failed, out-of-sync, cause dU	Breaker closing inhibited because sources are out-of-sync due to an excessive voltage difference	Switchgear control with synchro-check function
Closing failed, out-of-sync, cause dPHI	Breaker closing inhibited because sources are out-of-sync due to an excessive phase difference	Switchgear control with synchro-check function
Closing failed, out-of-sync, cause dF	Breaker closing inhibited because sources are out-of-sync due to an excessive frequency difference	Switchgear control with synchro-check function
Stop closing with synchro-check	A synchrochecked circuit breaker close request has been interrupted	Switchgear control with synchro-check function
Automatic transfer		
Coupling closing with synchro-check failed	The coupling close request initiated by automatic transfer has failed because the sources are out-of-sync	
Tripping by automatic transfer	Breaker tripping initiated by automatic transfer (tripping is performed by the switchgear control function)	
Tripping by 2/3 or 1/2 logic	Breaker tripping initiated by 2/3 or 1/2 logic (tripping is performed by the switchgear control function)	
NO circuit breaker closing	Normally open circuit breaker close order for automatic transfer function	
Breaker closing ready	Indication that breaker closing is possible to return to normal operation	
Coupling closing	Coupling closing order for automatic transfer function	
Coupling closing ready	Indication that coupling closing is possible to return to normal operation	
Coupling tripping	Coupling tripping order for automatic transfer function	

Logic equations

Adaptation of the predefined control and monitoring functions by the addition of simple logic functions.

Use

This function may be used to configure simple logic functions by combining data received from the protection functions, logic inputs, remote control orders or the mimic-based UMI.
GOOSE logic inputs (Gx) available with the IEC 61850 protocol are not managed.
By using logic operators (AND, OR, XOR, NOT) and timers, new processing operations and indications may be added to the existing ones.
The logic functions produce outputs that may be used:
- in the matrix to control output relays, switch on a LED or display new messages
- in the protection functions to create, for example, new inhibit or reset conditions
- in the main predefined control and monitoring functions to complete processing operations or add new cases of tripping or genset shutdown, for example
- for mimic diagram animation.

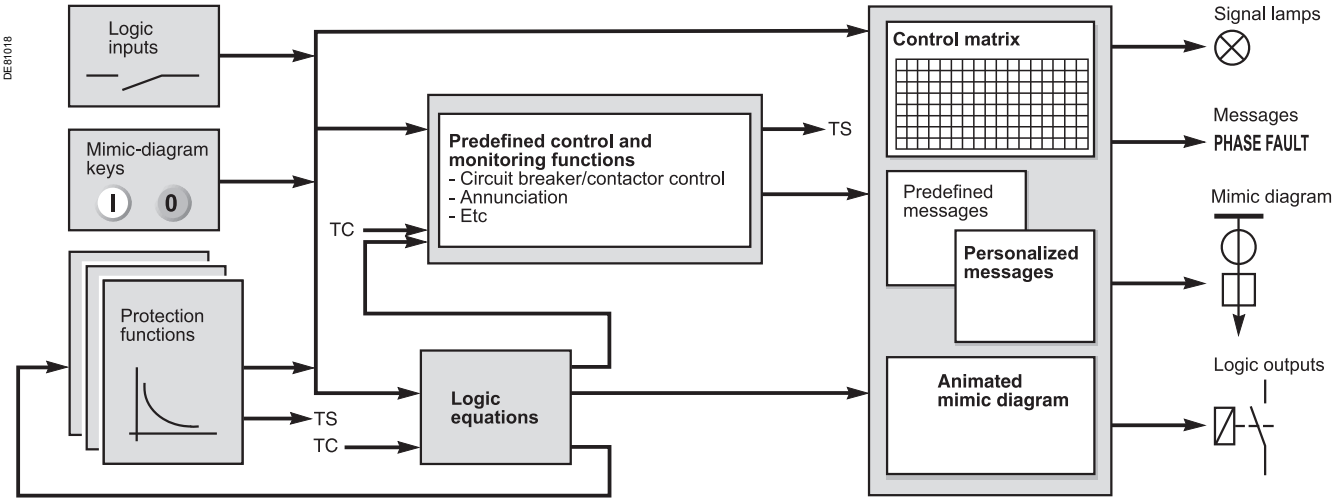



SFT2841: logic equation editor.

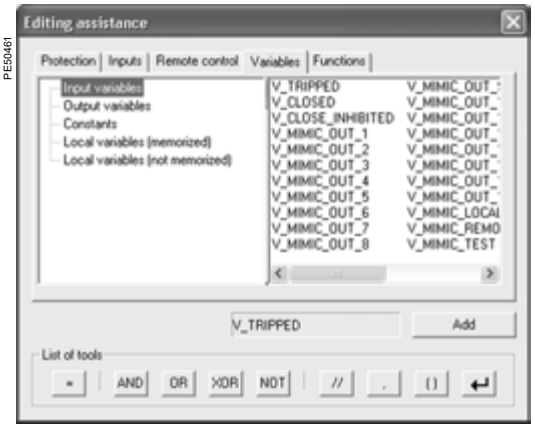

SFT2841: data input assistance tool.

Logic function configuration

Logic functions are entered in text format in the SFT2841 equation editor. Each line includes a logic operation, the result of which is assigned to a variable.

Example:
V1 = P5051_2_3 OR I102.
The variable V1 is assigned the result of the logic OR operation involving the value from protection function 50/51 and logic input I102.

The variables may be used for other operations or as outputs to produce actions in the control matrix, protection functions or predefined control and monitoring functions.
A program is a series of lines executed sequentially every 14 ms.
A data input assistance tool provides quick access to each of the equation editor operators and variables.

Description of operations

Operators

- **=**: assignment of a result
V2 = VL3 //V2 is assigned the value of VL3
- **NOT**: logic inversion
VL1 = NOT VL2 // VL1 is assigned the opposite logic state of VL2
- **OR**: logic OR
V1 = VL3 OR I103 // V1 is assigned state 1 if VL3 or I03 are in state 1
- **AND**: logic AND
VV3 = VL2 AND VV1 // VV3 is assigned state 1 if VL2 and VV3 are in state 1
- **XOR**: exclusive OR
V3 = VL1 XOR VL2 **//** V3 is assigned state 1 if only one of the variables VL1 or VL2 is in state 1.
This is equivalent to **V3 = (V1 AND (NOT V2)) OR (V2 AND (NOT V1))**
- **//**: commentary
The characters on the right are not processed
- **(,)**: the operations may be grouped between brackets to indicate the order in which they are carried out
V1 = (VL3 OR VL2) AND I213.

Logic equations

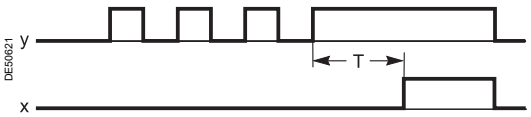

*x = **TON**(y, t).*

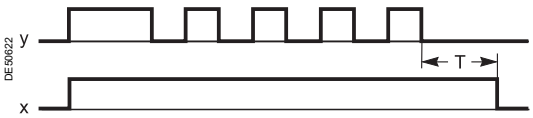

*x = **TOF**(y, t).*



SFT2841: timer editor.

Functions

■ x **= SR**(y, z): bistable with priority to Set
x is set to 1 when y is equal to 1
x is set to 0 when z is equal to 1 (and y is equal to 0)
otherwise x is not changed.
V1 = SR(I104, I105) // I104 sets V1 to 1, I105 sets V1 to 0

■ **LATCH**(x, y, …): latching of variables x, y, ...
The variables are maintained constantly at 1 after being initially set. They are reset to 0 when Sepam is reset (reset button, external input or remote control order).
The LATCH function accepts as many parameters as the number of variables that the user wishes to latch.
It applies to the entire program, whatever the position of LATCH in the program. For easier reading, it is advisable to put it at the start of the program.
LATCH(V1, VL2, VV3) // V1, VL2 and VV3 are latched, ie. once they are set to 1, only a Sepam reset can set them back to 0

■ x **= TON**(y, t): "on" delay timer
The variable x goes to 1 t ms after variable y goes to 1.
V1 = TON(I102.2000) // used to filter input I102 which must be present for
// 2 s to be taken into account in V1

■ x **= TOF**(y, t): "off" delay timer.
The variable x goes to 0 t ms after variable y goes to 0).
VL2 = TOF(VL1, 100) // VL2 stays at 1 for 100 ms after VL1
// goes back to 0

■ x **= PULSE**(s, i, n): time-tagger
Used to generate n periodic pulses, separated by an interval i as of the starting time s
s is expressed in hours:minutes:seconds
i is expressed in hours:minutes:seconds
n is a whole number (n = -1: repeated until the end of the day).
V1 = PULSE (8:30:00, 1:0:0.4) will generate 4 pulses at 1-hour intervals at 8 h 30, 9 h 30, 10 h 30 and 11 h 30. This will be repeated every 24 hours.
The pulses last for a 14 ms cycle. V1 is assigned the value of 1 during the cycle.
If necessary, V1 may be extended using the **TOF, SR** or **LATCH** functions.

Timer values

A timer editor is used to give a name and value to each timer. The name may then be used in the **TON** and **TOF** functions. The timer value may therefore be adjusted without changing the program content.
V1 = TON (VL1, start) // start set to 200 ms in the timer editor.

Maximum number of functions

The number of time delays (**TON**, **TOF**) and time-taggers (**PULSE**) is globalized and may not be more than 16.
There is no limitation for the **SR** and **LATCH** functions.

Description of variables

■ input variables: they come from the protection functions, logic inputs or predefined control functions. They may only appear on the right of the = sign
■ output variables: they are produced by the equation editor to generate actions in the matrix, protection functions or predefined control functions
■ local variables: they are intended for intermediary calculations and are not available outside the logic equation editor.

Input variables		
Type	**Syntax**	**Example, meaning**
Logic inputs	Ixxx	I101: input 1 of MES120 No 1 module I212: input 12 of MES120 No 2 module
Protection function outputs	Pnnnn_x_y nnnn: ANSI code x: unit y: data	P50/51_2_1: Protection 50/51, unit 2, delayed output. The protection function output data numbers are given in the characteristics of each function and may be accessed using the data input assistance tool.
Remote control orders	TC1 to TC64	Pulse type value (duration of one 14 ms cycle) of remote control orders received
Predefined control function outputs	V_TRIPPED	Tripping order present at switchgear control function output
	V_CLOSE_INHIBITED	Inhibit closing order present at switchgear control function output
	V_CLOSED	Closing order present at switchgear control function output
Phase rotation direction management functions output	V_PHASE_DIR	The phase rotation direction 123 command is active
	V_PHASE_INV	The phase rotation direction 132 command is active
	V_PHASE_DISC	The phase rotation direction commands are not complementary after more than 2 s
Mimic-based UMI outputs	V_MIMIC_OUT_1 to V_MIMIC_OUT_16	Variables that may be assigned to the mimic diagram symbol outputs and that change values when control orders are transmitted from the mimic-based UMI
	V_MIMIC_LOCAL V_MIMIC_TEST, V_MIMIC_REMOTE	Position of the key on the mimic-based UMI
Output variables		
Type	**Syntax**	**Example, meaning**
Outputs to matrix	V1 to V20	They may initiate LEDs, logic outputs or messages in the matrix.
Protection function inputs	Pnnnn_x_y nnn: ANSI code x: unit y: data	P50N/51N_6_113: Protection 50N/51N, unit 6, inhibit order. The protection function output data numbers are given in the characteristics of each function and may be accessed using the data input assistance tool.
Predefined control function inputs	V_TRIPCB	Tripping of circuit breaker (contactor) by the switchgear control function. Used to adapt tripping and recloser activation conditions.
	V_INHIBCLOSE	Inhibition of circuit breaker (contactor) closing by the switchgear control function. Used to add circuit breaker (contactor) inhibit closing conditions.
	V_CLOSECB	Closing of circuit breaker (contactor) by the switchgear control function. Used to generate a circuit breaker (contactor) close order based on a particular condition.
	V_SHUTDOWN	Shutdown of genset prime mover. Used to adapt cases of genset shutdown
	V_DE_EXCITATION	Generator de-excitation Used to adapt cases requiring generator de-excitation
	V_FLAGREC	Data saved in disturbance recording. Used to save a specific logic state in addition to those already present in disturbance recording.
	V_RESET	Sepam reset
	V_CLEAR	Clearing of alarms present
	V_INHIBIT_RESET_LOCAL	Inhibition of Sepam reset by UMI Reset key.
	V_CLOSE_NOCTRL	Breaking device closing enabled without synchro-check. Used to adapt the Switchgear control function
	V_TRANS_ON_FLT	Automatic transfer order on fault. Used to adapt automatic transfer
	V_TRANS_STOP	Stopping automatic transfer Used to adapt automatic transfer
	V_DLG_START	Data log function activation
	V_MSR_START	Start an MSR
Local variables, constants		
Type	**Syntax**	**Example, meaning**
Local variables stored	VL1 to VL31	The values of these variables are saved in the event of an auxiliary power outage and are restored when Sepam starts again.
Local variables not stored	VV1 to VV31	The values of these variables are not saved in the event of an auxiliary power outage. They are assigned the value of 0 when Sepam starts.
Constants	K_1, K_0	Value not modifiable K_1: always 1 K_0: always 0

Processing in the event of auxiliary power outage
All the variables, with the exception of the variables VVx, are saved in the event of a Sepam auxiliary power outage. The states of the variables are restored when the power is recovered, allowing the states produced by **LATCH**, **SR** or **PULSE** type memory operators to be saved.

Special cases
■ brackets must be used in expressions that comprise different **OR, AND, XOR or NOT** operators:
□ **V1 = VL1 AND I12 OR P27/27S_1_1. //** expression incorrect
□ **V1 = (VL1 AND I12) OR P27/27S_1_1. //** expression correct
□ **V1 = VL1 OR I12 OR P27/27S_1_1. //** expression correct
■ protection input/output variables (Pnnn_x_y) may not be used in the **LATCH** function
■ function parameters may not be expressions:
□ **VL3 = TON ((V1 AND V3), 300) //** expression incorrect
□ **VL4 = V1 AND V3**
□ **VL3 = TON (VL4, 300) //** correct.

Use limit
The number of operators and functions (**OR, AND, XOR, NOT, =, TON, TOF, SR, PULSE** is limited to 200.

Examples of applications

■ **latching of recloser permanent trip signal**
By default, this signal is of the pulse type at the recloser output. If required by operating conditions, it may be latched as follows:
LATCH (V1) // V1 may be latched
V1 = P79_1_204 // recloser "permanent trip" output.
V1 may then control a LED or output relay in the matrix.

■ **latching of a LED without latching the protection function**
Certain operating conditions call for the latching of indications on the front panel of Sepam, without latching of the tripping output O1.
LATCH (V1, V2) // V1 and V2 may be latched
V1 = P50/51_1_1 OR P50/51_3_1 // tripping, units 1 and 3 of protection 50/51
V2 = P50/51_2_1 OR P50/51_4_1 // tripping, units 2 and 4 of protection 50/51
V1 and V2 must be configured in the matrix to control 2 front panel LEDs.

■ **circuit breaker tripping if input I113 is present for more than 300 ms**
V_TRIPCB = TON (I113, 300).

■ **live line work (example 1)**
If work is underway with power on (indicated by input I205), the relay behavior is to be changed as follows:
1 – circuit breaker tripping by the instantaneous output of protection 50/51 unit 1 or 50N/51N unit 1 AND if input I205 is present:
V_TRIPCB = (P50/51_1_1 OR P50N/51N_1_1) AND I205
2 – Inhibit recloser:
P79_1_113 = I205

■ **live line work (example 2)**
The user wishes to inhibit protection functions 50N/51N and 46 by an input I204:
P50N/51N_1_113 = I204
P46_1_113 = I204

■ **validation of a 50N/51N protection function by logic input I210**
A 50N/51N protection function with a very low threshold must only initiate tripping of the circuit breaker if it is validated by an input. The input comes from a relay which gives a very accurate measurement of the neutral point current:
V_TRIPCB = P50N/51N_1_3 AND I210

■ **inhibition of circuit breaker closing if thermal alarm thresholds are overrun**
The temperature protection function 38/49T supplies 16 alarm bits. If one of the first three bits is activated (1 state), the user wishes to inhibit circuit breaker closing
V_INHIBCLOSE = P38/49T_1_10 OR P38/49T_2_10 OR P38/49T_3_10

■ **remote control order to inhibit protection 50/51 unit 1**
VL1=SR(TC63,TC64) // TC63 set inhibition, TC64 reset inhibition
P50/51_1_113 = VL1 // VL1 is stored in the event of an auxiliary power outage.

Self-tests and fail-safe position

Presentation

The reliability of a device is the property that allows its users to have well-placed confidence in the service it delivers.

For a Sepam protection relay, operational reliability consists of ensuring the safety and availability of the installation. This means avoiding the following 2 situations:

■ Nuisance tripping of the protection

Continuity of the electrical power supply is as vital for a manufacturer as it is for an electricity distribution company. Nuisance tripping caused by the protection can result in considerable financial losses. This situation affects the availability of the installation.

■ Failure of the protection to trip

The consequences of a fault that is not eliminated can be catastrophic. For safety of operation, the protection relay must detect faults in the power supply as quickly as possible, using discrimination. This situation affects the safety of the installation.

Self-tests and monitoring functions

On initialization and cyclically during operation, Sepam runs a series of self-tests. These self-tests are designed to detect any failure in its internal and external circuits so as to ensure Sepam's reliability. These failures are classified into 2 categories, major failures and minor failures:

■ A major failure reaches the hardware resources used by the protection functions (program memory and analog input for example).
This type of failure risks resulting in failure to trip on a fault or nuisance tripping. In this case, Sepam must go into the fail-safe position as quickly as possible.

■ A minor failure affects Sepam's peripheral functions (display, communication except for ACE969-2 and ACE850).
This type of failure does not prevent Sepam from protecting the installation and providing continuity of service. Sepam then operates in downgraded mode.

The classification of failures into 2 categories improves both safety and availability of the installation.

The possibility of a Sepam major failure must be taken into account when selecting the trip command type to maximize availability or safety of the installation (see "Selecting the trip command" page 267).

In addition to the self-tests, the user can activate monitoring functions to improve the installation monitoring:

■ VT supervision (ANSI code 60FL)
■ CT supervision (ANSI code 60)
■ Trip circuit and closing circuit supervision (ANSI code 74).

Self-tests

The self-tests are run when Sepam is initialized and/or during its operation.

List of self-tests which place Sepam in the fail-safe position

Failures which have caused this are deemed to be major ones.

Function	Test type	Execution period
Power supply		
	Power supply presence	During operation
CPU		
	Embedded software	During operation
	Processor	On initialization and during operation
	RAM memories	On initialization and during operation
Program memory		
	Checksum	On initialization and during operation
Parameter memory		
	Checksum	On initialization
Analog inputs		
	Acquisition consistency	During operation
	Infinite gain	During operation
Logic outputs		
	Relay driver	On initialization and during operation
Connection		
	CCA630, CCA634, CCA671	On initialization and during operation
	MES120	On initialization and during operation
	E Connector (phase voltage inputs, residual voltage and current inputs)	On initialization and during operation

List of self-tests which do not place Sepam in the fail-safe position

Failures which have caused this are deemed to be minor ones.

Function	Test type	Execution period
UMI		
	Module presence	On initialization and during operation
	Memory	On initialization
	Software	During operation
Analog output		
	Module presence	On initialization and during operation
Temperature inputs		
	Module presence	On initialization and during operation
Battery voltage		
	Minimum value check	During operation

Self-tests and fail-safe position

Fail-safe position

When Sepam is in working order, it runs self-tests continuously. Detection of a major failure places Sepam in the fail-safe position.

State of Sepam in the fail-safe position

- All the output relays are forced to the idle state
- All protection functions are inhibited
- The watchdog output indicates failure (output in the idle state)
- A red LED on the Sepam front panel is on and a diagnostic message appears on the Sepam display unit (see "Local indication" page 252).

How Sepam deals with failures

- Minor failure: Sepam switches to downgraded operation.

The failure is indicated on the Sepam display unit and also by the communication. Sepam continues to protect the installation.

- Major failure: Sepam switches to the fail-safe position and attempts a restart during which it again runs its self-tests. There are 2 possible scenarios:
  - The internal failure is still present. It is a permanent failure. Intervention on Sepam is required. Only removing the cause of the failure, followed by de-energizing and then energizing Sepam, will allow the unit to exit the fail-safe position.
  - The internal failure is no longer present. It is a transient failure. Sepam restarts so that it can continue to protect the installation. Sepam has been in the fail-safe position for 5 to 7 s.

DE80251

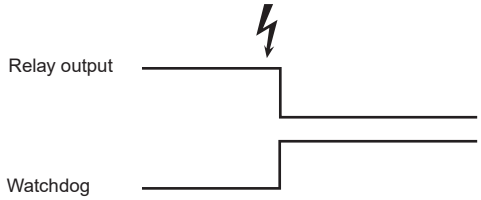

Permanent internal failure.

DE80252

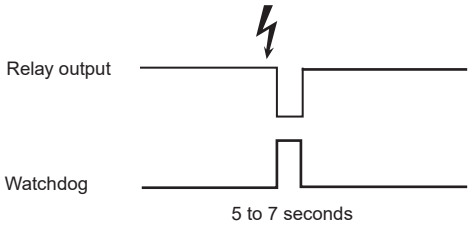

Transient internal failure.

DE80253

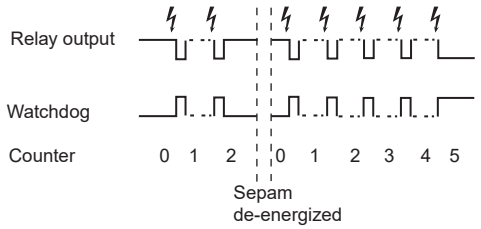

Repeated transient internal failures.

Limiting the number of transient failure detections

Each time a transient internal failure appears, Sepam increments an internal counter. The fifth time the failure occurs, Sepam is placed in the fail-safe position. De-energizing Sepam reinitializes the failure counter. This mechanism can be used to avoid keeping a Sepam running that is subject to repeated transient failures.

Selecting the trip command and examples of use

An analysis of the operational reliability of the whole installation should determine whether availability or safety of this installation should be prioritized if Sepam is in the fail-safe position. This information is used to determine the choice of trip command as outlined in the table below.

NOTICE

RISK OF UNPROTECTED INSTALLATION

Always connect the watchdog output to a monitoring device when the selected trip command does not result in the installation tripping when Sepam fails.

Failure to follow these instructions can result in equipment damage.

Selecting the trip command

Diagram	Control	Event	Trip	Advantage	Disadvantage
1	Shunt trip breaker or mechanical latching contactor	Sepam failure or loss of the auxiliary power supply	No	Availability of the installation	Installation not protected until remedial intervention (1)
2	Breaker with undervoltage trip coil (fail-safe)	Sepam failure or loss of the auxiliary power supply	Yes	Safety of the installation	Installation not available until remedial intervention
3	Breaker with undervoltage trip coil (not fail-safe)	Sepam failure	No	Availability of the installation	Installation not protected until remedial intervention (1)
		Loss of auxiliary power supply	Yes	Safety of the installation	Installation not available until remedial intervention
4	Contactor without coil latching (permanent order)	Sepam failure or loss of the auxiliary power supply	Yes	Safety of the installation	Installation not available until remedial intervention

***(1)** It is essential to use the watchdog, see the warning notice opposite.*

Example of use with shunt trip coil (diagram 1)

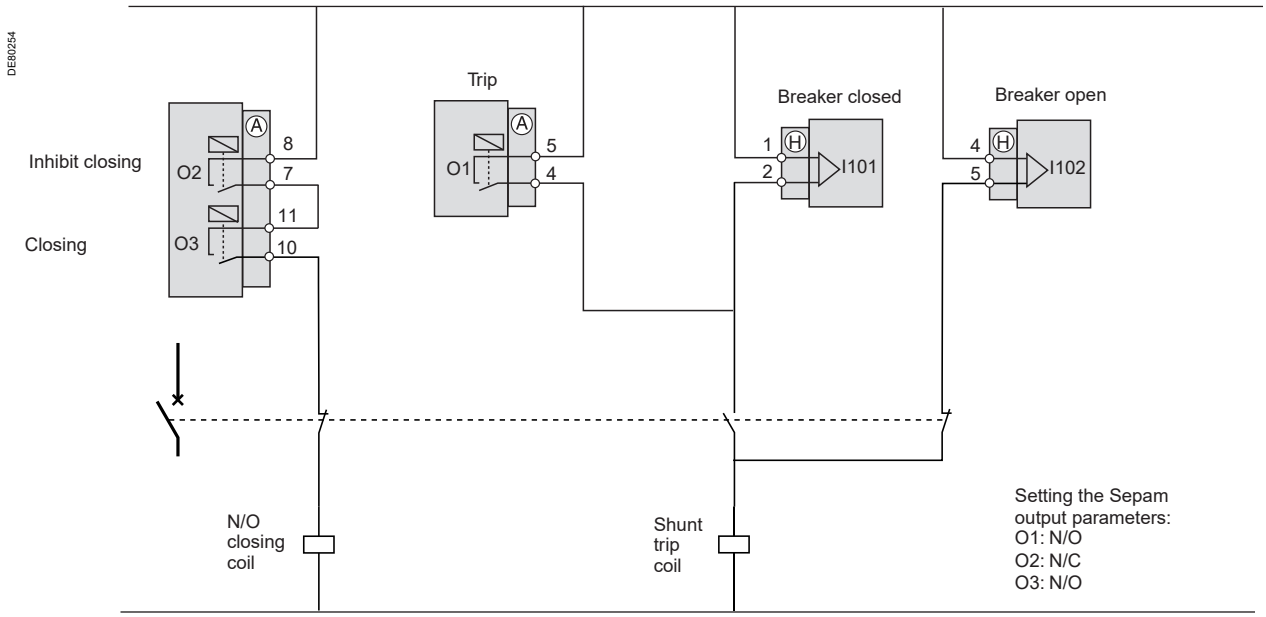

Example of use with undervoltage trip coil with fail-safe condition (diagram 2)

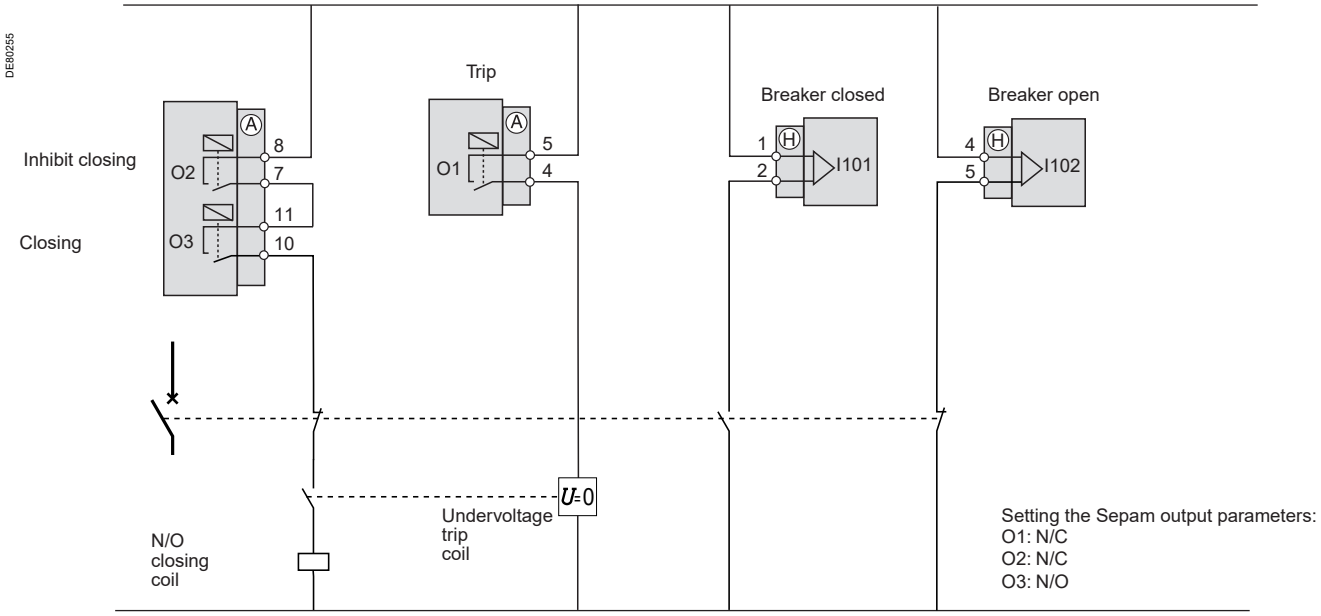

Example of use with undervoltage trip coil without fail-safe condition (diagram 3)

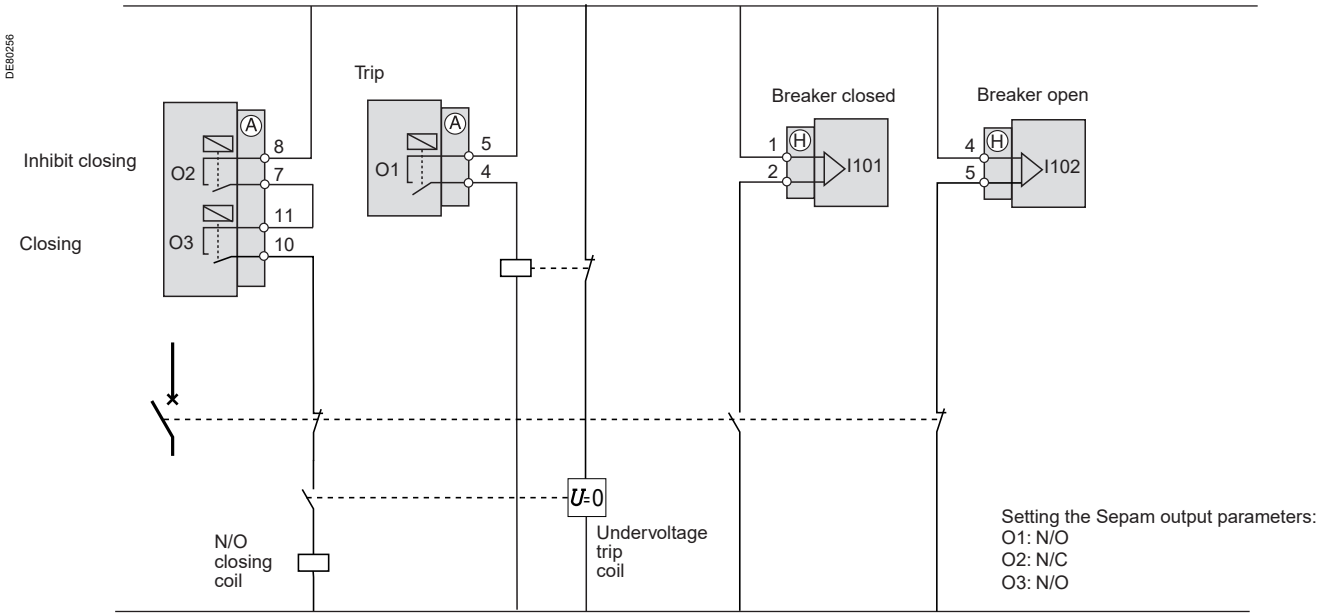

Example of use with contactor under permanent order command (diagram 4)

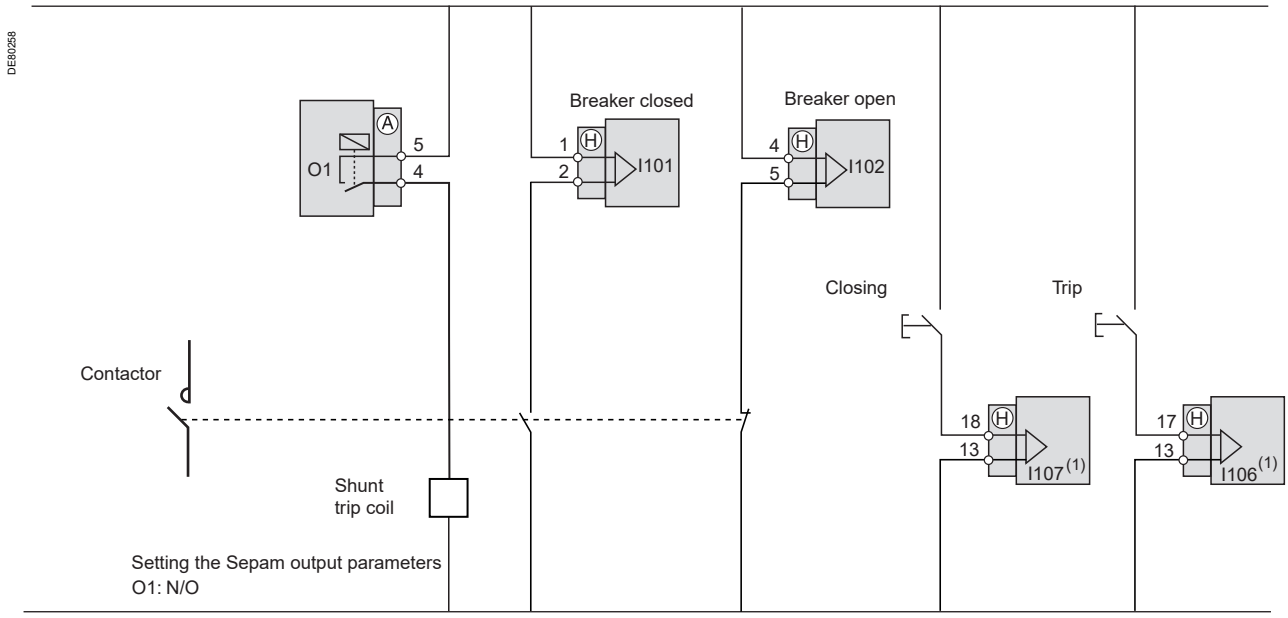

***(1)** Standard assignments, can be modified.*

Using the watchdog

The watchdog is extremely important in the monitoring system, as it indicates to the user that the Sepam protection functions are working correctly. When Sepam detects an internal failure, an LED flashes automatically on the Sepam front panel regardless of whether the watchdog output is connected correctly. If the watchdog output is not correctly connected to the system, this LED is the only way of knowing that Sepam has failed. We therefore strongly recommend connecting the watchdog output at the highest level of the installation so that an effective alarm is generated when necessary. For example, an audible alarm or flashing alarm lamp can be used to warn the operator.

Watchdog output status	No failure detected	Failure detected
Watchdog output connected correctly to the control system	The protection functions are in working order	■ The protection functions are not working. ■ Sepam is in the fail-safe position. ■ The Sepam alarm LED flashes. ■ The watchdog output activates a system alarm. ■ The operator is warned that he needs to intervene.
Watchdog output not connected	The protection functions are in working order	■ The protection functions are not working. ■ Sepam is in the fail-safe position. ■ The Sepam alarm LED flashes. ■ The need of maintenance is detected only if an operator controls the front panel of the digital relay.

Contents

Presentation **272**
Managing the Modbus protocol **273**
Configuring the communication interfaces **274**
Serial line communication 274
Ethernet communication 276
Commissioning and diagnosis **280**
Serial line communication 280
Ethernet communication 282
Data addresses and coding **287**
Addresses in direct-access mode **289**
Time-setting and synchronization **308**
Time-tagged events **310**
Transferring records **312**
Access to remote settings **315**
Customized table **317**
Security **318**
Reading Sepam identification **319**
Appendix 1. Modbus protocol **320**
Appendix 2. Function settings **325**

General

Modbus communication allows Sepam to be connected to a supervisor or any other device with a master Modbus communication channel.
Sepam is always a slave station.

Easergy Sepam series 60 is equipped with:
- 1 port C1 (COM1) to connect the serial communication interfaces,
- 1 port F to connect the Ethernet communication interfaces.

The interfaces to connect Sepam to a single serial network are the following:
- ACE949-2, for connection to a 2-wire RS 485 network
- ACE959, for connection to a 4-wire RS 485 network
- ACE937, for connection to a fiber-optic star network

The interfaces to connect Sepam to 2 serial networks are the following:
- ACE969TP-2, for connection to:
  - one 2-wire RS 485 Modbus S-LAN supervision communication network
  - one 2-wire RS 485 E-LAN engineering communication network
- ACE969FO-2, for connection to:
  - one fiber-optic Modbus S-LAN supervision communication network
  - one 2-wire RS 485 E-LAN engineering communication network

The interfaces to connect Sepam to an Ethernet network are the following:
- ACE850TP for copper electrical connection to the network
- ACE850FO for optical connection to the network.

Accessing Sepam data

Data available

Modbus communication provides access to many different functions, including:
- reading of metering and diagnosis information
- reading of status conditions and remote indications
- transfer of time-tagged events
- transfer of files such as disturbance recordings and tripping contexts and, for Easergy Sepam series 60, out-of-sync contexts, motor start reports, motor start trends and data logs
- viewing of protection settings
- reading of Sepam configuration and identification
- remote control of the analog output
- time-setting and synchronization.

The actual list depends on the application, the type of Sepam and the enabled functions.

Modbus communication also offers a number of additional functions (when enabled):
- transmission of remote controls
- modification of protection settings.

A password may be set up to protect access to these two functions.

Access modes

Depending on the data, two access modes are used:
- direct access - the data may be accessed directly in a single read or write operation
- indirect access - access requires a number of read and write operations, using a protocol that is specific to the data accessed.

Customized table

With Sepam, it is possible to set up for each Modbus port a customized sub-group of data for quick reading of the most significant information on the user application.

Compatibility with Sepam 2000

Even though Easergy Sepam series 60 offers many additional functions, it remains compatible with Sepam 2000 addresses and formats for most information.

Managing the Modbus protocol

Protocol operation

Modbus is used to exchange information between a master and one or more slave units, identified by a number. It implements request-reply dialog, where requests are always initiated by the master. Modbus exists in ASCII and binary (RTU mode) formats.

Data is exchanged in the form of 16-bit words (also called registers) or simply bits. Each piece of information (bit or register) has a 16-bit address.

A detailed description of the protocol is provided in the appendix. It may also be found at **www.modbus.org**.

Modbus functions

The Modbus protocol used by Easergy Sepam series 60 is a compatible sub-group of the RTU Modbus protocol.
The functions listed below are handled by Easergy Sepam series 60:
- basic functions (data access):
  - function 1: reading of n output or internal bits
  - function 2: reading of n input bits
  - function 3: reading of n output or internal words
  - function 4: reading of n input words
  - function 5: writing of 1 bit
  - function 6: writing of 1 word
  - function 7: high-speed reading of 8 bits
  - function 15: writing of n bits
  - function 16: writing of n words.
- communication-management functions:
  - function 8: Modbus diagnosis
  - function 11: reading of Modbus event counter
  - function 43: sub-function 14: reading of identification.
- enhanced functions:
  - function 102: secure access.

The following exception codes are supported:
- 1: unknown function code
- 2: incorrect address
- 3: incorrect data
- 4: not ready (cannot process request)
- 7: not acknowledged (remote reading and setting in particular).

Multi-master operation

Serial line Modbus operation

When Sepam units are connected via a gateway to a multiple-access network (Ethernet, Modbus+, etc.), a number of masters may address the same unit via the serial communication port.
The serial line Modbus protocol cannot manage this type of architecture. The network designer is responsible for avoiding collisions.
- For direct-access data, in general, no particular precautions must be taken.
- For indirect-access data, Sepam provides two exchange zones, making possible 2 simultaneous, independent accesses by 2 different masters.

Modbus over TCP/IP operation

The ACE850 accepts up to 8 simultaneous Modbus/TCP connections.
Sepam accepts the Unit-Id 255 or any value in the range 1-247.
If several clients are accessing indirect-access data, they must make proper use of the two exchange zones provided. No access synchronization is provided by Sepam units.

Performance

The typical response time (time between the end of request reception and sending the reply) is less than 10 milliseconds for 90% of exchanges.
It may occasionally be longer, but not exceed 150 ms.
In indirect mode, the time needed between the request (or an acknowledgment) and the availability of the corresponding data is linked to the Sepam low-priority cycle time and may vary from a few dozen to several hundred milliseconds.

Configuring the communication interfaces
Serial line communication

PE80776

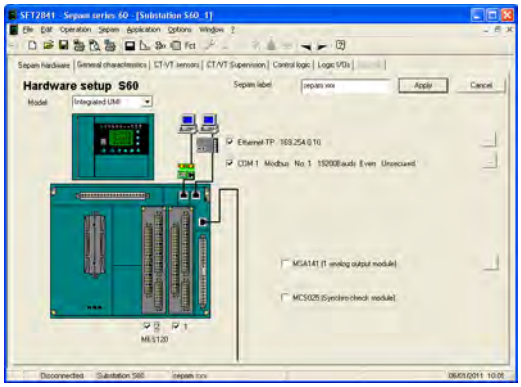

SFT2841: Sepam configuration screen.

Access to configuration parameters

The Sepam communication interfaces must be configured using SFT2841 software. The configuration parameters can be accessed from the Communication configuration window in the SFT2841 software.
To access this window:
- open the **Sepam configuration** window in SFT2841
- check the COM1 box
- click on the relevant button ... : the **Communication configuration** window appears
- select the type of interface used: ACE949/ACE959/ACE937, ACE969TP or ACE969FO
- select the Modbus communication protocol.

The configuration parameters will vary depending on the communication interface selected: ACE949/ACE959/ACE937, ACE969TP or ACE969FO. The table below specifies the parameters to be configured depending on the communication interface chosen.

Parameters to be configured	ACE949 ACE959 ACE937	ACE969TP	ACE969FO
Physical layer parameters	■	■	■
Fiber-optic parameters			■
Advanced Modbus parameters	■	■	■
E-LAN parameters		■	■

PE50561

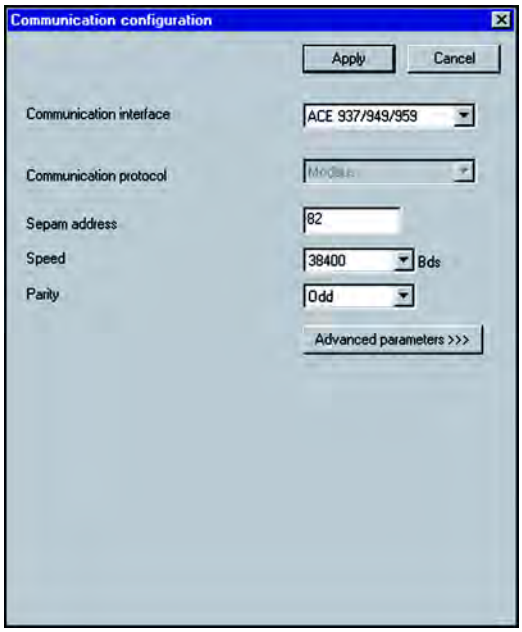

SFT2841: communication configuration window for ACE949.

Configuring the physical layer of the Modbus port

Asynchronous serial transmission is used with the following character format:
- 1 start bit
- 8 data bits
- 1 stop bit
- parity according to parameter setting.

The number of stop bits is always fixed at 1.
If a configuration with parity has been selected, each character will contain 11 bits: 1 start bit + 8 data bits + 1 parity bit + 1 stop bit.
If a no parity configuration has been selected, each character will contain 10 bits: 1 start bit + 8 data bits + 1 stop bit.

The configuration parameters for the physical layer of the Modbus port are as follows:
- slave number (Sepam address)
- transmission speed
- parity check type.

Parameters	Authorized values	Default value
Sepam address	1 to 247	1
Speed	4800, 9600, 19200 or 38400 bps	19200 bps
Parity	No parity, even or odd	Even

Configuring the ACE969FO-2 fiber-optic port

The configuration for the physical layer of the ACE969FO-2 fiber-optic port is completed with the following 2 parameters:
- link idle state: light-on or light-off
- echo mode: with or without.

Fiber-optic parameters	Authorized values	Default value
Link idle state	Light Off or Light On	Light Off
Echo mode	Yes (fiber-optic ring) or No (fiber-optic star)	No

Note: *in echo mode, the Modbus master will receive the echo of its own request before the slave's reply. The Modbus master must be able to disregard this echo. Otherwise, it is impossible to create a Modbus fiber-optic ring.*

Configuring the communication interfaces
Serial line communication

PE50559

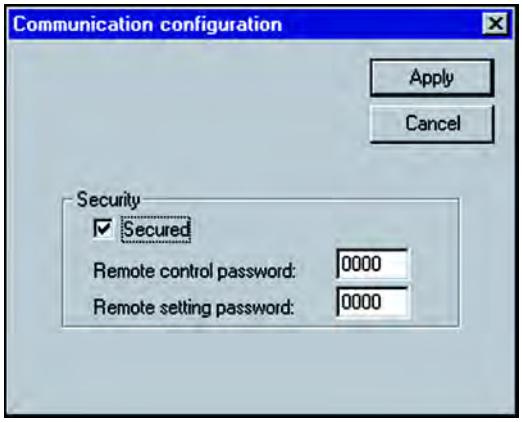

Modbus Advanced parameters window.

Configuring Modbus advanced parameters

With Easergy Sepam series 60, remote controls and remote settings can be protected by a password.
Advanced parameters can be used to configure the security function by:
- activating the function
- entering the password for the remote controls
- entering the password for the remote settings.

Advanced parameters	Authorized values	Default value
Security function	On/Off	Off
Remote controls password	4-digit code	0000
Remote settings password	4-digit code	0000

PE50560

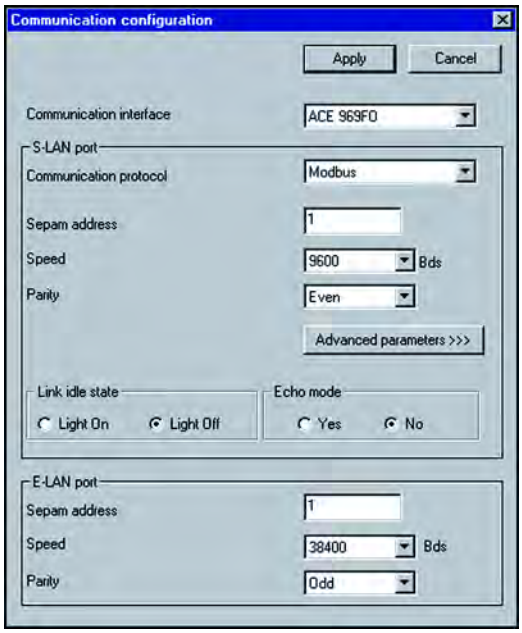

Communication configuration window for ACE969FO.

Configuring the physical layer of the ACE969-2 E-LAN port

The E-LAN port on the ACE969TP-2 and ACE969FO-2 communication interfaces is a 2-wire RS 485 port.
The configuration parameters for the physical layer of the E-LAN port are:
- Sepam address
- transmission speed
- parity check type.

The number of stop bits is always fixed at 1.
If a configuration with parity has been selected, each character will contain 11 bits: 1 start bit + 8 data bits + 1 parity bit + 1 stop bit.
If a no parity configuration has been selected, each character will contain 10 bits: 1 start bit + 8 data bits + 1 stop bit.

Parameters	Authorized values	Default value
Sepam address	1 to 247	1
Speed	4800, 9600, 19200 or 38400 bps	38400 bps
Parity	No parity, even or odd	Odd

Configuration tips

- The Sepam address MUST be assigned before Sepam is connected to the communication network.
- You are also strongly advised to set the other physical layer configuration parameters before connecting to the communication network.
- Modifying the configuration parameters during normal operation will not disturb Sepam but will reset the communication port.

Configuring the communication interfaces
Ethernet communication

PE80776

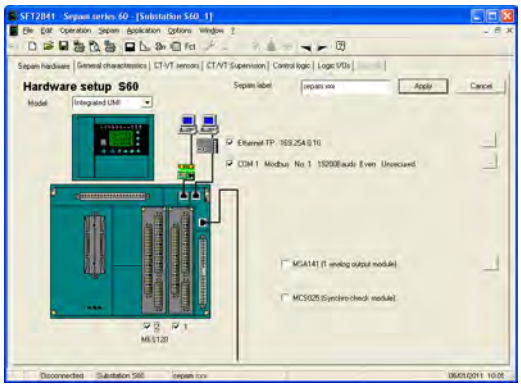

SFT2841: Sepam configuration screen.

Access to configuration parameters

The Sepam communication interfaces must be configured using SFT2841 software. The configuration parameters can be accessed from the Communication configuration window in the SFT2841 software.
To access this window:
- open the **Sepam configuration** window in SFT2841
- select the Ethernet communication port
- click on the relevant button ... : the **Communication configuration** window appears
- select the type of interface used: ACE850TP or ACE850FO.

Configuring an ACE850 involves:
- configuring the standard Ethernet parameters (mandatory)
- configuring one or more of the following sets of advanced optional parameters:
  - SNMP: Ethernet network management
  - SNTP: time synchronization
  - IP filtering: access control
  - RSTP: Ethernet ring management
  - User accounts: access control.

PE80395

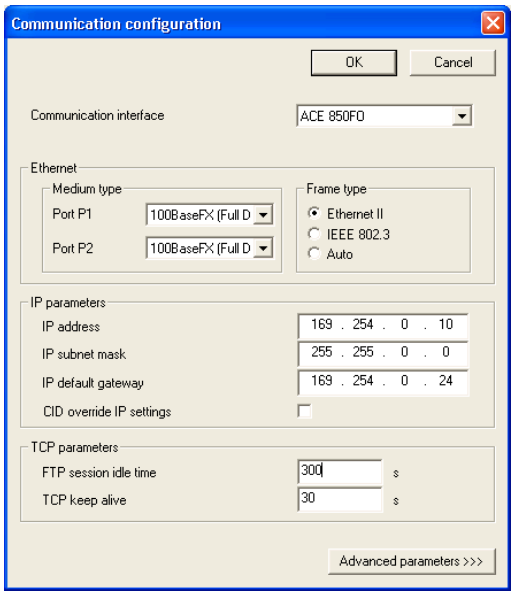

SFT2841 : Ethernet and TCP/IP communication configuration screen.

Ethernet and TCP/IP configuration

Before configuring the ACE850, obtain a unique static IP address, subnet mask, and default gateway address from the network administrator. See the section on IP address and parameter guidelines, page 279.

Parameters	Description	Authorized values
Frame format	Used to select the format for data sent over an Ethernet connection.	Ethernet II, 802.3, Auto **Default**: Ethernet II
Media type	Used to define the physical Ethernet connection.	ACE850TP ■ 10T/100Tx Auto ■ 10BaseT-HD ■ 10BaseT-FD ■ 100BaseTX-HD ■ 100BaseTX-FD **Default**: 10T/100Tx Auto
		ACE850FO ■ 100BaseFX-HD ■ 100BaseFX-FD **Default**: 100BaseFX-FD
IP address	Used to enter the static IP address of the ACE850.	0.0.0.0 to 255.255.255.255 **Default**: 169.254.0.10
Subnet mask	Used to enter the subnet mask of your network.	0.0.0.0 to 255.255.255.255 **Default**: 255.255.0.0
Default gateway	Used to enter the default gateway (router) IP address used for wide area network (WAN) communications.	0.0.0.0 to 255.255.255.255 **Default**: 0.0.0.0
Allow CID file to override IP parameters	This option is irrelevant when only Modbus communication is used.	**Default**: not checked
Keep alive	Timeout value used to test for session disconnection.	1 to 60 seconds **Default**: 30 seconds
FTP session inactivity timeout	Timeout value used to force disconnection of an inactive FTP session	30 to 900 seconds **Default**: 30 seconds

Duplicate IP address detection

The ACE850 IP address must be unique in the network. If it is not unique, the Status LED repeats a four blink-pause pattern and a new IP address must be assigned to the ACE850 or to the conflicting device.

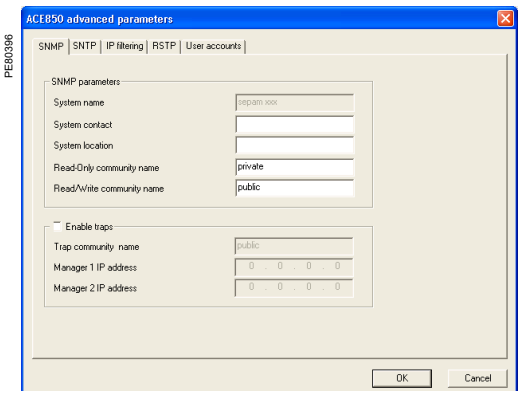

SFT2841: SNMP configuration.

SNMP configuration

The ACE850 supports SNMP V1, allowing a network administrator to remotely access it with an SNMP manager and view the network status and diagnostics in the MIB2 format (only a subset of MIB2 is implemented).
Additionally, the ACE850 may be configured to send SNMP traps in the following cases:

- ACE850 start/restart
- Link up
- Link down
- Authentication failure.

Parameters	Description	Authorized values
System Name	This parameter is the same as the Sepam label.	Not modifiable from this screen.
System Contact	Name of the administrative contact	String (< 16 characters) **Default**: empty string
System Location	Location of the Sepam/ACE850	String (< 16 characters) **Default**: empty string
Read-only Community Name	SNMP community that has read-only access to the MIB. Acts as a password.	String (< 16 characters) **Default**: "public"
Read-write Community Name	SNMP community that has read-write access to the MIB. Acts as a password.	String (< 16 characters) **Default**: "private"
Enable traps	Checking this check box enables SNMP to send traps.	**Default**: "not checked"
Traps Community Name	SNMP community that is used with traps.	String (< 16 characters) **Default**: "public"
Manager 1 IP address	IP address of the SNMP manager to which traps are sent.	0.0.0.0 to 255.255.255.255 **Default**: 0.0.0.0
Manager 2 IP address	IP address of a second SNMP manager to which traps are sent.	0.0.0.0 to 255.255.255.255 **Default**: 0.0.0.0

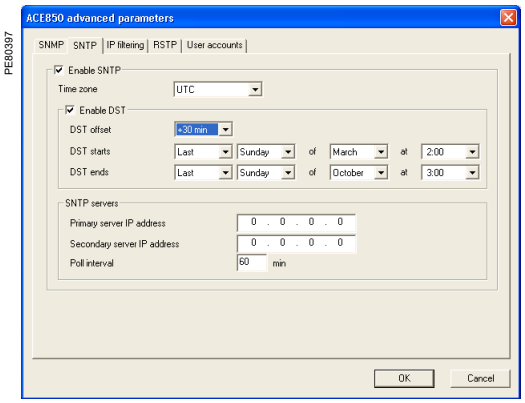

SFT2841: SNTP configuration.

SNTP configuration

SNTP is a time synchronization protocol that can be used to synchronize the Sepam. SNTP is used in mode 3-4 (unicast mode).

- If SNTP is used, the synchronization source for Sepam must be defined as Ethernet.
- If SNTP is not used, the Sepam synchronization must be ensured by other means (Modbus frames, synchronization tops).

Parameters	Description	Authorized values
Enable SNTP	Enables the time and date of the Sepam to be set by the Simple Network Time Protocol (SNTP) server.	**Default**: not enabled
Time Zone Offset	Determines the difference between local time and Coordinated Universal Time (UTC) (same as GMT).	UTC-12 to UTC+14 **Default**: UTC
Enable Daylight Saving Time	Enables the use of Daylight Saving Time (Summer time).	**Default**: not enabled
DST offset	Difference between standard time and Daylight Saving Time.	+ 30 or + 60 minutes **Default**: + 60 minutes
DST starts	If enabled, DST starts on the selected date.	**Default**: last Sunday of March
DST ends	If enabled, DST ends on the selected date.	**Default**: last Sunday of October
Primary Server IP Address	The IP address of the SNTP server the ACE850 contacts to get the time message.	0.0.0.0 to 255.255.255.255 **Default**: 0.0.0.0
Secondary Server IP Address	The IP address of another SNTP server the ACE850 contacts in case the primary server is down.	0.0.0.0 to 255.255.255.255 **Default**: 0.0.0.0
Poll Interval	Controls how often the ACE850 contacts the SNTP server for the correct time.	1 to 300 minutes **Default**: 60 minutes

IP filtering configuration

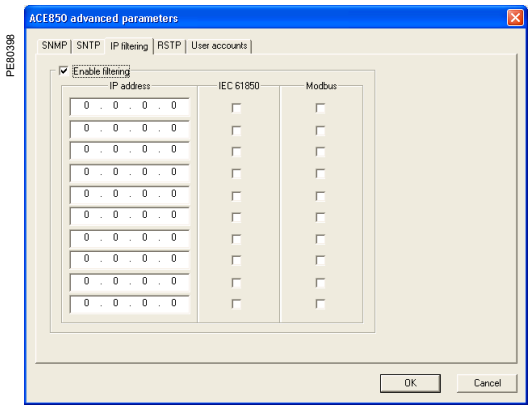

SFT2841: IP filtering configuration.

The IP filtering function allows the administrator to specify which Modbus/TCP clients and which IEC 61850 clients have access to the ACE850 services.

***Note:** if IP filtering is enabled, access is forbidden to any client not in the filtered list.*

Parameters	Description	Authorized values
Enable filtering	Check this box to activate filtering based on IP addresses.	**Default**: not enabled
IP address	The IP address of a client for which filtering options are defined.	0.0.0.0 to 255.255.255.255 **Default**: 0.0.0.0
IEC 61850	Check this box to grant IEC 61850 access to the given IP address.	**Default**: not checked
Modbus	Check this box to grant Modbus/TCP access to the given IP address.	**Default**: not checked

RSTP configuration

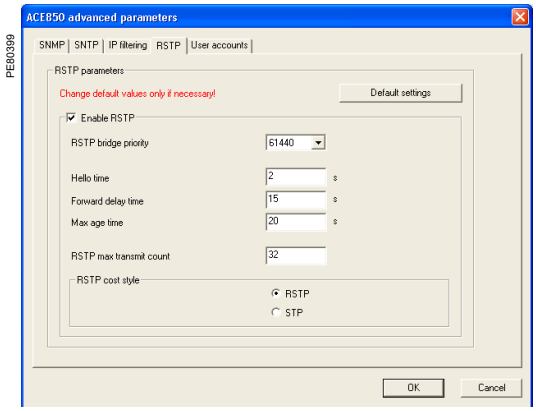

SFT2841: RSTP configuration.

The RSTP protocol enables the use of redundant Ethernet architectures such as rings.
It must be enabled each time the ACE850 is included in a loop. It may be disabled in other cases.
Changing the default settings is normally not required and should be performed with extreme care as it could jeopardize the stability of the Ethernet network.
If in doubt, it is always possible to revert to the default values using the Default settings button.

Parameters	Description	Authorized values
Enable RSTP	Check this box to activate the use of the RSTP protocol.	**Default**: enabled
RSTP bridge priority	Priority of the RSTP bridge. The bridge with the lowest priority becomes root.	0 - 61440, by steps of 4096 **Default**: 61440
Hello time	Amount of time between the transmission of configuration messages	1 to 10 seconds **Default**: 2 seconds
Forward delay time	Time value to control how fast a port changes its spanning state when moving towards the forwarding state	4 to 30 seconds **Default**: 21 seconds
Max age time	Valid duration of configuration message once sent by the root bridge	6 to 40 seconds **Default**: 40 seconds
Max transmit count	Maximum BPDUs that can be transmitted by the Port Transmit state machine in any Hello time. This value limits the maximum transmission rate.	3 to 100 **Default**: 32
RSTP cost style	RSTP (32 bits) or STP (16 bits) cost style selection	**Default**: RSTP

***Note:** RSTP parameters must verify the following relationships:*
- *2 x (Forward_delay_time - 1 second) ⩾ Max_age_time*
- *Max_age_time ⩾ 2 x (Hello_time + 1 second).*

Configuring the communication interfaces
Ethernet communication

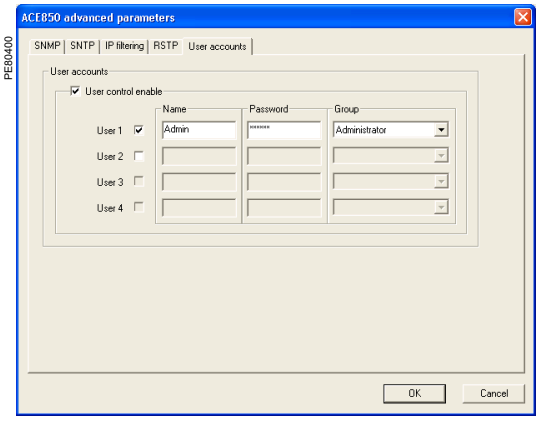

SFT2841: User accounts configuration.

User accounts configuration

ACE850 users are assigned usernames and passwords used to gain access to the FTP or WEB servers. Each user belongs to a group which determines the user's access rights:

- Administrator: read-write access to the FTP server, access to the WEB server
- Operator: read-only access to the FTP server, access to the WEB server
- Guest: no access to the FTP server, access to the WEB server

Up to 4 user accounts can be defined.

Parameters	Description	Authorized values
User control enable	Check this box to enable the configuration of users account. Currently, the ACE850 will not operate if this box is not checked. Ensure that this box is always checked.	**Default**: enabled
User n	Check this box to create this user account. Uncheck it to delete the account (only the last account in the list can be deleted).	**Default**: user 1 enabled Users 2 to 4 disabled
Name	User name	String (1 to 8 characters)
Password	User password	String (4 to 8 characters)
Group	Group to which the user belongs	Administrator, Operator, Guest

The following account is always created by default as user 1:

- Name: Admin
- Password: ACE850
- Group: Administrator

IP address and parameter guidelines

IP addresses

Several configuration parameters are IP addresses. These addresses must follow precise rules which are enforced by SFT2841 and ACE850. These rules are:

- Every IP address is made of 4 fields separated by dots: x . y . z . t
- Each field is a decimal value coded on 8 bits (range [0..255]).
- The first field (x) must be in the range [1..224] but must not be 127.
- Intermediate fields can cover the full range [0..255].
- The last field must not be 0 (range [0..255]).

IP subnet mask

The IP subnet mask is also made of 4 dot separated fields:

- The binary representation of the subnet mask is made of a set of 8 to 30 contiguous ones in the most significant part, followed by a set of contiguous zeroes (255.0.0.0 to 255.255.255.252).
- For a class A IP address ($x \leqslant 126$), the number of ones in the subnet mask must be at least 8 (255.y.z.t).
- For a class B IP address ($128 \leqslant x \leqslant 191$), the number of ones in the subnet mask must be at least 16 (255.255.z.t).
- For a class C IP address ($192 \leqslant x \leqslant 223$), the number of ones in the subnet mask must be at least 24 (255.255.255.t).
- The subnet part of the device IP address, obtained when applying the subnet mask, must not be 0.

IP default gateway

- An IP address of 0.0.0.0 means no gateway.
- If a gateway is defined, it must belong to the same subnet as the device.

Installing the communication network

Preliminary study

According to the installation characteristics and constraints, a technical study must first determine the communication network requirements, including:

- the type of medium (electrical or fiber optic)
- the number of Sepam units per network
- the transmission speed
- the ACE interfaces configuration
- the Sepam parameter settings.

Sepam operating instructions

Communication interfaces must be installed and connected in accordance with the Installation chapter of this manual.

Preliminary checks

Perform the following:

- check the CCA612 cord connection between the ACE interface and the Sepam base unit
- check the ACE Modbus communication port connection
- check the complete configuration of the ACE
- for the ACE969, check the auxiliary power supply connection.

PE80777

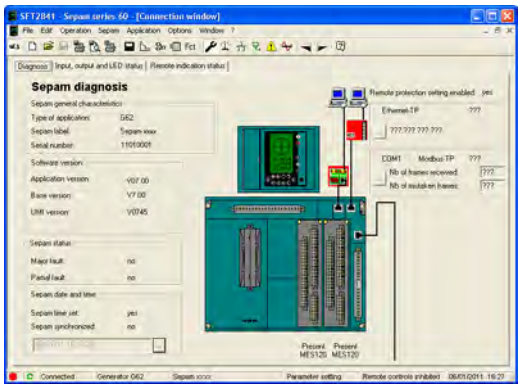

SFT2841: Easergy Sepam series 60 diagnosis screen.

Checking the operation of the ACE interface

You can use the following to check that an ACE interface is operating correctly:

- the indicator LEDs on the front panel of the ACE
- the information provided by the SFT2841 software connected to Sepam:
  - on the Diagnosis screen
  - on the Communication configuration screens.

Link activity LED for ACE949-2, ACE959 and ACE937

The link activity LED for ACE949-2, ACE959 and ACE937 interfaces flashes when Sepam transmission or reception is active.

Indicator LEDs on the ACE969

- green "on" LED: ACE969 energized
- red "key" LED: ACE969 interface status:
  - LED off: ACE969 configured and communication operational
  - LED flashing: ACE969 configuration error or ACE969 not configured
  - LED on: ACE969 error
- S-LAN and E-LAN Tx/Rx LEDs:
  - Tx flashing: Sepam transmitting
  - Rx flashing: Sepam receiving
  - Tx and Rx off: RS 485 communication is idle
  - Tx or Rx LED on while the RS485 communication network is idle: the idle state voltage of the RS485 network is incorrect.

PE80417

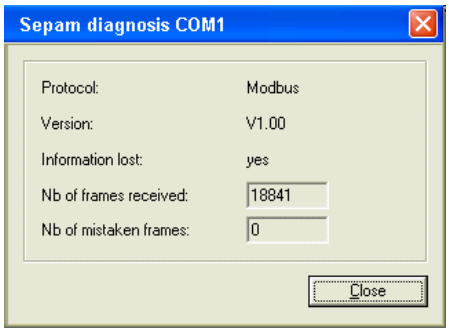

SFT2841: Communication diagnosis.

Diagnosis using SFT2841 software

Sepam diagnosis screen

When connected to Sepam, the SFT2841 software informs the operator of the general Sepam status and of the Sepam communication status in particular.
The Sepam diagnosis screen displays Sepam status information. You can get detailed status information about each communication channel using buttons on the screen.

Sepam communication diagnosis

The operator is provided with the following information to assist with identifying and resolving communication problems:

- name of the protocol configured
- Modbus interface version number
- number of valid frames received (CPT9)
- number of invalid (mistaken) frames received (CPT2).

Link activity LED

The ACE interface link activity LEDs are activated by variations in the signal on the Modbus network. When the supervisor communicates with Sepam (during transmission or reception), these LEDs flash.
After wiring, check the information given by the link activity LEDs when the supervisor operates.

Note: *flashing indicates that there is traffic passing to or from Sepam; it does not mean that the exchanges are valid.*

Functional test

If there is any doubt about correct operation of the link:
- run read/write cycles in the test zone
- use Modbus diagnosis function 8 (sub-code 0, echo mode).

The Modbus frames below, transmitted or received by a supervisor, are an example of a test performed when communication is implemented.

Test zone		
Read	Transmission	01 03 0C00 0002 C75B
	Reception	01 03 04 0000 0000 FA33
Write	Transmission	01 10 0C00 0001 02 1234 6727
	Reception	01 10 0C00 0001 0299
Read	Transmission	01 03 0C00 0001 B75A
	Reception	01 03 02 1234 B539
Function 8 - Modbus diagnosis, echo mode		
Transmission		01 08 0000 1234 ED7C
Reception		01 08 0000 1234 ED7C

Even in echo mode, Sepam recalculates and checks the CRC sent by the master:
- if the CRC received is valid, Sepam replies
- if the CRC received is invalid, Sepam does not reply.

Modbus diagnosis counters

Counter definition

Sepam manages the Modbus diagnosis counters. These are:
- **CPT1**: Number of valid frames received, whether the slave is involved or not
- **CPT2**: Number of frames received with a CRC error or physical error (frames with more than 255 bytes, frames received with at least one parity, overrun, framing or line-break error)
- **CPT3**: Number of exception responses generated (even if not transmitted, due to receipt of a broadcast request)
- **CPT4**: Number of frames specifically addressed to the station (excluding broadcasting)
- **CPT5**: Number of valid broadcast frames received
- **CPT6**: Not significant
- **CPT7**: Not significant
- **CPT8**: Number of frames received with at least one character having a physical error (parity, overrun, framing or line break)
- **CPT9**: Number of valid requests received and correctly executed.

Counter reset

The counters are reset to 0:
- when they reach the maximum value FFFFh (65535)
- when they are reset by a Modbus command (function 8)
- when Sepam auxiliary power is lost
- when communication parameters are modified.

Using the counters

Modbus diagnosis counters help to detect and resolve communications problems. They can be accessed by the dedicated read functions (Modbus protocol functions 8 and 11).
The CPT2 and CPT9 counters can be displayed on SFT2841
("Sepam Diagnosis" screen).
An incorrect speed (or parity) increments CPT2.
Non-reception is signaled by the lack of change on CPT9.

Operating anomalies

It is advisable to connect the Sepam units to the Modbus network one by one. Make sure that the supervisor is sending frames to the relevant Sepam by checking the activity on the RS 232 - RS 485 converter or the fiber-optic converter if there is one, and on the ACE module.

RS 485 network
- check the wiring on each ACE module
- check the tightness of the screw terminals on each ACE module
- check the connection of the CCA612 cord linking the ACE module to the Sepam base unit
- check that polarization is only at one point and that impedance matching is at both ends of the RS 485 network
- check the auxiliary power supply connection to the ACE969TP-2
- check that the ACE909-2 or ACE919 converter used is connected, powered and set up correctly.

Fiber-optic network
- check the connections on the ACE module
- check the connection of the CCA612 cord linking the ACE module to the Sepam base unit
- check the auxiliary power supply connection to the ACE969FO-2
- check that the converter or fiber-optic star used is correctly connected, powered and configured
- for a fiber-optic ring, check that the Modbus master can correctly handle the echo of its requests.

In all cases
- check all the ACE configuration parameters on SFT2841
- check the CPT2 and CPT9 diagnostic counters on SFT2841
("Sepam Diagnosis" screen).

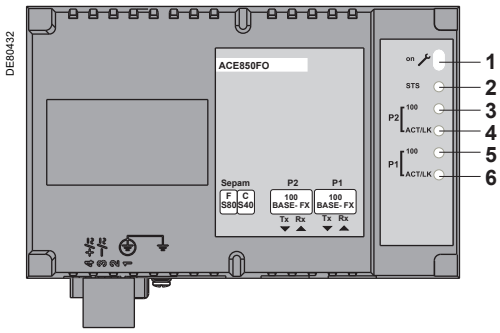

ACE850 communication interface.

Installing the Ethernet network

Preliminary study

According to the installation characteristics and constraints, a technical study must first determine the Ethernet network requirements, including:
- the network topology
- the various subnets (if any) and their interconnections
- the IP addressing scheme

Sepam operating instructions

Communication interfaces must be installed and connected in accordance with the instructions of the Installation chapter of this manual and with the instruction sheet delivered with each ACE850 communication interface (reference BBV35290).

Preliminary checks

Perform the following actions:
- check the CCA614 cord connection between the ACE850 interface and the Sepam base unit
- check the connection of the ACE850 to the Ethernet network
- check the auxiliary power supply connection
- check the complete configuration of the ACE850.

Checking the operation of the ACE850 interface

You can use the following to check that an ACE850 interface is operating correctly:
- the indicator LEDs on the front panel of the ACE850
- the information provided by the SFT2841 software connected to Sepam
- the Web pages embedded inside the ACE850.

Basic diagnostics

Diagnosis using indicator LEDs on the ACE850

1 On/fault indicator. This indicator has the following states:
- Off: the ACE850 interface is not powered
- steady red: the ACE850 is initializing or is faulty
- blinking red: the ACE850 is unable to establish communication with the Sepam base unit, or the ACE850 is not properly configured
- steady green: the ACE850 is operating correctly
- fast blinking green: indicates a transient state which occurs at startup when IEC 61850 communication is also used
- steady green and blinking red: communication with the base unit has been lost. This can indicate a normal situation due to a restart of the Sepam after parameters have been downloaded. The ACE850 automatically resumes normal operation in a few seconds.

This status can also indicate an error condition, in which case, ACE850 restarts automatically within 15 seconds and try to re-establish connection.

2 Status indicator. This indicator has the following states:
- Off: the Ethernet communication is not started
- steady green: the Ethernet communication is correctly operating
- three blinks pattern: no logical Ethernet link
- four blinks pattern: duplicate IP address
- six blinks pattern: invalid IP configuration.

3 and **5** Speed indicators. These indicators have the following states:
- Off: the corresponding physical link is down or the port speed is 10Mbps
- On: the corresponding port operates at 100Mbps.

4 and **6** Link/Activity indicators. These indicators have the following states:
- Off: the corresponding physical link is not established
- On: the corresponding physical link is established
- blinking: the indicator blinks with the activity on the link.

PE80777

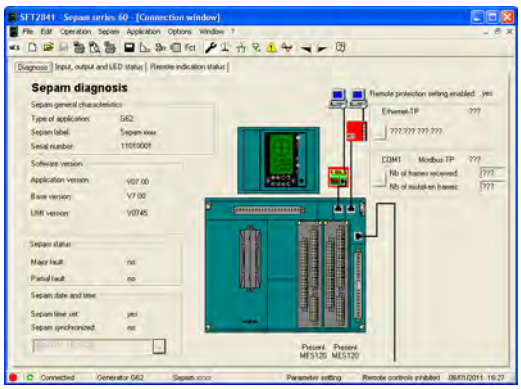

SFT2841: Sepam diagnosis screen.

Diagnosis using SFT2841 software

When connected to Sepam, the SFT2841 software informs the operator of the general Sepam status and of the Sepam communication status in particular.
Sepam status information appears on the Sepam diagnosis screen on which buttons can be used to obtain detailed status information on each communication channel.
The Sepam diagnosis screen can be used to check that the Sepam base unit and the ACE850 interface are correctly connected:

PE80405

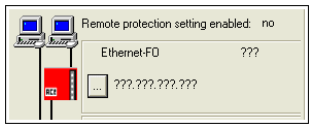

Diagnosis screen detail:
ACE850 not or improperly connected.

PE80406

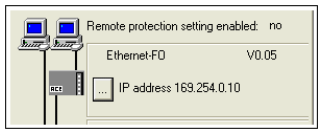

Diagnosis screen detail:
ACE850 connected properly.

PE80402

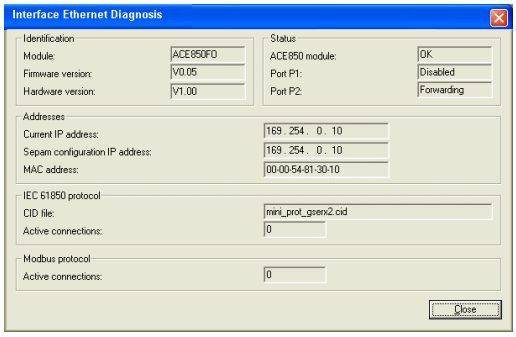

SFT2841: Ethernet diagnosis screen.

The Ethernet diagnosis screen can be used to check:
- the ACE850 module status. The ACE850 status is OK if the ACE850 validates its configuration.
- the communication ports status
- the current ACE850 IP address. If the current IP address is different from the one configured, this could mean that the configured address is not valid, unless the IEC 61850 protocol is also being used.

PE80645

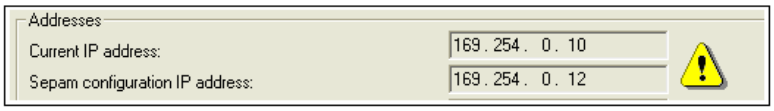

Advanced diagnostics using the embedded Web server

The advanced diagnostics feature is only available when it is possible to establish an Ethernet connection with the ACE850. If not, the basic diagnostics must be used to solve the problems.

Accessing the ACE850 Web server

1. Start your web browser (Internet explorer 6.0 or higher, Mozilla Firefox for example).
2. In the address text box, type the address of the ACE850 (`169.254.0.10` is the default), then press **Enter**.
3. In the login window, type your username and password (default is `Admin`, `ACE850`).
4. From the left side menu, choose the language for the current session.
5. From the menu, click **Diagnostics** to access the diagnostics menu.

PE80403



ACE850 home page.

Diagnostics Web pages

There are two general diagnostics pages dealing with Ethernet operation:
- Ethernet global statistics
- Ethernet port statistics

There is also a set of protocol dedicated diagnostic pages:
- Modbus statistics
- IEC 61850 statistics (not covered in this manual)
- SNMP statistics
- SNTP statistics
- RSTP statistics

Diagnostic pages are automatically refreshed every 5 seconds (approximately).

PE80404

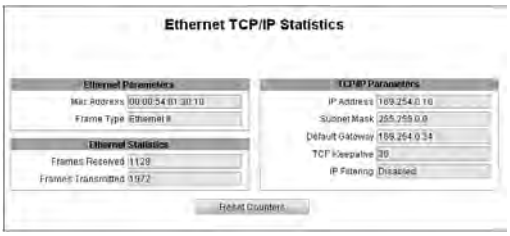

ACE850 Ethernet TCP/IP statistics.

PE80407

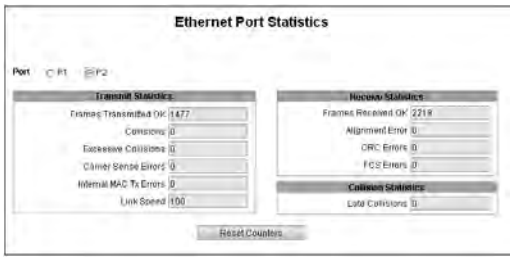

ACE850 Ethernet port statistics.

Ethernet TCP/IP statistics

Item	Description
Mac address	Unique Ethernet hardware address of the ACE850
Frame type	Value of the frame type configured with SFT2841
TCP/IP parameters	Parameter values configured with SFT2841
Frames received	Total number of received Ethernet frames, regardless of port or protocol
Frames transmitted	Total number of transmitted Ethernet frames, regardless of port or protocol
Reset Counters button	Button to reset the Ethernet counters

Ethernet port statistics

Item	Description
Port P1/P2 buttons	Selection of the port of which statistics are displayed
Frames transmitted OK	A counter that increments each time a frame is successfully transmitted.
Collisions	A counter that increments each time a frame is retransmitted due to collision detection.
Excessive collisions	A counter that increments each time a frame cannot be sent because it has reached the maximum collision status based on the Truncated Binary Exponential Backoff algorithm.
Carrier sense errors	A counter that increments each time there is a collision because carrier sense is disabled.
Internal MAC Tx errors	A counter that increments for every transmission error that is not caused by late, excessive, or carrier sense collisions.
Link speed	Actual link speed
Frames received OK	A counter that increments each time a frame is successfully received.
Alignment errors	A counter that increments each time a received frame has an FCS error and does not end on an 8-bit frame boundary.
CRC errors	A counter that increments each time a received frame has a CRC or an alignment error.
FCS errors	A counter that increments each time a received frame has a FCS or an alignment error.
Late collisions	A counter that increments each time a collision occurs after the slot time (512 bits starting at the preamble).
Reset counters button	Button to reset the port counters

PE80408

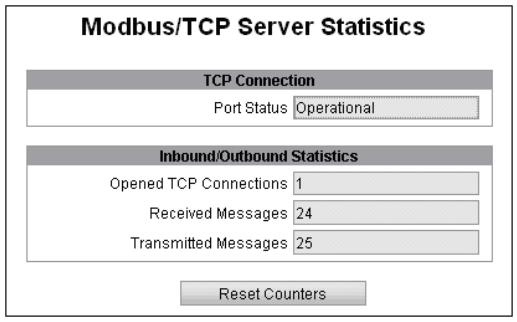

ACE850 Modbus/TCP server statistics.

Modbus/TCP server statistics

Item	Description
Port status	Modbus port status
Opened TCP connections	Number of Modbus clients currently connected
Received messages	Total number of Modbus requests
Transmitted messages	Total number of Modbus responses
Reset counters button	Button to reset the messages counters

Note: *the Web interface uses one Modbus connection to operate.*

PPE80409

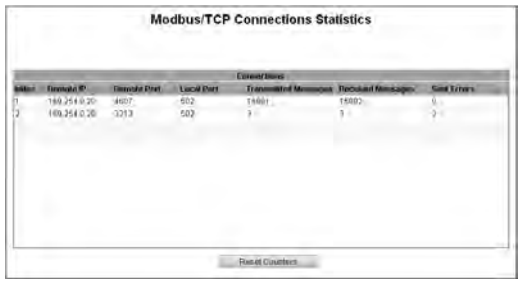

ACE850 Modbus/TCP connections statistics.

Modbus/TCP connections statistics

Item	Description
Index	Connection number
Remote IP	IP address of the Modbus client
Remote port	TCP port number on the client side
Local port	TCP port number on the server side
Transmitted messages	Number of Modbus requests for this connection
Received messages	Number of Modbus normal responses for this connection
Sent errors	Number of Modbus exception responses for this connection
Reset counters button	Button to reset the messages counters

PE80410

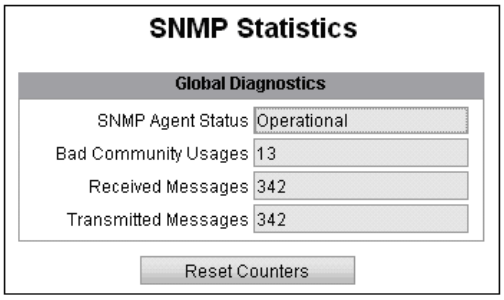

ACE850 SNMP statistics.

SNMP statistics

Item	Description
SNMP agent status	Status of the SNMP agent
Bad Community usages	Number of requests with invalid community
Received messages	Total number of SNMP requests
Transmitted messages	Total number of SNMP responses
Reset counters button	Button to reset the messages counters

PE80411

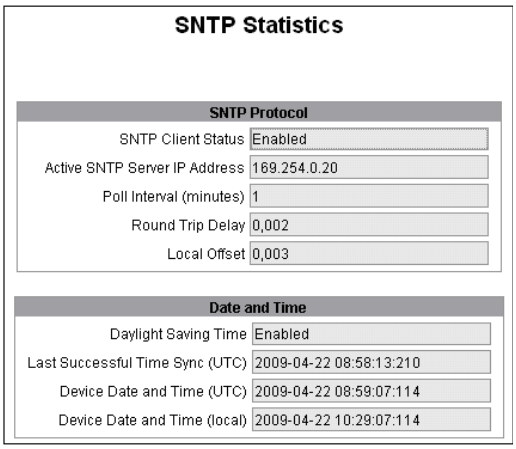

ACE850 SNTP statistics.

SNTP statistics

Item	Description
SNTP Client status	Value configured for the parameter in SFT2841
Active SNTP server IP address	Address of the server currently answering SNTP requests (0.0.0.0 if no server answer)
Poll interval	Value configured for the parameter in SFT2841
Round trip delay	Total time for SNMP request and response messages
Local offset	Difference between SNTP time and ACE time
Daylight saving time	Value configured for the parameter in SFT2841
Last Successful Time Synchronization (UTC)	Last time the ACE850 successfully contacted the SNTP server (UTC time)
Device Date and Time (UTC)	Current time and date of the ACE850 (UTC time)
Device Date and Time (local)	Current time and date of the ACE850 (local time)

PE80412

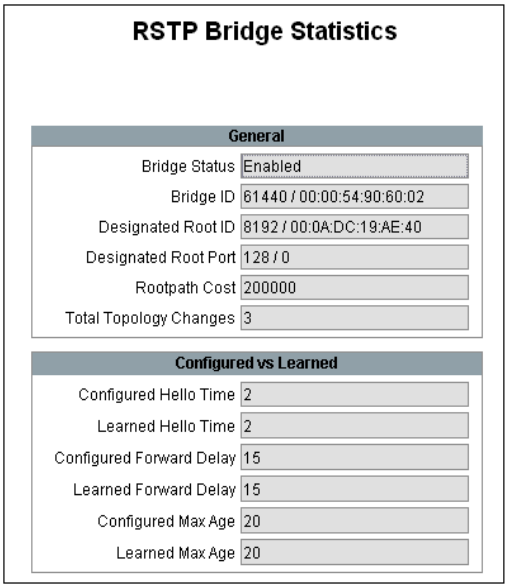

ACE850 RSTP bridge statistics.

RSTP bridge statistics

Item	Description
Bridge status	RSTP status of the bridge
Bridge ID	Bridge vector (Bridge priority/Bridge Mac address)
Designated Root ID	Bridge vector of the RSTP root bridge
Designated Root Port	Identifier of the root port (priority/number)
Rootpath cost	Path cost to the root
Total topology changes	Topology change counter (as defined by 802.1D-2004)
Configured hello time	Value of the configured hello time
Learned hello time	Operational value for hello time
Configured forward delay	Reminder of the configured forward delay
Learned forward delay	Operational value for forward delay
Configured max age	Value of the configured max age
Learned max age	Operational value for max age

PE80413

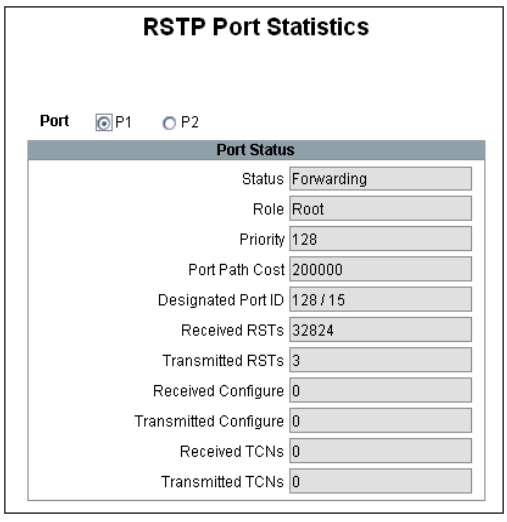

ACE850 RSTP port statistics.

RSTP port statistics

Item	Description
Port P1 / P2 buttons	Selection of the port of which statistics are displayed
Status	RSTP status for the selected port
Role	RSTP role for the selected port
Priority	Port priority
Port path cost	Port contribution to root path cost
Designated port ID	Identifier of the link partner port (priority/number)
Received RSTs	Number of RST BPDUs received (RSTP)
Transmitted RSTs	Number of RST BPDUs sent (RSTP)
Received configure	Number of Configuration BPDUs received (STP)
Transmitted configure	Number of Configuration BPDUs sent (STP)
Received TCNs	Number of Topology change BPDUs received (STP)
Transmitted TCNs	Number of Topology change BPDUs sent (STP)

Data addresses and coding

Presentation

Word addresses

All Sepam information accessible via Modbus communication is organized in 16-bit words. Each word is identified by its address coded on 16 bits, i.e. from 0 to 65535 (FFFFh).
However, to remain compatible with older equipment, the essential information has addresses coded from 0 to 9999 (270Fh).
In the following pages of this document, all addresses are expressed in hexadecimal (xxxxh).
Data which is similar from the control-monitoring application and the coding viewpoint is grouped in adjacent address zones.

Bit addresses

Some information is also available in bit form. The bit address is derived from the word address, where:
bit address = (word address x 16) + bit rank (0 to 15).
Example: word 0C00 bit 0 = C000, word 0C00 bit 14 = C00E.

Non-defined addresses

Only the addresses defined in this document should be used.
If other addresses are used, Sepam may return an exception message or data that is not significant.

Direct-access data

This data is permanently identified by its Modbus address. It may be accessed by a single read or write operation, addressing a part of or the entire zone in question.

Indirect-access data

In this case, the Modbus addresses indicated make up an exchange zone occupied by different data, depending on the context. At least two operations are required for each exchange. The necessary protocol is indicated for each zone.



32-bit formats
For these data, the most-significant word is sent first.
Saturation
In all formats, if a datum overruns the maximum permissible value for the related format, the value read for the datum is the maximum permissible value for the format.
The maximum value can also indicate a non-calculable value.

Data coding

Except where mentioned in the text, Sepam data is coded in one of the formats below:
- 32S: 32-bit signed 2's complement value
- 32NS: 32-bit non-signed value
- 16S: 16-bit signed 2's complement value
- 16NS: 16-bit non-signed value
- 16O: 16-bit signed value, coded with a shift of 8000h (-32768 is coded 0, 0 is coded 8000h, 32767 is coded FFFFh)
- B: bit or set of bits
- IEC: time coding format using four words as per IEC 60870-5-4:

Bit	*15*	*14*	*13*	*12*	*11*	*10*	*9*	*8*	*7*	*6*	*5*	*4*	*3*	*2*	*1*	*0*
Word 1	reserved									year (0 to 99)						
Word 2	0	0	0	0	month (1 to 12)				0	0	0	day (1 to 31)				
Word 3	0	0	0	hour (0 to 23)					0	0	minute (0 to 59)					
Word 4	millisecond (0 to 59999)															

Bits set to 0 correspond to format fields not used by Sepam. They are always read as 0 and are not taken into account during writing.
The reserved field is read as 0 and may receive different values during writing.

- ASCII: character string in ASCII code, the number of characters is indicated. When ASCII strings do not completely fill the field, zero bytes are added. The order of characters in Modbus words is the following:
  - character n in the LSB position
  - character n+1 in the MSB position
- MMmm: coding of a version number on 16 bits (major index in the MSB position, minor index in LSB position)

For 16 and 32 bits values, the following letter may follow the format code:
- A: an out of range or not computable value is indicated by 7FFFh (16-bit) or 00007FFFh (32-bit)
- B: an out of range or not computable value is indicated by 7FFFFFFFh (32-bit)

List of address zones

	Starting address	Ending address	Access mode	Access type
Time management and Sepam (compatible with Sepam 2000)				
Synchronization zone	0002	0005	direct	word
Identification zone	0006	000F	direct	word
Event table (first table compatible with Sepam 2000)				
First table	0040	0060	indirect	word
Second table	0070	0090	indirect	word
Application management				
Application zone	0180	01BF	direct	word
Metering and diagnosis				
32-bit metering and diagnosis	0200	02B1	direct	word
16-bit metering and diagnosis	0300	0339	direct	word
Directories				
Disturbance recordings	0400	044F	direct	word
Tripping context	0480	0497	direct	word
Out-of-sync context	0500	0507	direct	word
Data log (DLG)	0600	067C	direct	word
Motor start report (MSR)	0680	06FC	direct	word
Motor start trend (MST)	0700	077C	direct	word
Test				
Test zone	0C00	0C0F	direct	word / bit
Status conditions and controls (compatible with Sepam 2000)				
Logic/GOOSE inputs and logic equations	0C10	0C19	direct	word / bit
Logic outputs	0C20	0C23	direct	word / bit
Analog-output control	0C30	0C30	direct	word
Remote-control orders	0C84	0C8B	direct	word / bit
Remote indications	0C8F	0C9E	direct	word / bit
First access zone to settings				
Read settings	2000	207C	indirect	word
Read request	2080	2080	indirect	word
Remote setting	2100	217A	indirect	word
First zone for recording-data transfer				
Selection	2200	2203	indirect	word
Read	2300	237C	indirect	word
Customized table				
Data table	2600	267C	direct	word
Configuration table	2680	26FC	direct	word
Second access zone to settings (compatible with Sepam 2000)				
Read settings	D000	D07C	indirect	word
Read request	D080	D080	indirect	word
Remote setting	D100	D17A	indirect	word
Second zone for recording-data transfer (compatible with Sepam 2000)				
Selection	D200	D203	indirect	word
Read	D300	D37C	indirect	word
Metering and miscellaneous for Sepam 2000 compatibility				
Disturb. rec. identification zone	D204	D210	direct	word
Measurements x 1	FA00	FA2F	direct	word
Measurements x 10	FB00	FB24	direct	word
Compact zone	FB80	FB8F	direct	word
Configuration zone	FC00	FC03	direct	word

NOTICE

RISK OF DATA CORRUPTION

When using an ACE850 communication interface with IEC 61850 communication enabled, do not use the following address zones for Modbus/TCP (see the list address zone table):

- first access zone to settings
- first zone for recording-data transfer

Failure to follow these instructions can result in equipment damage.

Presentation

For each zone, the following data is provided:
- each Modbus address for the zone
- the Modbus function codes available for reading
- the Modbus function codes available for writing
- data formats, values and units
- whether the data can be included in a customized table ("config").

The indicated addresses are always word addresses. For bit access, the bit address must be used (see above).

Synchronization zone

The synchronization zone is a data structure containing the absolute data and time used by Sepam to time-tag its various recordings (events, disturbance recording, etc.).

The zone should be written in a single block containing 4 words, using function 16 (write word).

Synchronization zone	Address	Read	Write	Format	Config.
Absolute time (year)	0002	3	16	IEC	-
Absolute time (month + day)	0003	3	16	IEC	-
Absolute time (hours + minutes)	0004	3	16	IEC	-
Absolute time (milliseconds)	0005	3	16	IEC	-

Identification zone

The identification zone contains system information pertaining to the identification of the Sepam equipment.

Synchronization zone		Address	Read	Write	Value/ Format	Config.
Manufacturer identification		0006	3	-	0100	-
Equipment identification		0007	3	-	0	-
Marking + equipment type		0008	3	-	1300	-
Modbus version		0009	3	-	MMmm	-
Application	technical level	000A	3	-	1 to n	-
	version	000B	3	-	MMmm	-
Sepam check-word		000C	3	-	idem 0C8F	-
Summary zone		000D	3	-	0 (not mngd)	-
Command		000E	3	16	0 (not mngd)	-
Extension address		000F	3	-	180	-

This zone is provided to ensure compatibility with existing equipment. A more complete description is available starting at address 0180 in the application zone or using the identification read function.

Application zone

The application zone contains a set of information on the contents of Sepam. Some of the information is reserved.

Application zone	Address	Read	Write	Format	Config.
Reserved	0180	3	-	-	-
Reserved	0181	3	-	-	-
Reserved	0182	3	-	-	-
Application abbreviation	0183/0185	3	-	ASCII 6c	-
Application name	0186/018F	3	-	ASCII 20c	-
Sepam marking	0190/0199	3	-	ASCII 20c	-
Application version	019A/019C	3	-	ASCII 6c	-
Local-language name	019D/01A6	3	-	ASCII 12c	-
Technical level	01A7	3	-	16NS	-
UV number	01A8	3	-	16NS	-
Reserved	01A9	3	-	-	-
Reserved	01AA	3	-	-	-
Reserved	01AB	3	-	-	-
Reserved	01AC	3	-	-	-
Reserved	01AD	3	-	-	-
Reserved	01AE	3	-	-	-
Local-language version	01AF	3	-	MMmm	-
English-language version	01B0	3	-	MMmm	-
Boot version	01B1	3	-	MMmm	-
Base version	01B2	3	-	MMmm	-
Communication version	01B3	3	-	MMmm	-
DSM-module version	01B4/01B6	3	-	ASCII 6c	-
MET148-2 n° 1 module version	01B7/01B9	3	-	ASCII 6c	-
MET148-2 n° 2 module version	01BA/01BC	3	-	ASCII 6c	-
MSA141 module version	01BD/01BF	3	-	ASCII 6c	-
Reserved	01C0/01C2	3	-	ASCII 6c	-
Mimic-based UMI version	01C3/01C5	3	-	ASCII 6c	-
MCS025 module version	01C6/01C8	3	-	ASCII 6c	-
ACE969 COM1 module version	01C9/01CB	3	-	ASCII 6c	-
ACE969 COM2 module version	01CC/01CE	3	-	ASCII 6c	-
ACE850 module version	01CF/01D1	3	-	ASCII 6c	-

32-bit metering and diagnosis zone

This zone contains all Sepam metering and diagnosis information, coded on 32 bits. Zone size exceeds the capacity of a frame, i.e. at least two requests are required to read it in full. Depending on the application and the parameter settings, some information is not significant.

32-bit metering and diagnosis zone	Address	Read	Write	Format	Unit	Config.
Phase current I1	0200/0201	3, 4	-	32NS	0.1 A	yes
Phase current I2	0202/0203	3, 4	-	32NS	0.1 A	yes
Phase current I3	0204/0205	3, 4	-	32NS	0.1 A	yes
Residual current I0Σ	0206/0207	3, 4	-	32NS	0.1 A	yes
Residual current I0	0208/0209	3, 4	-	32NS	0.1 A	yes
Demand current Im1	020A/020B	3, 4	-	32NS	0.1 A	yes
Demand current Im2	020C/020D	3, 4	-	32NS	0.1 A	yes
Demand current Im3	020E/020F	3, 4	-	32NS	0.1 A	yes
Peak demand current IM1	0210/0211	3, 4	-	32NS	0.1 A	yes
Peak demand current IM2	0212/0213	3, 4	-	32NS	0.1 A	yes
Peak demand current IM3	0214/0215	3, 4	-	32NS	0.1 A	yes
Phase-to-phase voltage U21	0216/0217	3, 4	-	32NS	1 V	yes
Phase-to-phase voltage U32	0218/0219	3, 4	-	32NS	1 V	yes
Phase-to-phase voltage U13	021A/021B	3, 4	-	32NS	1 V	yes
Phase-to-neutral voltage V1	021C/021D	3, 4	-	32NS	1 V	yes
Phase-to-neutral voltage V2	021E/021F	3, 4	-	32NS	1 V	yes
Phase-to-neutral voltage V3	0220/0221	3, 4	-	32NS	1 V	yes
Residual voltage V0	0222/0223	3, 4	-	32NS	1 V	yes
Positive sequence voltage Vd	0224/0225	3, 4	-	32NS	1 V	yes
Negative-sequence voltage Vi	0226/0227	3, 4	-	32NS	1 V	yes
Frequency f	0228/0229	3, 4	-	32NSA	0.01 Hz	yes
Active power P	022A/022B	3, 4	-	32SB	0.1 kW	yes
Reactive power Q	022C/022D	3, 4	-	32SB	0.1 kvar	yes
Apparent power S	022E/022F	3, 4	-	32SB	0.1 kVA	yes
Power factor cos φ	0230/0231	3, 4	-	32SA	0.01	yes
Peak demand active power PM	0232/0233	3, 4	-	32S	0.1 kW	yes
Peak demand reactive power QM	0234/0235	3, 4	-	32S	0.1 kvar	yes
Active power P phase 1	0236/0237	3, 4	-	32SB	0.1 kW	yes
Active power P phase 2	0238/0239	3, 4	-	32SB	0.1 kW	yes
Active power P phase 3	023A/023B	3, 4	-	32SB	0.1 kW	yes
Reactive power Q phase 1	023C/023D	3, 4	-	32SB	0.1 kvar	yes
Reactive power Q phase 2	023E/023F	3, 4	-	32SB	0.1 kvar	yes
Reactive power Q phase 3	0240/0241	3, 4	-	32SB	0.1 kvar	yes
Apparent power S phase 1	0242/0243	3, 4	-	32SB	0.1 kVA	yes
Apparent power S phase 2	0244/0245	3, 4	-	32SB	0.1 kVA	yes
Apparent power S phase 3	0246/0247	3, 4	-	32SB	0.1 kVA	yes
Positive active energy Ea+	0248/0249	3, 4	-	32NS	100 kWh	yes
Negative active energy Ea-	024A/024B	3, 4	-	32NS	100 kWh	yes
Positive reactive energy Er+	024C/024D	3, 4	-	32NS	100 kvarh	yes
Negative reactive energy Er-	024E/024F	3, 4	-	32NS	100 kvarh	yes
Ext. positive active energy Ea+	0250/0251	3, 4	-	32NS	100 kWh	yes
Ext. negative active energy Ea-	0252/0253	3, 4	-	32NS	100 kWh	yes
Ext. positive reactive energy Er+	0254/0255	3, 4	-	32NS	100 kvarh	yes
Ext. negative reactive energy Er-	0256/0257	3, 4	-	32NS	100 kvarh	yes
Neutral-point voltage Vnt	0258/0259	3, 4	-	32NS	1 V	yes
Reserved	025A/025F	3, 4	-	-	-	yes

32-bit metering and diagnosis zone (cont.)

32-bit metering and diagnosis zone	Address	Read	Write	Format	Unit	Config.
Reserved	0260/0267	3, 4	-	-	-	yes
Number of operations	0268/0269	3, 4	-	32NS	1	yes
Tripping current phase 1 Itrip1	026A/026B	3, 4	-	32NS	0.1 A	yes
Tripping current phase 2 Itrip2	026C/026D	3, 4	-	32NS	0.1 A	yes
Tripping current phase 3 Itrip3	026E/026F	3, 4	-	32NS	0.1 A	yes
Tripping current calculated I0 Itrip0	0270/0271	3, 4	-	32NS	0.1 A	yes
Reserved	0272/027B	3, 4	-	-	-	yes
Number of operations	027C/027D	3, 4	-	32NS	1	yes
Reserved	027E/027F	3, 4	-	-	-	yes
Reserved	0280/0289	3, 4	-	-	-	yes
Impedance Zd	028A/028B	3, 4	-	32NSB	1 mΩ	yes
Impedance Z21	028C/028D	3, 4	-	32NSB	1 mΩ	yes
Impedance Z32	028E/028F	3, 4	-	32NSB	1 mΩ	yes
Impedance Z13	0290/0291	3, 4	-	32NSB	1 mΩ	yes
Reserved	0292/029F	3, 4	-	-	-	yes
Reserved	02A0/02A5	3, 4	-	-	-	yes
Voltage difference dU (synchro-check)	02A6/02A7	3, 4	-	32NSB	0,1 % of Uns Sync1	yes
Frequency difference df (synchro-check)	02A8/02A9	3, 4	-	32NSA	0.001 Hz	yes
Phase difference dPhi (synchro-check)	02AA/02AB	3, 4	-	32NSA	0.1°	yes
Capacitor capacitance C1 (or C21)	02AC/02AD	3, 4	-	32NSB	0.1 µF	yes
Capacitor capacitance C2 (or C32)	02AE/02AF	3, 4	-	32NSB	0.1 µF	yes
Capacitor capacitance C3 (or C13)	02B0/02B1	3, 4	-	32NSB	0.1 µF	yes
Effective rotation direction	02B2/02B3	3, 4	-	32NSB	0=123 ou 1=132	yes
Reserved	02B4/02FF		-			

16-bit metering and diagnosis zone

This zone contains all Sepam metering and diagnosis information, coded on 16 bits. Depending on the application and the parameter settings, some information is not significant.

16-bit metering and diagnosis zone	Address	Read	Write	Format	Unit	Config.
Temperature 1 MET148-2 n° 1	0300	3, 4	-	16SA	1°C	yes
Temperature 2 MET148-2 n° 1	0301	3, 4	-	16SA	1°C	yes
Temperature 3 MET148-2 n° 1	0302	3, 4	-	16SA	1°C	yes
Temperature 4 MET148-2 n° 1	0303	3, 4	-	16SA	1°C	yes
Temperature 5 MET148-2 n° 1	0304	3, 4	-	16SA	1°C	yes
Temperature 6 MET148-2 n° 1	0305	3, 4	-	16SA	1°C	yes
Temperature 7 MET148-2 n° 1	0306	3, 4	-	16SA	1°C	yes
Temperature 8 MET148-2 n° 1	0307	3, 4	-	16SA	1°C	yes
Temperature 1 MET148-2 n° 2	0308	3, 4	-	16SA	1°C	yes
Temperature 2 MET148-2 n° 2	0309	3, 4	-	16SA	1°C	yes
Temperature 3 MET148-2 n° 2	030A	3, 4	-	16SA	1°C	yes
Temperature 4 MET148-2 n° 2	030B	3, 4	-	16SA	1°C	yes
Temperature 5 MET148-2 n° 2	030C	3, 4	-	16SA	1°C	yes
Temperature 6 MET148-2 n° 2	030D	3, 4	-	16SA	1°C	yes
Temperature 7 MET148-2 n° 2	030E	3, 4	-	16SA	1°C	yes
Temperature 8 MET148-2 n° 2	030F	3, 4	-	16SA	1°C	yes
Total harmonic distortion Uthd	0310	3, 4	-	16NS	0.1%	yes
Total harmonic distortion Ithd	0311	3, 4	-	16NS	0.1%	yes
Angle φ0Σ	0312	3, 4	-	16NSA	1°	yes
Reserved	0313	3, 4	-	-	-	yes
Angle φ0	0314	3, 4	-	16NSA	1°	yes
Reserved	0315	3, 4	-	-	-	yes
Angle φ1	0316	3, 4	-	16NSA	1°	yes
Angle φ2	0317	3, 4	-	16NSA	1°	yes
Angle φ3	0318	3, 4	-	16NSA	1°	yes
Negative sequence / unbalance	0319	3, 4	-	16NS	% Ib	yes
Reserved	031A	3, 4	-	-	-	yes
Machine rotation speed	031B	3, 4	-	16NS	rpm	yes
Thermal capacity used	031C	3, 4	-	16NS	%	yes
Running hours counter	031D	3, 4	-	16NS	1 hr	yes
Time before tripping	031E	3, 4	-	16NS	1 min	yes
Time before closing	031F	3, 4	-	16NS	1 min	yes
Starting time / overload	0320	3, 4	-	16NS	0.01 s	yes
Start inhibit time	0321	3, 4	-	16NS	1 min	yes
Number of starts allowed	0322	3, 4	-	16NS	1	yes
Learnt cooling time constant T2 (49 RMS) thermal rate 1	0323	3, 4	-	16NS	1 min	yes
Learnt cooling time constant T2 (49 RMS) thermal rate 2	0324	3, 4	-	16NS	1 min	yes
Total cumulative breaking current	0325	3, 4	-	16NS	1(kA)²	yes
Cumulative breaking current (0 < I < 2 In)	0326	3, 4	-	16NS	1(kA)²	yes
Cum. breaking current (2 In < I < 5 In)	0327	3, 4	-	16NS	1(kA)²	yes
Cum. breaking current (5 In < I< 10 In)	0328	3, 4	-	16NS	1(kA)²	yes
Cum. breaking current (10 In < I < 40 In)	0329	3, 4	-	16NS	1(kA)²	yes
Cumulative breaking current (I > 40 In)	032A	3, 4	-	16NS	1(kA)²	yes
Initial value of cumulative breaking current	032B	3, 4	-	16NS	1(kA)²	yes
Starting/overload current	032C	3, 4	-	16NS	1 A	yes
Operating time	032D	3, 4	-	16NS	1 ms	yes
Charging time	032E	3, 4	-	16NSA	1 ms	yes
Number of racking out operations	032F	3, 4	-	16NS	1	yes
Reserved	0330	3, 4	-	-	-	yes
Number of trips on phase current	0331	3, 4	-	16NS	1	yes
Number of trips on earth-fault current	0332	3, 4	-	16NS	1	yes
Reserved	0333/0339	3, 4	-	-	-	yes

Directory zones

These zones indicate the recordings available in Sepam for the given data category. They have a similar structure.

Disturbance-recording directory

Disturbance-recording directory	Address	Read	Write	Format	Unit	Config.
Size of set-up files	0400	3	-	16NS	bytes	-
Size of data files	0401/0402	3	-	32NS	bytes	-
Number of records available	0403	3	-	16NS	1	-
Date of record 1 (most recent)	0404/0407	3	-	IEC	-	-
Date of record 2	0408/040B	3	-	IEC	-	-
...	...	...		...		
Date of record 20 (oldest)	044C/044F	3	-	IEC	-	-

Tripping-context directory

Context directory	Address	Read	Write	Format	Unit	Config.
Context size	0480	3	-	16NS	bytes	-
Not used	0481/0482	3	-	-	-	-
Number of records available	0483	3	-	16NS	1	-
Date of record 1 (most recent)	0484/0487	3	-	IEC	-	-
Date of record 2	0488/048B	3	-	IEC	-	-
...	...	...		...		
Date of record 5 (least recent)	0494/0497	3	-	IEC	-	-

Out-of-sync context directory

Context directory	Address	Read	Write	Format	Unit	Config.
Context size	0500	3	-	16NS	bytes	-
Not used	0501/0502	3	-	-	-	-
Number of records available	0503	3	-	16NS	1	-
Date of record	0504	3	-	IEC	-	-

Data log (DLG) directory

Context directory	Address	Read	Write	Format	Unit	Config.
Number of files available	0600	3	-	16NS	1	-
Size of configuration file for all files	0601	3	-	16NS	bytes	-
Size of data file 1 (most recent)	0602/0603	3	-	32NS	bytes	-
Size of data file 2	0604/0605	3	-	32NS	bytes	-
...	...	...		...		
Size of data file 20 (oldest)	0628/0629	3	-	32NS	bytes	-
Date of file 1 (most recent)	062A/062D	3	-	IEC	-	-
Date of file 2	062E/0631	3	-	IEC	-	-
...	...	...		...		
Date of file 20 (oldest)	0676/0679	3	-	IEC	-	-
Not used	067A/067C	3	-	-	-	-

Directory zones (cont.)

Motor start report (MSR) directory

Context directory	Address	Read	Write	Format	Unit	Config.
Number of files available	0680	3	-	16NS	1	-
Size of configuration file for all files	0681	3	-	16NS	bytes	-
Size of data file 1 (most recent)	0682/0683	3	-	32NS	bytes	-
Size of data file 2	0684/0685	3	-	32NS	bytes	-
...	...	...	...	...	...	...
Size of data file 20 (oldest)	06A8/06A9	3	-	32NS	bytes	-
Date of file 1 (most recent)	06AA/06AD	3	-	IEC	-	-
Date of file 2	06AE/06B1	3	-	IEC	-	-
...	...	...		...	...	...
Date of file 20 (oldest)	06F6/06F9	3	-	IEC	-	-
Not used	06FA/06FC	3	-	-	-	-

Motor start trend (MST) directory

Context directory	Address	Read	Write	Format	Unit	Config.
Number of files available	0700	3	-	16NS	1	-
Size of configuration file for all files	0701	3	-	16NS	bytes	-
Size of all files	0702/0703	3	-	32NS	bytes	-
Not used	0704/0729	3	-	-	-	-
Date of file 1 (most recent)	072A/072D	3	-	IEC	-	-
Date of file 2	072E/0731	3	-	IEC	-	-
...	...	...		...		
Date of file 20 (oldest)	0776/0779	3	-	IEC	-	-
Not used	077A/077C	3	-	-	-	-

Test zone

The test zone is a 16-word zone that may be accessed via the communication link by all functions, in both read and write modes, to facilitate communication testing at the time of commissioning or to test the link.
These words are set to zero when Sepam starts.

Test zone	Address	Bit addresses	Read	Write	Config.
Test word 1	0C00	C000/C00F	1, 2, 3, 4	5, 6, 15, 16	-
Test word 2	0C01	C010/C01F	1, 2, 3, 4	5, 6, 15, 16	-
...	...	...	...	...	
Test word 16	0C0F	C0F0/C0FF	1, 2, 3, 4	5, 6, 15, 16	-

Status-condition and control zones

Logic input / logic equation / GOOSE inputs zone

Input / equation zone	Address	Bit addresses	Read	Write	Format	Config.
Logic inputs I101 to I114 (MES120 n° 1)	0C10	C100/C10F	1, 2, 3, 4	-	B	yes
Logic inputs I201 to I214 (MES120 n° 2)	0C11	C110/C11F	1, 2, 3, 4	-	B	yes
Reserved	0C12	C120/C12F	-	-	-	yes
Logic equation bits (1st word)	0C13	C130/C13F	1, 2, 3, 4	-	B	yes
Logic equation bits (2nd word)	0C14	C140/C14F	1, 2, 3, 4	-	B	yes
Logic equation bits (3rd word)	0C15	C150/C15F	1, 2, 3, 4	-	B	yes
Logic equation bits (4th word)	0C16	C160/C16F	1, 2, 3, 4	-	B	yes
GOOSE inputs G401 to G416 (1st word)	0C17	C170/C18F	1, 2, 3, 4	-	B	yes
GOOSE inputs G501 to G516 (2nd word)	0C18	C180/C18F	1, 2, 3, 4	-	B	yes
States of GOOSE emissions tests	0C19	C191/C193	1, 2, 3, 4	-	B	yes

Bits of logic inputs

15	*14*	*13*	*12*	*11*	*10*	*9*	*8*	*7*	*6*	*5*	*4*	*3*	*2*	*1*	*0*
-	-	Ix14	Ix13	Ix12	Ix11	Ix10	Ix09	Ix08	Ix07	Ix06	Ix05	Ix04	Ix03	Ix02	Ix01

Logic equation bits

	1st word 0C13	2nd word 0C14	3rd word 0C15	4th word 0C16
Bit 00	V1	V17	V_TRIP_STP3	V_MIMIC_IN_9
Bit 01	V2	V18	V_TRIP_STP4	V_MIMIC_IN_10
Bit 02	V3	V19	V_CLOSE_STP1	V_MIMIC_IN_11
Bit 03	V4	V20	V_CLOSE_STP2	V_MIMIC_IN_12
Bit 04	V5	V_INHIBCLOSE	V_CLOSE_STP3	V_MIMIC_IN_13
Bit 05	V6	V_FLAGREC	V_CLOSE_STP4	V_MIMIC_IN_14
Bit 06	V7	V_TRIPCB	V_TRANS_ON_FLT	V_MIMIC_IN_15
Bit 07	V8	V_CLOSECB	V_TRANS_STOP	V_MIMIC_IN_16
Bit 08	V9	V_RESET	V_MIMIC_IN_1	V_TRANS_V_EN
Bit 09	V10	V_CLEAR	V_MIMIC_IN_2	V_MSR_START
Bit 10	V11	V_INHIBIT_RESET_LOCAL	V_MIMIC_IN_3	V_DLG_START
Bit 11	V12	V_SHUTDOWN	V_MIMIC_IN_4	Reserved
Bit 12	V13	V_DE-EXCITATION	V_MIMIC_IN_5	Reserved
Bit 13	V14	V_CLOSE_NOCTRL	V_MIMIC_IN_6	Reserved
Bit 14	V15	V_TRIP_STP1	V_MIMIC_IN_7	Reserved
Bit 15	V16	V_TRIP_STP2	V_MIMIC_IN_8	Reserved

GOOSE input bits and status bits of GOOSE emission tests

	GOOSE Inputs		Status bits of GOOSE emission tests
	1st word 0C17	2nd word 0C18	OC19
Bit 00	G401	G501	GOOSE test n°1
Bit 01	G402	G502	GOOSE test n°2
Bit 02	G403	G503	GOOSE test n°3
Bit 03	G404	G504	GOOSE test n°4
Bit 04	G405	G505	Reserved
Bit 05	G406	G506	Reserved
Bit 06	G407	G507	Reserved
Bit 07	G408	G508	Reserved
Bit 08	G409	G509	Reserved
Bit 09	G410	G510	Reserved
Bit 10	G411	G511	Reserved
Bit 11	G412	G512	Reserved
Bit 12	G413	G513	Reserved
Bit 13	G414	G514	Reserved
Bit 14	G415	G515	Reserved
Bit 15	G416	G516	Reserved

Logic-output zone

This zone indicates the status of the logic outputs and the LEDs on the front panel.

Logic-output zone	Address	Bit addresses	Read	Write	Format	Config.
Logic outputs O1 to O3 and O5 (base)	0C20	C200/C20F	1, 2, 3, 4	-	B	yes
Logic outputs O101 to O106 (MES120 n° 1)	0C21	C210/C21F	1, 2, 3, 4	-	B	yes
Logic outputs O201 to O206 (MES120 n° 2)	0C22	C220/C22F	1, 2, 3, 4	-	B	yes
Reserved	0C23	C230/C23F	-	-	-	yes
LED status	0C24	C240/C24F	1, 2, 3, 4	-	B	yes

Bits of logic outputs

15	*14*	*13*	*12*	*11*	*10*	*9*	*8*	*7*	*6*	*5*	*4*	*3*	*2*	*1*	*0*
-	-	-	-	-	-	-	-	-	-	-	O5	-	O3	O2	O1

Bits of LEDs

15	*14*	*13*	*12*	*11*	*10*	*9*	*8*	*7*	*6*	*5*	*4*	*3*	*2*	*1*	*0*
-	-	-	-	-	-	L9	L8	L7	L6	L5	L4	L3	L2	L1	LD

LD: red "Sepam unavailable" LED.

Analog-output control zone

Analog-output zone	Address	Read	Write	Format	Config.
MSA141	0C30	3	6, 16	16S/16NS (1)	-

***(1)** As per MSA141 parameter settings (option).*

Remote control of the analog output

The analog output of the MSA141 module may be set up for remote control via the Modbus communication link.

The usable range of the numerical value transmitted is defined by the "min. value" and "max. value" settings of the analog output (SFT2841).

Remote-control zone

Remote-control zone	Address	Bit addresses	Read	Write	Format	Config.
STC1 to STC16	0C84	C840/C84F	1, 2, 3, 4	5, 6, 15, 16	B	-
STC17 to STC32	0C85	C850/C85F	1, 2, 3, 4	5, 6, 15, 16	B	-
STC33 to STC48	0C86	C860/C86F	1, 2, 3, 4	5, 6, 15, 16	B	-
STC49 to STC64	0C87	C870/C87F	1, 2, 3, 4	5, 6, 15, 16	B	-
TC1 to TC16	0C88	C880/C88F	1, 2, 3, 4	5, 6, 15, 16	B	-
TC17 to TC32	0C89	C890/C89F	1, 2, 3, 4	5, 6, 15, 16	B	-
TC33 to TC48	0C8A	C8A0/C8AF	1, 2, 3, 4	5, 6, 15, 16	B	-
TC49 to TC64	0C8B	C8B0/C8BF	1, 2, 3, 4	5, 6, 15, 16	B	-

Use of remote-control orders

64 bits of pulse-type remote-control orders (TC) are available on Easergy Sepam series 60. According to the configuration chosen, the TC can be executed in either of the following modes:

- direct mode
- confirmed SBO (Select Before Operate) mode

Remote-control orders in direct mode

The remote-control order is executed when it is written in the remote-control word. The program logic resets it to zero after the remote-control order is acknowledged.

Remote-control orders (TC) in confirmed SBO mode

Remote-control orders involve two steps:

- selection by the master of the order to be sent by writing the bit in the STC word and checking of the selection by rereading the word
- execution of the order to be sent by writing the bit in the TC word.

The remote-control order is executed if the bit in the STC word and the bit in the associated TC word are set. The program logic resets the STC and TC bits to zero after the remote-control order is acknowledged.

Deselection of the STC bit takes place:

- if the master deselects it by writing in the STC word
- if the master selects (write bit) a bit other than the one already selected
- if the master sets a bit in the TC word which does not match the selection. In this case, no remote-control order is executed.
- if the related order is not given within 30 seconds.

Inhibiting predefined remote-control orders

Predefined processing of remote-control orders may be inhibited, except for the tripping remote-control order TC1 which may be activated at any time:

- by choosing Local or Test control mode via the key-switch on Sepam relays with mimic-based UMIs
- by assigning a logic input to the "Inhibit remote control" function.

The parameter setting of the logic input may be done in two modes:

- inhibition if the input is set to 1
- inhibition if the input is set to 0 (negative input).

Security

It is possible to protect the remote-control zone against writing, see the section on security.

The choice between direct mode or confirmed SBO mode for remote control orders is made in the Sepam General characteristics configuration screen. This is a global parameter that applies to:

- *COM1 Sepam communication port,*
- *Ethernet communication port.*

Remote-control zone (cont'd)

Pulse-type remote-control orders are pre-assigned to protection, control and metering functions.
The assignment of the remote-control orders is given in the tables below.
Depending on the applications and functions in operation, certain remote-control orders may not be applicable and will produce no effect.
If the switchgear function is enabled (or running), the following remote-control orders are acknowledged:
- device tripping and closing
- recloser enabling and disabling.

The corresponding value for Sepam 2000 is indicated. This value corresponds to the address, not the role (roles are not static in Sepam 2000).

Word 0C88: TC1 to TC16		**Sepam 2000**
Bit 00: TC1	Trip / open (1)	KTC33
Bit 01: TC2	Closing	KTC34
Bit 02: TC3	Sepam reset (1)	KTC35
Bit 03: TC4	Peak demand current reset	KTC36
Bit 04: TC5	Peak demand power reset (1)	KTC37
Bit 05: TC6	Reserved	KTC38
Bit 06: TC7	Reserved	KTC39
Bit 07: TC8	Enable recloser (1)	KTC40
Bit 08: TC9	Disable recloser (1)	KTC41
Bit 09: TC10	Free	KTC42
Bit 10: TC11	Free	KTC43
Bit 11: TC12	Free	KTC44
Bit 12: TC13	Free	KTC45
Bit 13: TC14	Free	KTC46
Bit 14: TC15	Free	KTC47
Bit 15: TC16	Free	KTC48
Word 0C89: TC17 to TC32		**Sepam 2000**
Bit 00: TC17	Reserved	KTC49
Bit 01: TC18	Inhibit disturbance-recording triggering (OPG)	KTC50
Bit 02: TC19	Confirm disturbance-recording triggering (OPG)	KTC51
Bit 03: TC20	Manual disturbance-recording triggering (OPG)	KTC52
Bit 04: TC21	Free	KTC53
to		
Bit 12: TC29	Free	KTC61
Bit 13: TC30	Inhibit thermal protection (1)	KTC62
Bit 14: TC31	Confirm thermal protection (1)	KTC63
Bit 15: TC32	Reset undercurrent protection	KTC64
Word 0C8A: TC33 to TC48		**Sepam 2000**
Bit 00: TC33	Switching to setting group A (1)	-
Bit 01: TC34	Switching to setting group B (1)	-
Bit 02: TC35	Priority group shutdown	-
Bit 03: TC36	Cancel priority group shutdown	
Bit 04: TC37	Enable synchro-check (1)	-
Bit 05: TC38	Disable synchro-check (1)	-
Bit 06: TC39	Enable voltage check (1)	-
Bit 07: TC40	Disable voltage check (1)	-
Bit 08: TC41	Reserved	-
Bit 09: TC42	Reserved	-
Bit 10: TC43	Reserved	-
Bit 11: TC44	Reserved	-
Bit 12: TC45	Reserved	-
Bit 13: TC46	Reserved	-
Bit 14: TC47	Reserved	-
Bit 15: TC48	Reserved	-

(1) *The maximum number of remote controls is limited to 1,000,000 over the life of the product.*

Zone télécommandes (cont.)

Word 0C8B: TC49 to TC64		Sepam 2000
Bit 00: TC49	Inhibit TS8 (Inductive) and TS9 (Capacitive) (1)	-
Bit 01: TC50	Confirm TS8 (Inductive) and TS9 (Capacitive) (1)	-
Bit 02: TC51	Trigger Motor start report	-
Bit 03: TC52	Trigger data log	-
Bit 04: TC53	Stop data log (Circular mode)	-
Bit 05: TC54	123 phase rotation direction (1)	-
Bit 06: TC55	132 phase rotation direction (1)	-
Bit 07: TC56	Free	-
to		
Bit 15: TC64	Free	-

(1) *The maximum number of remote controls is limited to 1,000,000 over the life of the product.*

Remote-indications zone

Remote-indications zone	Address	Bit addresses	Read	Write	Format	Config.
Sepam check-word	0C8F	C8F0/C8FF	1, 2, 3, 4	-	B	yes
TS1-TS16	0C90	C900/C90F	1, 2, 3, 4	-	B	yes
TS17-TS32	0C91	C910/C91F	1, 2, 3, 4	-	B	yes
TS33-TS48	0C92	C920/C92F	1, 2, 3, 4	-	B	yes
TS49-TS64	0C93	C930/C93F	1, 2, 3, 4	-	B	yes
TS65-TS80	0C94	C940/C94F	1, 2, 3, 4	-	B	yes
TS81-TS96	0C95	C950/C95F	1, 2, 3, 4	-	B	yes
TS97-TS112	0C96	C960/C96F	1, 2, 3, 4	-	B	yes
TS113-TS128	0C97	C970/C97F	1, 2, 3, 4	-	B	yes
TS129-TS144	0C98	C980/C98F	1, 2, 3, 4	-	B	yes
TS145-TS160	0C99	C990/C99F	1, 2, 3, 4	-	B	yes
TS161-TS176	0C9A	C9A0/C9AF	1, 2, 3, 4	-	B	yes
TS177-TS192	0C9B	C9B0/C9BF	1, 2, 3, 4	-	B	yes
TS193-TS208	0C9C	C9C0/C9CF	1, 2, 3, 4	-	B	yes
TS209-TS224	0C9D	C9D0/C9DF	1, 2, 3, 4	-	B	yes
TS225-TS240	0C9E	C9E0/C9EF	1, 2, 3, 4	-	B	yes

The check work comprises a set of information on Sepam status.
The "high-speed reading" function (function 7) is used to access the most-significant byte in the check word (bits 15 to 8).

Word 0C8F: Sepam check-word		Notes
Bit 00	Reserved	
Bit 01	Modbus Security function enabled	(1)
Bit 02	Reserved	
Bit 03	Sepam in “data loss” status in 2nd event zone	(1) (2)
Bit 04	Event in 2nd event zone	(1)
Bit 05	Setting group A in service	(2)
Bit 06	Setting group B in service	(2)
Bit 07	Sepam time not correct	(2)
Bit 08	Sepam partial fault	(2)
Bit 09	Sepam major fault	
Bit 10	Sepam in parameter setting mode	(2)
Bit 11	Remote setting inhibited	
Bit 12	Inductive network (1)/capacitive (0)	
Bit 13	Sepam not synchronous	(2)
Bit 14	Sepam in “data loss” status in 1st event zone	(1) (2)
Bit 15	Event in 1st event zone	(1)

(1) *This information is specific to each communication port.*
(2) *Status changes of bits 3, 5, 6, 7, 8, 10, 13, 14 trigger sending of a time-tagged event (see the section on time-tagged events).*

Remote-indication bits (TS) are pre-assigned to protection, control and metering functions. The tables below present each remote-indication bit. Depending on the applications and functions in operation, certain remote-indication bits may not be applicable.
The corresponding value for Sepam 2000 is indicated. This value corresponds to the address, not the meaning (meanings are not static in Sepam 2000).

Word 0C90: TS1 to TS16		Sepam 2000
Bit 00: TS1	Matching fault or Trip Circuit Supervision	KTS1
Bit 01: TS2	Control fault	KTS2
Bit 02: TS3	TC / position discrepancy	KTS3
Bit 03: TS4	External tripping 1	KTS4
Bit 04: TS5	Sepam not reset after fault	KTS5
Bit 05: TS6	External tripping 2	KTS6
Bit 06: TS7	External tripping 3	KTS7
Bit 07: TS8	Cos φ inductive (1)	KTS8
Bit 08: TS9	Cos φ capacitive (1)	KTS9
Bit 09: TS10	Closed position	KTS10
Bit 10: TS11	Device racked out	KTS11
Bit 11: TS12	SF6 alarm	KTS12
Bit 12: TS13	Earthing switch closed	KTS13
Bit 13: TS14	Remote-control enabled	KTS14
Bit 14: TS15	Overcurrent protection (summary)	KTS15
Bit 15: TS16	Free	KTS16

(1) *TC49 can be used to inhibit this TS.*

Word 0C91: TS17 to TS32		**Sepam 2000**
Bit 00: TS17	Free	KTS17
to		
Bit 14: TS31	Free	KTS31
Bit 15: TS32	Send blocking signal 1	KTS32
Word 0C92: TS33 to TS48		**Sepam 2000**
Bit 00: TS33	Free	KTS33
to		
Bit 15: TS48	Free	KTS48
Word 0C93: TS49 to TS64		**Sepam 2000**
Bit 00: TS49	A new disturbance recording is available (TS maintained for 28 ms)	KTS49
Bit 01: TS50	Disturbance recording inhibited	KTS50
Bit 02: TS51	Remote setting inhibited	KTS51
Bit 03: TS52	Free	KTS52
to		
Bit 15: TS64	Free	KTS64
Word 0C94: TS65 to TS80		
Bit 00: TS65	Protection 50/51 unit 1	
Bit 01: TS66	Protection 50/51 unit 2	
Bit 02: TS67	Protection 50/51 unit 3	
Bit 03: TS68	Protection 50/51 unit 4	
Bit 04: TS69	Reserved	
Bit 05: TS70	Reserved	
Bit 06: TS71	Reserved	
Bit 07: TS72	Reserved	
Bit 08: TS73	Protection 50N/51N unit 1	
Bit 09: TS74	Protection 50N/51N unit 2	
Bit 10: TS75	Protection 50N/51N unit 3	
Bit 11: TS76	Protection 50N/51N unit 4	
Bit 12: TS77	Reserved	
Bit 13: TS78	Reserved	
Bit 14: TS79	Reserved	
Bit 15: TS80	Reserved	
Word 0C95: TS81 to TS96		
Bit 00: TS81	Protection 27 unit 1	
Bit 01: TS82	Protection 27 unit 2	
Bit 02: TS83	Reserved	
Bit 03: TS84	Reserved	
Bit 04: TS85	Protection 27D unit 1	
Bit 05: TS86	Protection 27D unit 2	
Bit 06: TS87	Protection 27R unit 1	
Bit 07: TS88	Protection 27R unit 2	
Bit 08: TS89	Protection 59 unit 1	
Bit 09: TS90	Protection 59 unit 2	
Bit 10: TS91	Reserved	
Bit 11: TS92	Reserved	
Bit 12: TS93	Protection 59N unit 1	
Bit 13: TS94	Protection 59N unit 2	
Bit 14: TS95	Protection 51V unit 1	
Bit 15: TS96	Reserved	
Word 0C96: TS97 to TS112		
Bit 00: TS97	Protection 67 unit 1	
Bit 01: TS98	Protection 67 unit 2	
Bit 02: TS99	Protection 67N unit 1	
Bit 03: TS100	Protection 67N unit 2	
Bit 04: TS101	Protection 46 unit 1	
Bit 05: TS102	Protection 46 unit 2	
Bit 06: TS103	Protection 47 unit 1	
Bit 07: TS104	Protection 47 unit 2	
Bit 08: TS105	Protection 32P unit 1	
Bit 09: TS106	Protection 32P unit 2	
Bit 10: TS107	Protection 32Q	
Bit 11: TS108	Protection 37	
Bit 12: TS109	Protection 37P unit 1	
Bit 13: TS110	Protection 37P unit 2	
Bit 14: TS111	Protection 40	
Bit 15: TS112	Protection 50BF	

Word 0C97: TS113 to TS128	
Bit 00: TS113	Protection 49RMS – alarm set point
Bit 01: TS114	Protection 49RMS – tripping set point
Bit 02: TS115	Protection 48/51LR (locked rotor)
Bit 03: TS116	Protection 48/51LR (locked rotor at start-up)
Bit 04: TS117	Protection 48/51LR (excessive starting time)
Bit 05: TS118	Protection 66
Bit 06: TS119	Protection 21B
Bit 07: TS120	Reserved
Bit 08: TS121	Reserved
Bit 09: TS122	Reserved
Bit 10: TS123	Reserved
Bit 11: TS124	Protection 64REF unit 1
Bit 12: TS125	Protection 64REF unit 2
Bit 13: TS126	Reserved
Bit 14: TS127	Reserved
Bit 15: TS128	An MSR is currently being recorded
Word 0C98: TS129 to TS144	
Bit 00: TS129	Protection 81H unit 1
Bit 01: TS130	Protection 81H unit 2
Bit 02: TS131	Protection 81L unit 1
Bit 03: TS132	Protection 81L unit 2
Bit 04: TS133	Protection 81L unit 3
Bit 05: TS134	Protection 81L unit 4
Bit 06: TS135	Protection 81R unit 1
Bit 07: TS136	Protection 81R unit 2
Bit 08: TS137	Protection 12 unit 1
Bit 09: TS138	Protection 12 unit 2
Bit 10: TS139	Protection 14 unit 1
Bit 11: TS140	Protection 14 unit 2
Bit 12: TS141	Reserved
Bit 13: TS142	Reserved
Bit 14: TS143	A data log is in progress
Bit 15: TS144	A new Data log file is available (TS maintained for 28 ms)
Word 0C99: TS145 to TS160	
Bit 00: TS145	Protection 38/49T alarm sensor 1 MET148 n° 1
Bit 01: TS146	Protection 38/49T tripping sensor 1 MET148 n° 1
Bit 02: TS147	Protection 38/49T alarm sensor 2 MET148 n° 1
Bit 03: TS148	Protection 38/49T tripping sensor 2 MET148 n° 1
Bit 04: TS149	Protection 38/49T alarm sensor 3 MET148 n° 1
Bit 05: TS150	Protection 38/49T tripping sensor 3 MET148 n° 1
Bit 06: TS151	Protection 38/49T alarm sensor 4 MET148 n° 1
Bit 07: TS152	Protection 38/49T tripping sensor 4 MET148 n° 1
Bit 08: TS153	Protection 38/49T alarm sensor 5 MET148 n° 1
Bit 09: TS154	Protection 38/49T tripping sensor 5 MET148 n° 1
Bit 10: TS155	Protection 38/49T alarm sensor 6 MET148 n° 1
Bit 11: TS156	Protection 38/49T tripping sensor 6 MET148 n° 1
Bit 12: TS157	Protection 38/49T alarm sensor 7 MET148 n° 1
Bit 13: TS158	Protection 38/49T tripping sensor 7 MET148 n° 1
Bit 14: TS159	Protection 38/49T alarm sensor 8 MET148 n° 1
Bit 15: TS160	Protection 38/49T tripping sensor 8 MET148 n° 1
Word 0C9A: TS161 to TS176	
Bit 00: TS161	Protection 38/49T alarm sensor 1 MET148 n° 2
Bit 01: TS162	Protection 38/49T tripping sensor 1 MET148 n° 2
Bit 02: TS163	Protection 38/49T alarm sensor 2 MET148 n° 2
Bit 03: TS164	Protection 38/49T tripping sensor 2 MET148 n° 2
Bit 04: TS165	Protection 38/49T alarm sensor 3 MET148 n° 2
Bit 05: TS166	Protection 38/49T tripping sensor 3 MET148 n° 2
Bit 06: TS167	Protection 38/49T alarm sensor 4 MET148 n° 2
Bit 07: TS168	Protection 38/49T tripping sensor 4 MET148 n° 2
Bit 08: TS169	Protection 38/49T alarm sensor 5 MET148 n° 2
Bit 09: TS170	Protection 38/49T tripping sensor 5 MET148 n° 2
Bit 10: TS171	Protection 38/49T alarm sensor 6 MET148 n° 2
Bit 11: TS172	Protection 38/49T tripping sensor 6 MET148 n° 2
Bit 12: TS173	Protection 38/49T alarm sensor 7 MET148 n° 2
Bit 13: TS174	Protection 38/49T tripping sensor 7 MET148 n° 2
Bit 14: TS175	Protection 38/49T alarm sensor 8 MET148 n° 2
Bit 15: TS176	Protection 38/49T tripping sensor 8 MET148 n° 2

Word 0C9B: TS177 to TS192	
Bit 00: TS177	Reserved
Bit 01: TS178	Reserved
Bit 02: TS179	Reserved
Bit 03: TS180	Reserved
Bit 04: TS181	Reserved
Bit 05: TS182	Reserved
Bit 06: TS183	Reserved
Bit 07: TS184	Reserved
Bit 08: TS185	Thermistor alarm
Bit 09: TS186	Thermistor tripping
Bit 10: TS187	Buchholz alarm
Bit 11: TS188	Buchholz tripping
Bit 12: TS189	Thermostat alarm
Bit 13: TS190	Thermostat tripping
Bit 14: TS191	Pressure alarm
Bit 15: TS192	Pressure tripping
Word 0C9C: TS193 to TS208	
Bit 00: TS193	MET148-1 module sensor fault
Bit 01: TS194	MET148-2 module sensor fault
Bit 02: TS195	Inhibit thermal protection tripping
Bit 03: TS196	Main-phase reverse rotation
Bit 04: TS197	Reserved
Bit 05: TS198	Send blocking signal 2
Bit 06: TS199	Recloser: On
Bit 07: TS200	Recloser: ready
Bit 08: TS201	Recloser: final trip
Bit 09: TS202	Recloser: reclosing successful
Bit 10: TS203	Recloser: cycle 1 in progress
Bit 11: TS204	Recloser: cycle 2 in progress
Bit 12: TS205	Recloser: cycle 3 in progress
Bit 13: TS206	Recloser: cycle 4 in progress
Bit 14: TS207	Recloser: closing by recloser
Bit 15: TS208	Test mode
Word 0C9D: TS209 to TS224	
Bit 00: TS209	Phase CT fault
Bit 01: TS210	Phase VT fault
Bit 02: TS211	Residual VT fault
Bit 03: TS212	Reserved
Bit 04: TS213	Reserved
Bit 05: TS214	Reserved
Bit 06: TS215	Load shedding
Bit 07: TS216	Restart
Bit 08: TS217	Min. V_aux
Bit 09: TS218	Max. V_aux
Bit 10: TS219	Battery low or absent
Bit 11: TS220	Request for synchro-checked closing
Bit 12: TS221	dU synchronization failure
Bit 13: TS222	dPhi synchronization failure
Bit 14: TS223	dF synchronization failure
Bit 15: TS224	Synchronization stop
Word 0C9E: TS225 to TS240	
Bit 00: TS225	Synchronization failure
Bit 01: TS226	Synchronization succesful
Bit 02: TS227	Reserved
Bit 03: TS228	Reserved
Bit 04: TS229	Reserved
Bit 05: TS230	Reserved
Bit 06: TS231	Reserved
Bit 07: TS232	Reserved
Bit 08: TS233	Tripping
Bit 09: TS234	Closing coil monitoring
Bit 10: TS235	Cumulative breaking current monitoring
Bit 11: TS236	Coupling closing order
Bit 12: TS237	Coupling synchronization failure
Bit 13: TS238	Tripping by automatic transfer (AT)
Bit 14: TS239	Discrepancy in the phase rotation direction
Bit 15: TS240	Ethernet communication fault

Zones for Sepam 2000 compatibility

Disturb. rec. identification zone

This zone exists exclusively for address and format compatibility with Sepam 2000. When compatibility is not required, use the directory zone (address 400).



If data files are larger than 64 Kbytes, the number of records is forced to zero. Only the last two records are provided.

Disturb. rec. identification zone	Address	Read	Write	Format	Unit	Config.
Reserved	D204	3	-	-	-	-
Reserved	D205	3	-	-	-	-
Size of set-up files	D206	3	-	16NS	bytes	-
Size of data files	D207	3	-	16NS	bytes	-
Number of records available	D208	3	-	16NS	1	-
Date of record 1 (most recent)	D209/D20C	3	-	IEC		-
Date of record 2	D20D/D210	3	-	IEC		-

Configuration zone

This zone exists exclusively for address and format compatibility with Sepam 2000. It is static and does not depend on the real configuration of the Easergy Sepam series 60 relay.

Configuration zone	Address	Read	Write	Value	Config.
Not used	FC00	3	-	0	-
Easergy Sepam series 60	FC01	3	-	1300 h	-
Not managed	FC02	3	-	0	-
Not managed	FC03	3	-	0	-



Residual current
On Sepam 2000, measured and calculated residual currents are exclusive, i.e. they have the same Modbus address. On Easergy Sepam series 60, the two values may both exist: the compatible address is used for the calculated value and the new address is used for the measured value.

Number of starts / Inhibit time
On Sepam 2000, these two values are exclusive and use the same Modbus address. They are differentiated by the sign. On Easergy Sepam series 60, the two values may both exist, the compatible address is used for the number of starts and the new address is used for the inhibit time.

Metering zone x 1

Metering zone x 1	Address	Read	Write	Format	Unit	Config.
Phase current I1	FA00	3, 4	-	16NS	0.1 A	yes
Phase current I2	FA01	3, 4	-	16NS	0.1 A	yes
Phase current I3	FA02	3, 4	-	16NS	0.1 A	yes
Peak demand current IM1	FA03	3, 4	-	16NS	0.1 A	yes
Peak demand current IM2	FA04	3, 4	-	16NS	0.1 A	yes
Peak demand current IM3	FA05	3, 4	-	16NS	0.1 A	yes
Phase-to-phase voltage U21	FA06	3, 4	-	16NS	1 V	yes
Phase-to-phase voltage U32	FA07	3, 4	-	16NS	1 V	yes
Phase-to-phase voltage U13	FA08	3, 4	-	16NS	1 V	yes
Frequency f	FA09	3, 4	-	16NSA	0.01 Hz	yes
Active power P	FA0A	3, 4	-	16O	1 kW	yes
Reactive power Q	FA0B	3, 4	-	16O	1 kvar	yes
Power factor cos φ	FA0C	3, 4	-	16O	0.01	yes
Peak demand active power PM	FA0D	3, 4	-	16NS	1 kW	yes
Peak demand reactive power QM	FA0E	3, 4	-	16NS	1 kvar	yes
Residual current I0Σ	FA0F	3, 4	-	16NS	0.1 A	yes
T1: temperature 1 MET n° 1	FA10	3, 4	-	16O	1°C	yes
T2: temperature 2 MET n° 1	FA11	3, 4	-	16O	1°C	yes
T3: temperature 3 MET n° 1	FA12	3, 4	-	16O	1°C	yes
T4: temperature 4 MET n° 1	FA13	3, 4	-	16O	1°C	yes
T5: temperature 5 MET n° 1	FA14	3, 4	-	16O	1°C	yes
T6: temperature 6 MET n° 1	FA15	3, 4	-	16O	1°C	yes
T7: temperature 7 MET n° 1	FA16	3, 4	-	16O	1°C	yes
T8: temperature 8 MET n° 1	FA17	3, 4	-	16O	1°C	yes
T9: temperature 1 MET n° 2	FA18	3, 4	-	16O	1°C	yes
T10: temperature 2 MET n° 2	FA19	3, 4	-	16O	1°C	yes
T11: temperature 3 MET n° 2	FA1A	3, 4	-	16O	1°C	yes
T12: temperature 4 MET n° 2	FA1B	3, 4	-	16O	1°C	yes
Thermal capacity used	FA1C	3, 4	-	16NS	%	yes
Number of starts	FA1D	3, 4	-	16NS	1	yes
Reserved	FA1E	3, 4	-	-	-	-
Reserved	FA1F	3, 4	-	-	-	-
Reserved	FA20	3, 4	-	-	-	-
Reserved	FA21	3, 4	-	-	-	-
Phase-to-neutral voltage V1	FA22	3, 4	-	16NS	1 V	yes
Phase-to-neutral voltage V2	FA23	3, 4	-	16NS	1 V	yes
Phase-to-neutral voltage V3	FA24	3, 4	-	16NS	1 V	yes
Residual voltage V0	FA25	3, 4	-	16NS	1 V	yes
Residual current I0	FA26	3, 4	-	16NS	0.1 A	yes
Reserved	FA27	3, 4	-	-	-	-
Reserved	FA28	3, 4	-	-	-	-
Reserved	FA29	3, 4	-	-	-	-
Reserved	FA2A	3, 4	-	-	-	-
Reserved	FA2B	3, 4	-	-	-	-
Reserved	FA2C	3, 4	-	-	-	-
Reserved	FA2D	3, 4	-	-	-	-
Reserved	FA2E	3, 4	-	-	-	-
Inhibit time	FA2F	3, 4	-	16NS	1 min.	yes

Addresses in direct-access mode

Residual current
On Sepam 2000, measured and calculated residual currents are exclusive, i.e. they have the same Modbus address. On Easergy Sepam series 60, the two values may bothexist: the compatible address is used for the calculated value and the new address is used for the measured value.

Metering zone x 10

Metering zone x 10	Address	Read	Write	Format	Unit	Config.
Phase current I1	FB00	3, 4	-	16NS	1 A	yes
Phase current I2	FB01	3, 4	-	16NS	1 A	yes
Phase current I3	FB02	3, 4	-	16NS	1 A	yes
Peak demand current IM1	FB03	3, 4	-	16NS	1 A	yes
Peak demand current IM2	FB04	3, 4	-	16NS	1 A	yes
Peak demand current IM3	FB05	3, 4	-	16NS	1 A	yes
Phase-to-phase voltage U21	FB06	3, 4	-	16NS	10 V	yes
Phase-to-phase voltage U32	FB07	3, 4	-	16NS	10 V	yes
Phase-to-phase voltage U13	FB08	3, 4	-	16NS	10 V	yes
Frequency f	FB09	3, 4	-	16NSA	0.1 Hz	yes
Active power P	FB0A	3, 4	-	16O	10 kW	yes
Reactive power Q	FB0B	3, 4	-	16O	10 kvar	yes
Power factor cos φ	FB0C	3, 4	-	16O	0.01	yes
Peak demand active power PM	FB0D	3, 4	-	16NS	10 kW	yes
Peak demand reactive power QM	FB0E	3, 4	-	16NS	10 kvar	yes
Residual current I0Σ	FB0F	3, 4	-	16NS	1 A	yes
Last tripping current Itrip1	FB10	3, 4	-	16NS	10 A	yes
Last tripping current Itrip2	FB11	3, 4	-	16NS	10 A	yes
Last tripping current Itrip3	FB12	3, 4	-	16NS	10 A	yes
Last tripping current Itrip0	FB13	3, 4	-	16NS	1 A	yes
Reserved	FB14	3, 4	-	-	-	-
Reserved	FB15	3, 4	-	-	-	-
Reserved	FB16	3, 4	-	-	-	-
Phase-to-neutral voltage V1	FB17	3, 4	-	16NS	10 V	yes
Phase-to-neutral voltage V2	FB18	3, 4	-	16NS	10 V	yes
Phase-to-neutral voltage V3	FB19	3, 4	-	16NS	10 V	yes
Reserved	FB1A	3, 4	-	-	-	-
Reserved	FB1B	3, 4	-	-	-	-
Reserved	FB1C	3, 4	-	-	-	-
Residual voltage V0	FB1D	3, 4	-	16NS	10 V	yes
Reserved	FB1E	3, 4	-	-	-	-
Reserved	FB1F	3, 4	-	-	-	
Reserved	FB20	3, 4	-	-	-	
Reserved	FB21	3, 4	-	-	-	
Reserved	FB22	3, 4	-	-	-	
Residual current I0	FB23	3, 4	-	16NS	1 A	yes
Reserved	FB24	3, 4	-	-	-	-

Compact zone

Compact zone	Address	Read	Write	Format	Unit	Config.
Phase current I1 (x 1)	FB80	3, 4	-	16NS	0.1 A	-
Phase-to-phase voltage U21 (x 1)	FB81	3, 4	-	16NS	1 V	-
Active power P (x 1)	FB82	3, 4	-	16O	1 kW	-
Reactive power Q (x 1)	FB83	3, 4	-	16O	1 kvar	-
Sepam check-word (copy)	FB84	3, 4	-	B	-	-
TS1-TS16	FB85	3, 4	-	B	-	-
TS17-TS32	FB86	3, 4	-	B	-	-
TS33-TS48	FB87	3, 4	-	B	-	-
TS49-TS64	FB88	3, 4	-	B	-	-
Logic inputs I101 to I114	FB89	3, 4	-	B	-	-
Logic inputs I201 to I214	FB8A	3, 4	-	B	-	-
Reserved	FB8B	3, 4	-	-	-	-
Reserved	FB8C	3, 4	-	-	-	-
Reserved	FB8D	3, 4	-	-	-	-
Reserved	FB8E	3, 4	-	-	-	-
Reserved	FB8F	3, 4	-	-	-	-

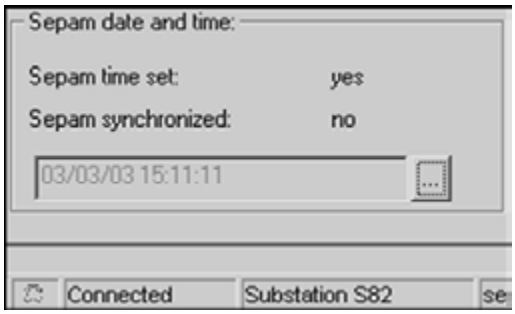

SFT2841: date and time on the "Sepam diagnosis" screen.

Presentation

Sepam manages the date and time internally. If auxiliary power is lost, the date and time function continues to operate, on the condition that a charged battery was installed.
The Sepam internal time function is used in particular to date alarms and other records.
Sepam time can be viewed:
- with SFT2841, "Sepam diagnosis" screen
- on the Sepam display
- by a Modbus read of the synchronization zone.

Sepam also supplies in the check-word the indication "Sepam time not correct" if it is necessary to reset the time (often the case when the battery is low or absent). This information can also be viewed with SFT2841, on the "Sepam diagnosis" screen.

Time setting

When Sepam is energized, the time is automatically set using the clock powered by the backup battery, if the battery is charged.
When necessary, it is possible to set the time on the Sepam using:
- SFT2841 ("Sepam diagnosis" screen)
- Sepam User Machine Interface
- Serial Modbus communication (COM1)
- Modbus/TCP or SNTP (Ethernet)

Modbus time is set by writing, in a single block, the new value for the date and time in the synchronization zone (time frame).

Synchronization

To ensure long-term time stability or to coordinate a number of devices, it is possible to synchronize Sepam relays.
A number of synchronization sources are accepted:
- none (synchronization inhibited)
- a pulse to logic input I103 (minimum duration: 15 ms)
- Modbus communication on COM1
- Ethernet (Modbus or SNTP)

The source is selected using the SFT2841 software, on the "General characteristics" screen.
Non-synchronous status is indicated in the check-word. This information can also be viewed with SFT2841, on the "Sepam diagnosis" screen.
When Sepam is synchronized, time setting is authorized only by sources that are compatible with the synchronization.

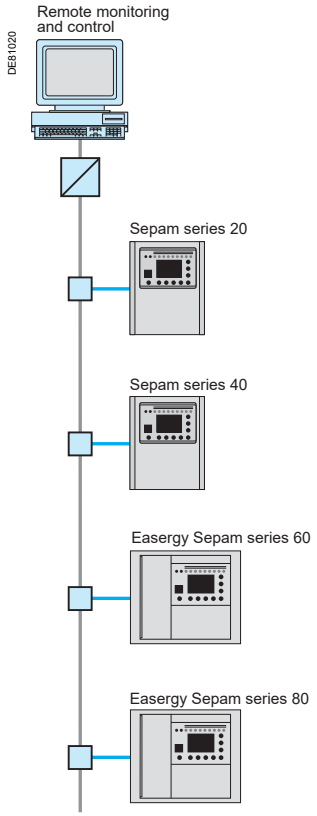

Synchronization of the Sepam clock by the communication network.

Time setting	Synchronization source			
	None	COM1	Ethernet	I103
Local	■			
Via COM1	■	■		■
Via Ethernet	■		■	■

Synchronization by the Modbus communication link

The time frame is used for both time setting and synchronization of Sepam. In this case, it must be regularly sent at brief intervals (between 10 and 60 seconds) to maintain synchronous time.
It is generally broadcast (slave number = 0).
The Sepam internal clock is reset each time a new time frame is received.
Synchronization is maintained if the reset amplitude is less than 100 milliseconds.
If the reset amplitude is higher for 3 consecutive frames or if a single frame is received with a reset amplitude higher than 4 seconds then Sepam will switch to loss of synchronism status.
With synchronization via the Modbus network, accuracy depends on the master and its control over frame transmission time on the communication network. Sepam is synchronized without delay at the end of the receipt of the frame.
Time changes are made by sending a frame to Sepam with the new date and time. Sepam then switches to a transitional non-synchronous status.
In synchronous status, non-reception of a time frame for over 200 seconds results in the loss of synchronization.

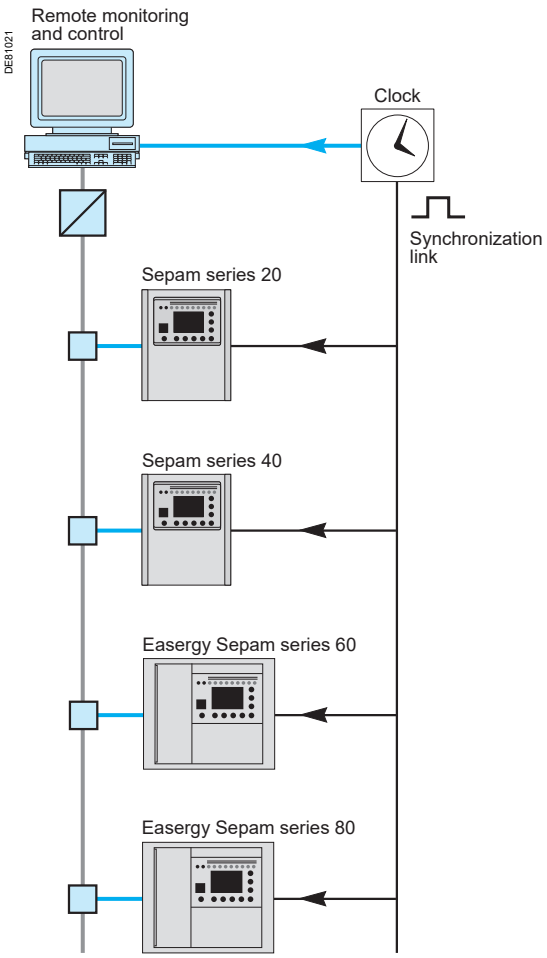

External synchronization of the Sepam clock by sending a synchronization pulse to a logic input.

Pulse synchronization

Sepam can be synchronized externally by sending a periodic pulse (synchronization pulse) to logic input I103 (the MES120 module is required).
The pulse is used to reset the Sepam internal clock. Synchronization is carried out on the rising edge of the logic input.
Sepam adapts to synchronization periods from 10 to 60 seconds, in 10-second steps. The shorter the period, the more accurate the time setting.
When energized (or following a loss of synchronization), Sepam is in "non-synchronous" mode. The resetting process (switching of Sepam to "synchronous" mode) is based on a measurement of the difference between Sepam current time and the nearest ten-second period. This measurement is taken when the pulse is received following time setting. Resetting is authorized if the difference is less than or equal to 4 seconds. In this case, Sepam shifts to "synchronous" mode.
Subsequently (after switching to "synchronous" mode), the resetting process is based on the measurement of a difference (between Sepam current time and the nearest ten second period when the pulse is received), which is adapted to match the pulse period.

The pulse period is determined automatically by Sepam when it is energized, based on the first two pulses received. The pulse must be operational before Sepam is energized.
Synchronization operates only after Sepam has been time-set, i.e. after the "incorrect time" end event.

Any time changes greater than ± 4 seconds are made by sending a new time frame. The switch from summer time to winter time (and back) is made in this way as well. There is a temporary loss of synchronization when the time is changed.
Synchronization is lost if:
- the difference in synchronization between the closest 10-second period and pulse reception is greater than the synchronization error for two consecutive pulses
- the pulse is not received for a period longer than 200 seconds.

Synchronization-pulse characteristics

Electrical characteristics
They are identical to those for MES120 module inputs.

Time characteristics
Period: 10 to 60 seconds, in 10-second steps
State 1 minimum duration: 100 ms
State 0 minimum duration: 100 ms

Synchronization clock

The external synchronization mode requires additional equipment, a "synchronization clock " to generate a precise periodic synchronization time pulse.
Schneider Electric has tested the following products:
Gorgy Timing, part no. RT3000, equipped with the M540 module

Presentation

The time-tagging function assigns a date and precise time to status changes (events) so that they can be accurately organized over time.
Time-tagging is systematic and concerns:
- logic inputs
- remote indications
- certain information pertaining to Sepam equipment (see Sepam check-word).

Events may be used by a remote monitoring and control system for data logging and histories, for example.
The remote monitoring and control system provides a chronological display of the time-tagged data.

Description

Time-tagging

Event time-tagging uses the Sepam internal clock. When an event is detected, it is tagged with the current Sepam time.
Time-tagging accuracy depends essentially on how well the Sepam internal clock is synchronized (see the section on time setting and synchronization).

Inhibition in Test mode

Test mode may be used to temporarily stop the transmission of all time-tagged events when remote operation of the installation is not to be disturbed by maintenance operations carried out on the electrical equipment. This mode may be accessed via mimic-based UMIs by turning the key-switch.

When Sepam enters Test mode, it:
- transmits remote-indication TS208 "Test mode" with a value of 1
- interrupts the transmission of all time-tagged events.

When Sepam leaves Test mode, it transmits remote-indication TS208 "Test mode" with a value of 0.
Time-tagged events can be transmitted again. Status changes that take place in Test mode are permanently lost.

Event queues

Sepam has four internal storage queues (two per communication port) with a capacity of 64 events. Each queue is independent.
If one queue is full (63 events already recorded), a "**data loss**" event is generated in the 64th position and the queue no longer receives event data. The other queues are not affected and continue to receive any new detected events.
When a queue in "data loss" status is completely emptied, a "data loss" end event is generated and the queue then receives any detected events.

For each event queue of a Modbus port, the check-work contains certain information:
- presence of an event: indicates that there is at least one event that has not been read in the corresponding queue
- data loss: indicates that the queue is in "data loss" status (full).

Initialization

Each time Sepam is initialized (energized), events are generated in the following order:
- "data loss"
- "not synchronous"
- end of "data loss".

The "time not correct" event may also appear if there is no battery.
The function is initialized with the current values of the remote indication and logic input status without creating any events related to those data. After the initialization phase, event detection is activated.



Reading must address only the exchange word, or the entire table.

Reading of events

Two Modbus tables are used to read the corresponding queues of events, in groups of four maximum, using a specific protocol to make sure no events are lost, even if communication problems occur.

Event tables	Addr. table 1	Addr. table 2	Read	Write	Config.
Exchange word	0040	0070	3	6, 16	-
Event 1	0041/0048	0071/0078	3	-	-
Event 2	0049/0050	0079/0080	3	-	-
Event 3	0051/0058	0081/0088	3	-	-
Event 4	0059/0060	0089/0090	3	-	-

Exchange word

It is used to check event reading. It consists of the elements below.

Bit	*15*	*14*	*13*	*12*	*11*	*10*	*9*	*8*	*7*	*6*	*5*	*4*	*3*	*2*	*1*	*0*
	Exchange number 0…255								Event number 0…4							

The exchange number is initialized to zero when Sepam is energized and is incremented for each transfer of a new set of events. When it reaches its maximum value (FFh), it automatically goes back to zero.
Sepam numbers the exchanges and the master acknowledges the numbering.
The event number indicates the number of significant events are truly present in the table. The remainder of the table is less significant.

Event table acknowledgment

Following correct reception of the set of events, the master must acknowledge the exchange by writing an exchange word with:
- "Exchange number" field: number of the last exchange carried out
- "Event number" field: set to zero.

The acknowledged events are then cleared from the Sepam queue. If there are other events, they are made available in the table and the exchange number is incremented.
As long as an exchange is not acknowledged, the table remains as is and it is possible to read it again.
If acknowledgment is incorrect (incorrect value for the exchange word), it is not taken into account and the table remains as is.

Clearing an event queue

Writing a value "xxFFh" in the exchange word (any exchange number, event number = FFh) reinitializes the corresponding event queue (all stored events not yet transmitted are deleted).

Description of event coding

An event is coded in 8 words with the following structure:

Word	Information	Coding
1	Type of event	0800 h
2	Event address	Bit address (see inputs, TS, check-word)
3	Reserved	0
4	Event direction	0: falling edge 1: rising edge
5 to 8	Event time	IEC

Presentation

Sepam records different types of data:
- disturbance recording
- tripping contexts
- out-of-sync context
- data log
- motor start report
- motor start trend

The list of available records may be read in the corresponding directory zones.
Two Modbus transfer zones per port recover records using a specific protocol ensuring correct transfer, even if communication problems occur.

Transfer

Transfer is carried out in the same manner for all types of records. Given the volume of data, it is transferred in blocks that are compatible in size with Modbus frames.
To make a transfer, the master:
- determines the list of available records by reading the directory zone
- selects the desired record
- waits until it is available and recovers the first block of data, using the exchange word to ensure correct synchronization
- acknowledges block transfer
- repeats reading and acknowledgment until all the blocks have been received
- reads the directory zone again to check that the record was not overwritten during transfer.

A record may be transferred as many times as desired, until it is overwritten by a new record. If a record is made by Sepam while the oldest record is being transferred, the oldest record is overwritten.
Selection of a new record while a transfer is in progress interrupts the transfer.

Transfer zones

Each transfer zone comprises a zone for record selection and a zone reading record data.

Selection zone

Record transfer is initiated by writing the record identifier to this zone.

Selection	Addr. zone 1	Addr. zone 2	Read	Write	Config.
Word 1	2200	D200	3	16	-
Word 2	2201	D201	3	16	-
Word 3	2202	D202	3	16	-
Word 4	2203	D203	3	16	-

The zone should be written in a single block containing 4 words, using function 16 (write word).
Sepam capacity for simultaneous transfers is limited. If Sepam cannot handle the request, a type 07 exception reply is sent. In this case, a new request must be made later.

Record identifier

The records to be transferred are identified by their date as indicated in the directory zone, with an indicator in the most-significant byte of word 1:
0: disturbance recording
1: tripping contexts
2: out-of-sync context.
3: data log
4: motor start report
5: motor start trend.

Bit	*15*	*14*	*13*	*12*	*11*	*10*	*9*	*8*	*7*	*6*	*5*	*4*	*3*	*2*	*1*	*0*
Word 1	**Type of record**															
Word 2	Date of record															
Word 3	(IEC)															
Word 4																



The record transfer is reset if more than 2 seconds elapse between consecutive data read operations.

Data read zone

Record data are made available in this zone.

Data reading	Addr. zone 1	Addr. zone 2	Read	Write	Config.
Exchange word	2300	D300	3	6, 16	-
Data word 1	2301	D301	3	-	-
Data word 2	2302	D302	3	-	-
...	...	...	3	-	-
Data word 124	237C	D37C	3	-	-

Reading must always begin at the beginning of the zone (exchange word). The data bytes not included in the significant information (see the section on the exchange word) do not contain significant values.

Exchange word

It is used to check data reading. It consists of the elements below.

Bit	*15*	*14*	*13*	*12*	*11*	*10*	*9*	*8*	*7*	*6*	*5*	*4*	*3*	*2*	*1*	*0*
	Exchange number 0…255								Number of usable bytes 0…248							

The exchange number is initialized to zero when Sepam is energized and is incremented for each transfer of a new block of data. When it reaches its maximum value (FFh), it automatically goes back to zero.
Sepam numbers the exchanges and the master acknowledges the numbering.
The number of bytes indicates the usable size of the data zone. It is initialized to zero after an energizing operation and varies between 0 and 248 (F8h).
The exchange word may also have the following values:
- **0000h:** no "read request" has yet been made. This is especially the case when Sepam is energized. The other data words are not significant.
- **FFFFh:** the "read request" has been processed, but the results are not yet available in the read zone. It is necessary to read again later.
- **xxFEh:** the transfer has been cancelled or the record number is not known.

Reading acknowledgment

Following correct reception of the block of data, the master must acknowledge reading by writing an exchange word with:
- "Exchange number" field: number of the last exchange carried out
- "Number of bytes" field: set to zero.

If transfer of the record is not finished, the exchange word is reset to FFFFh while the next block of data is prepared, otherwise the exchange word is not modified.
As long as a read has not been acknowledged, the zone remains as is and it is possible to read it again.
If acknowledgment is incorrect (incorrect value for the exchange word), it is not taken into account and the zone remains as is.

Note: *It is not necessary to acknowledge tripping contexts or out-of-sync contexts which are contained in a single block.*

Data coding

Disturbance recording

Each record comprises two files as defined by the COMTRADE standard:
- configuration file (.CFG)
- data file (.DAT) in binary mode.

Because the configuration and data files are transferred together, a block may contain the end of the configuration file and the beginning of the data file of a record. It is up to the remote monitoring and control system to reconstruct the files in accordance with the transmitted number of usable bytes and the size of the files indicated in the directory zone.

Tripping contexts

Word	Information	Format	Unit
00	(exchange word)		
01 to 04	Context date	IEC	-
05/06	Tripping current phase 1 Itrip1	32NS	0.1 A
07/08	Tripping current phase 2 Itrip2	32NS	0.1 A
09/0A	Tripping current phase 3 Itrip3	32NS	0.1 A
0B/0C	Residual current I0Σ	32NS	0.1 A
0D/0E	Residual current I0	32NS	0.1 A
0F/10	Negative-sequence current Ii	32NS	0.1 A
11/12	Phase-to-phase voltage U21	32NS	1 V
13/14	Phase-to-phase voltage U32	32NS	1 V
15/16	Phase-to-phase voltage U13	32NS	1 V
17/18	Phase-to-neutral voltage V1	32NS	1 V
19/1A	Phase-to-neutral voltage V2	32NS	1 V
1B/1C	Phase-to-neutral voltage V3	32NS	1 V
1D/1E	Residual voltage V0	32NS	1 V
1F/20	Positive sequence voltage Vd	32NS	1 V
21/22	Negative-sequence voltage Vi	32NS	1 V
23/24	Frequency f	32NS	0.01 Hz
25/26	Active power P	32S	1 kW
27/28	Reactive power Q	32S	1 kvar
29/2A	Apparent power S	32S	1 kVA
2B/4A	Reserved	-	-
4B/4C	Neutral point voltage Vnt	32NS	1 V
4D/5C	Reserved	-	-
5D/5E	Phase rotation direction	32NS	0 = 123 1 = 132

Out-of-sync context

Word	Information	Format	Unit
00	(exchange word)		
01 to 04	Context date	IEC	-
05/06	Voltage difference dU	32NS	0,1 % de Uns Sync1
07	Frequency difference df	16NS	0.001 Hz
08	Phase difference dφ	16NS	0.1°

Access to remote settings

Presentation

Access to Sepam settings via Modbus communication allows the user to remotely:
- read settings remotely (remote reading)
- modify settings remotely (remote setting), if it has been authorized.

Two Modbus zones per port offer access to the settings, using a specific protocol.

Accessible functions

Remote reading of settings concerns:
- all protection and similar functions
- the main Sepam general parameters.

Remote setting concerns exclusively the protection and similar functions.

Inhibiting remote setting

It is possible to inhibit the remote-setting function using a configuration parameter accessible via SFT2841. In the default set-up (factory settings), the remote-setting function is inhibited.

Inhibition of remote setting also concerns the SFT2841 connected to Modbus communication ports. When remote setting is inhibited, only the SFT2841 locally connected to Sepam can modify settings and parameters.

Security

It is possible to protect the remote-setting zone against writing, see the section on security.

Operating principle

Remote setting reading

For remote setting reading, the master:
- selects the function whose settings are requested (write in the request zone)
- waits until it is available and recovers the setting values, using the exchange word to ensure correct synchronization (read the setting read zone).

Remote setting

For remote setting, the master:
- selects the function whose settings are to be modified remotely and provides the list of new settings (write in the remote-setting zone)
- waits until processing is finished and recovers the accepted setting values, using the exchange word to ensure correct synchronization (read the setting read zone)
- checks that the settings have been accepted and processes any refusals.

It is necessary to make all the settings for the function concerned, even if some of them have not changed.

NOTICE

HAZARD OF IMPROPER OPERATION

- The device must only be configured and set by qualified personnel, using the results of the installation protection system study.
- During commissioning of the installation and after any modification, check that the Sepam configuration and protection function settings are consistent with the results of this study.

Failure to follow these instructions can result in equipment damage

Setting access zones

Each setting-access zone includes a zone to select the function whose settings are requested, a zone to read the settings of the selected function and a zone to write the settings.

Selection zone for setting requests

A setting read is initiated by writing the function identifier to this zone.

Setting request	Addr. zone 1	Addr. zone 2	Read	Write	Config.
Function identifier	2080	D080	3	6, 16	-

Function identification

Each function is identified by a function code, with a unit number (protection) or a subcode (other functions). A list of the function codes is provided in the appendices, no other values are valid.

Bit	*15*	*14*	*13*	*12*	*11*	*10*	*9*	*8*	*7*	*6*	*5*	*4*	*3*	*2*	*1*	*0*
	Function code								Unit number or subcode							

Exception replies

In addition to the usual cases, Sepam can send Modbus type 07 exception replies (not acknowledged) if another remote reading (or remote setting) request is being processed.

Setting read zone

Setting values are made available in this zone.

Writing settings	Addr. zone 1	Addr. zone 2	Read	Write	Config.
Function reference	2000	D000	3	-	-
Setting 1	2001/2002	D001/D002	3	-	-
Setting 2	2003/2004	D003/D004	3	-	-
...	...	...	3	-	-
Setting 62	207B/207C	D07B/D07C	3	-	-

Reading must always begin at the beginning of the zone (exchange word). The length of the exchange may concern:

- the exchange word only (validity test)
- the maximum size of the zone (125 words)
- the usable size of the zone (determined by the function being addressed).

Exchange word

It is used to check the reading of the settings and can have the following values:

- **xxyy:** where
  - function code **xx** is not 00 or FFh
  - unit number or subcode **yy** is not FFh.

The requested settings are available in the words below. The word is a copy of the request. The zone contents remain valid until the next request is made.

- **FFFFh:** the request has been processed, but the results are not yet available. It is necessary to read again later. The other words are not significant.
- **xxFFh:** where the function code **xx** is not 00 or FFh. The read request for the settings of the designated function is not valid. The function (or the unit) does not exist for this Sepam.
- **0000h**: no "request frame" has yet been formulated. This is especially the case when Sepam is energized. The other words are not significant.

Settings

All settings are 32 bits in length (two Modbus words). They are specific to each function and are described in the appendices.

Remote-setting zone

The new setting values are written in this zone.

Read settings	Addr. zone 1	Addr. zone 2	Read	Write	Config.
Function identifier	2100	D100	3	16	-
Setting 1	2101/2102	D101/D102	3	16	-
Setting 2	2103/2004	D103/D104	3	16	-
...	...	...	3	16	-
Setting 61	2179/217A	D179/D17A	3	16	-

Writing must always begin at the beginning of the zone.

Function identifier

It is identical to that used to read the settings.

Settings

All settings are 32 bits in length (two Modbus words). They are specific to each function and are described in the appendices.

Exception reply

In addition to the usual cases, Sepam can send type 07 exception replies (not acknowledged) if:

- another remote reading or setting request is being processed
- the remote setting function is inhibited
- Sepam is being set locally (SFT2841 or UMI).

Check on setting acceptance

After processing the remote-setting zone, Sepam updates the read zone with the current function settings. In this case, the exchange word may also have another value:

- **FFFEh** meaning that the settings have been refused. Certain values are incorrect and are replaced by 7FFFFFFFh in the read zone.

Customized table

Presentation

To reduce the number of Modbus exchanges required by the master to collect the most frequently used information (and the bandwidth used on the network), a customized table can be set up on each communication port of Easergy Sepam series 60. This table is defined via Modbus, using a configuration table.

Use

Configuration table

Configuration table	Address	Read	Write	Config.
Identifier	2680	3	16	-
Address datum 1	2681	3	16	-
Address datum 2	2682	3	16	-
...	...	3	16	-
Address datum 124	26FC	3	16	-

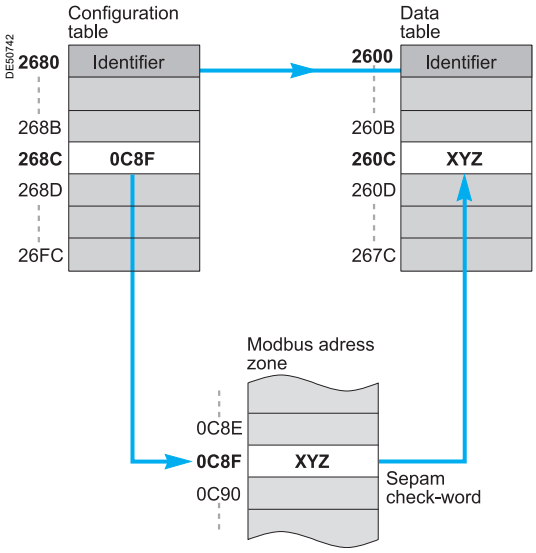

Example: *by writing 0C8F to 268C, the result at 260C is a copy of the contents at address 0C8F (check-word).*

Writing the configuration table

This function is used to configure the data table. The first word in the configuration table is used as the configuration identifier. It is copied as is in the first word of the data table. The identifier can have any value, except 0. If the identifier is set to 0, table configuration is cancelled.

The identifier enables masters to generate a number of typical configurations and to check which is active. It is also the means to check that no other master has modified the active configuration. This requires concerted management between the masters.

Each other word in the table contains the Modbus address of the datum that should be set up in the corresponding spot in the data table (0 if the position is not used).

Only certain Modbus addresses can be set up in these tables. The valid addresses are indicated in this document by "yes" in the "Config." column in the descriptions.

It is possible to write the table in part or in whole from any address. When 125 words are used (the maximum size of the data table), at least two writings are required to fill the configuration table because the maximum size of a Modbus write is 123 words.

Reading the configuration table

This function is used to read and check the configuration of the data table. Each address word can have one of the following values:

- 0000: position not used
- FFFFh: invalid address
- Address: address correctly configured.

It is possible to read the zone in part or in whole from any address.

Data table

Data table	Address	Read	Write	Config.
Identifier	2600	3	-	-
Datum 1	2601	3	-	-
Datum 2	2602	3	-	-
...	...	3	-	-
Datum 124	267C	3	-	-

Reading the data table

This function is used to read the data set up at the corresponding position.

The validity of the datum is indicated in the configuration table.

It is possible to read the table in part or in whole from any address.

Exception replies

Sepam sends a Modbus type 07 exception reply (not acknowledged) if the data table has not been set up. This may occur in the following cases:

- the table was never set up
- the table was set up, but one or more addresses are incorrect

The configuration table can be read again to identify the addresses in question;

- the configuration was cancelled (the identifier was set to 0)
- the configuration was lost (Sepam de-energized). In this case, it must be reloaded.

Caution*: configuration takes place one Modbus word after the other. For a 32-bit value, it is necessary to provide the two successive addresses of the value. (This characteristic may be used to switch the order of words if there is a compatibility problem with the 32-bit format. It is also possible to use only the least-significant part of the 32-bit values if the range is sufficient for the given application.)*

Presentation

With Sepam, it is possible to protect remote controls and remote settings using a password.
Password protection of remote control and settings must be activated in the SFT2841 software.
Two different passwords are required:
- one password for the remote controls
- one password for the remote settings

thus offering differentiated access.
The ON/OFF status of the security function is given by bit 01 of the Sepam check-word.

Implementation

The security function uses an extension of the Modbus protocol that encapsulates the standard remote-control and remote-setting frames in a special frame.

Request frames

The request frame is made of the following components.

Field	*Size (bytes)*	
Slave number	1	
102 (66h)	1	*Security function code*
00	1	*Security version*
0000	2	*Reserved*
xxxx	2	*Password (BCD coding)*
Standard function code	1	
Standard frame data ...	n	***Encapsulated standard frame***
CRC16	2	

The standard function codes that can be used in the request are the codes accepted for writing to the corresponding addresses, i.e. 6 and 16 for words and 5 and 15 for bits.
The security function does not affect reading.
The indicated password is the one created with SFT2841, for the given zone. It is a 16-bit BCD code (e.g. the entered password is 1234, the value in the Modbus field is 1234h).

Reply frames

The standard reply frame is also encapsulated, with a reduced header.

Field	*Size (bytes)*	
Slave number	1	
102 (66h)	1	*Security function code*
00	1	*Security version*
Standard function code	1	
Standard reply ...	n	***Encapsulated standard reply***
CRC16	2	

Exception replies

Security-function (access control) exceptions
When the security function is enabled on Sepam, request 102 must be used to access Sepam's protected data.
If a non-secure request is used, a standard exception reply 02 (incorrect data addresses) is sent to indicate that the requested data cannot be accessed.
When request 102 is used, a security-function exception reply 80 can be sent to indicate access refused in the following two cases:
- Incorrect security level (the level asked for in the request is not 00)
- Incorrect password

Standard-function (encapsulated) exceptions
When access control has been negotiated successfully, the reply to request 102 can encapsulate a standard exception reply, as described for replies associated with Modbus standard function codes.

Examples

Secure writing using function 16 (write word) of value 9999h to Modbus address ABCDh on slave 3.

Request frames

03	*Slave*
66	*Security function code*
00	*Version*
0000	*Reserved*
1234	*Password*
10	*Write-word function code*
ABCD	*Address*
0001	*Number of words to be written*
02	*Number of bytes*
9999	*Value to be written*
xxxx	*CRC16*

Normal reply frames

03	*Slave*
66	*Security function code*
00	*Version*
10	*Write-word function code*
0001	*Number of words written*
xxxx	*CRC16*

Exception frames

Write-word function exception: it is not possible to write to the given address.

03	*Slave*
66	*Security function code*
00	*Version*
90	*Write-word exception (10 + 80)*
02	*Incorrect address*
xxxx	*CRC16*

Security exception: incorrect password

03	*Slave*
E6	*Security exception (66 + 80)*
80	*Access refused*
xxxx	*CRC16*

Reading Sepam identification

Presentation

The "Read Device Identification" function provides standardized access to the information required to clearly identify a device.
The description is made up of a set of objects (ASCII character strings).
Easergy Sepam series 60 accepts the "read identification" function (conformity level 02).
For a complete description of the function, refer to **www.modbus.org**. The description below covers a subset of the function, adapted to Easergy Sepam series 60.

Implementation

Request frame

The request frame is made of the following components.

Field	*Size (bytes)*	
Slave number	1	
43 (2Bh)	1	*Generic access function code*
14 (0Eh)	1	*Read device identification*
01 or 02	1	*Type of read*
00	1	*Object number*
CRC16	2	

The type of read is used to select a simplified (01) or a standard (02) description.

Reply frame

The reply frame is made of the following components:

Field	*Size (bytes)*	
Slave number	1	
43 (2Bh)	1	*Generic access function code*
14 (0Eh)	1	*Read device identification*
01 or 02	1	*Type of read*
02	1	*Conformity level*
00	1	*Continuation-frame flag (none for Sepam)*
00	1	*Reserved*
n	1	*Number of objects (according to read type)*
0bj1	1	*Number of first object*
lg1	1	*Length first object*
txt1	lg1	*ASCII string of first object*
.....	...	
objn	1	*Number n^{th} object*
lgn	1	*Length n^{th} object*
txtn	lgn	*ASCII string of nth object*
CRC16	2	

Exception frame

If an error occurs during request processing, a special exception frame is sent.

Field	*Size (bytes)*	
Slave number	1	
171 (ABh)	1	*Generic access exception (2Bh + 80h)*
14 (0Eh)	1	*Read device identification*
01	1	*Type of error*
CRC16	2	

Easergy Sepam series 60 identification

The objects making up the Easergy Sepam series 60 identification are listed below.

Number	Type	Value
0:	VendorName	"Merlin Gerin" or "Schneider Electric"
1:	ProductCode	Application EAN13 code
2:	MajorMinorRevision	Application version number (Vx.yy)
3:	VendorURL	"www.schneider-electric.com"
4:	ProductName	"Easergy Sepam series 60
5:	ModelName	Application name (e.g. "M61 Motor")
6:	UserAppName	Sepam marking

The simplified description includes only objects 0 to 2.

Appendix 1. Modbus protocol

Introduction

This appendix describes the Modbus protocol and the functions required for Modbus communication with Sepam. It is not intended to present the entire protocol.

Presentation

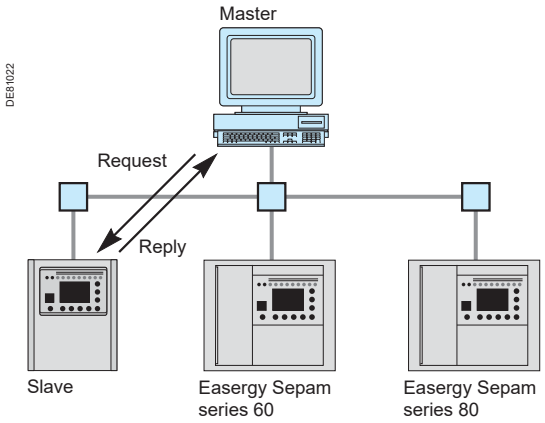

Modbus is a master-slave network.

Exchanges

The Modbus protocol exchanges information using a request-reply mechanism between a master and a slave.
An exchange is always initiated (request sent) by the master. The only action on the part of a slave is to reply to requests received.
Where the communication network permits, several slaves units can be connected to a single master. A request contains the slave address (a unique number) to identify the recipient. Non-addressed slaves disregard the requests received.

Modbus Protocol Data Unit

Every Modbus request or response frame includes a Modbus PDU (protocol data unit) made up of 2 fields.

Function code	Data

- function code (1 byte): indicates the type of request (1 to 127)
- data (0 to n bytes): depends on the function code, see below.

If there is no error, the function codes in the reply and in the request are identical.

Modbus data types

Modbus uses 2 types of data: bits and 16-bit words (also called registers).
Each element of data is identified by a 16-bit address.
The most-significant byte in 16-bit words is always sent first, for both data and addresses.

Serial line Modbus

This description is limited to the Modbus protocol using a serial link in binary mode (RTU mode).

Frames

All the frames exchanged have the same structure, made up of 3 parts.

Slave address	Modbus PDU	Check (CRC16)

- Slave address (1 byte): from 1 to 247 (0 for broadcasting)
- Modbus PDU: as previously described
- Check (2 bytes): CRC16 used to check frame integrity.

The slave addresses in the reply and in the request are identical.
The maximum size of a frame is 256 bytes (255 for Sepam).

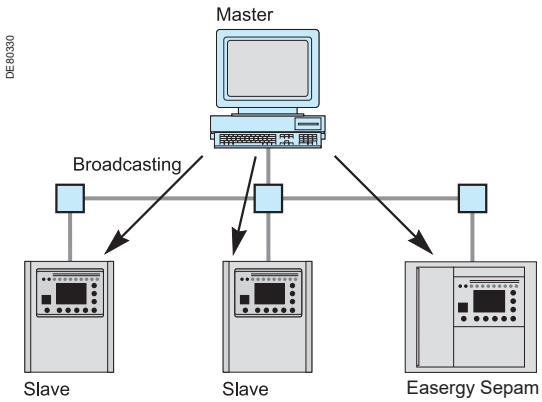

The broadcasting technique.

Synchronization of exchanges

Any character that is received after a silence of more than 3.5 characters is considered as the beginning of a new frame. A minimum silence of 3.5 characters must always be observed between two frames.
A slave disregards all frames:
- received with a physical error for 1 or more characters (format error, parity error, etc.)
- with an incorrect CRC16 result
- for which it is not the recipient.

Broadcasting

The master can also address all slaves using the conventional address 0. This type of exchange is called broadcasting.
Slaves do not respond to broadcast messages. As a result, only messages that do not require the transmission of data by the slaves can be broadcast.

Modbus over TCP/IP

Requests and replies are exchanged as TCP/IP messages over a TCP connection. The slave address is therefore its IP address.

Frames

The application layer part of a Modbus/TCP frame is made up of 2 fields:

MBAP Header	Modbus PDU

- MBAP (Modbus Application) Header (7 bytes): identifies the frame
- Modbus PDU: as previously described.

Modbus Application header

It contains the following fields:

Field	Length	Description	Request	Response
Transaction identifier	2 bytes	Identification of a Modbus request/ response transaction	Initialized by the client	Copied by the server from the received request
Protocol identifier	2 bytes	0 = Modbus protocol	Initialized by the client	Copied by the server from the received request
Length	2 bytes	Number of following bytes (including unit identifier)	Initialized by the client	Initialized by the server
Unit identifier	1 byte	In case of gateways, identifies a remote slave device connected on a serial line. Should be 255 in other cases.	Initialized by the client	Copied by the server from the received request

	byte 1								byte 2							
7	*6*	*5*	*4*	*3*	*2*	*1*	*0*	*7*	*6*	*5*	*4*	*3*	*2*	*1*	*0*
1	1	1	1	1	1	1	1	0	0	0	1	1	1	1	1
1	1	0	0	0	0	0	0				2	1	1	1	1
B	A	9	8	7	6	5	4				0	F	E	D	C

Example: coding of the data field for reading 13 bits, starting at address 104h, with two reply bytes (the vertical numbers indicate the Modbus address of the bit in the corresponding position in the reply).

Modbus protocol data units

Types of functions

The Modbus protocol provides read and write functions as well as network-management and diagnostics functions.

Read N bits functions (1 and 2)

Request

1 or 2	Address of first bit to be read	Number of bits N to be read
1 byte	*2 bytes*	*2 bytes*

Reply

1 or 2	Number of bytes read	Data
1 byte	*1 byte*	*(N + 7)/8 bytes*

Function code

- 1 for internal or output bits
- 2 for input bits.

Data

The first bit sent is the LSB in the first byte and the subsequent bits follow in that order. Any excess bits in the last byte are set to 0.

Read N words functions (3 and 4)

Request

3 or 4	Address of first word to be read	Number of words N to be read
1 byte	*2 bytes*	*2 bytes*

Reply

3 or 4	Number of bytes read	Data
1 byte	*1 byte*	*2N bytes*

Function code

- 3 for internal or output words
- 4 for input words.

Data

Words are sent in the order of increasing addresses.

Write bit function (5)

Request

5	Bit address	Bit value	0: bit set to 0 FFh: bit set to 1	0
1 byte	*2 bytes*	*1 byte*		*1 byte*

Reply

It is identical to the request.

Write word function (6)

Request

6	Word address	Word value
1 byte	*2 bytes*	*2 bytes*

Reply

It is identical to the request.

Write N consecutive bits function (15)

Request

0Fh	Address of 1st bit	Number of bits	Number of bytes	Data
1 byte	*2 bytes*	*2 bytes*	*1 byte*	*(N + 7)/8 bytes*

Data

Bits are coded similar to the Read bits function.

Reply

0Fh	Address of 1st bit written	Number of bits written
1 byte	*2 bytes*	*2 bytes*

Appendix 1. Modbus protocol

Write N consecutive words function (16)

Request

10h	Address of 1st word	Number of words	Number of bytes	Data
1 byte	*2 bytes*	*2 bytes*	*1 byte*	*2N bytes*

Data
Words are sent in the order of increasing addresses.

Reply

10h	Address of 1st word written	Number of words written
1 byte	*2 bytes*	*2 bytes*

High-speed reading of 8 bits function (7)

Request

7
1 byte

Reply

7	Status byte
1 byte	*1 byte*

For Sepam, the status byte is the most-significant byte in the Sepam check-word (address 0C8Fh), i.e. the bits C8F8h to C8FFh.

Diagnosis function (8)

Request

8	Subcode	Data
1 byte	*2 bytes*	*2 bytes*

Reply

8	Subcode	Data
1 byte	*2 bytes*	*2 bytes*

Subcodes for function 8

Sub-code	Use	Request Datum	Reply Datum
0000h	Echo mode	Any	Datum received
000Ah	Reset counters CPT1 to CPT9	0000	0000
000Bh	Read CPT1 (frames without errors)	0000	CPT1
000Ch	Read CPT2 (frames with errors)	0000	CPT2
000Dh	Read CPT3 (exception replies)	0000	CPT3
000Eh	Read CPT4 (frames sent to station)	0000	CPT4
000Fh	Read CPT5 (frames broadcast)	0000	CPT5
0010h	Read CPT6 (not managed by Sepam)	0000	CPT6
0011h	Read CPT7 (not managed by Sepam)	0000	CPT7
0012h	Read CPT8 (frames with physical errors)	0000	CPT8

Read event counter function (11)

For Sepam, the event counter is CPT9 (number of correct requests received and correctly executed).

Request

0Bh
1 byte

Reply

0Bh	0000	Counter CPT9
1 byte	*2 bytes*	*2 bytes*

Exception replies

Each time a slave station receives a frame without errors that it cannot process, it sends an exception reply with the elements below.

Request function code + 80h	Type of exception
1 byte	*1 byte*

Type of exception	Meaning
01	Unknown function code
02	Incorrect address
03	Incorrect datum
04	Device not ready
07	Negative acknowledgment

Calculation of the CRC16

The CRC16 is calculated by the station sending the frame. On reception, the CRC16 is recalculated and compared to the received value. If the two values are not the same, the frame is rejected.
The CRC16 uses two bytes. Contrary to the general Modbus rule, the least-significant byte is sent first. It is the product of the polynomial division of the frame by the generating polynomial $X^{16} + X^{15} + X^2 + 1$.
A number of methods may be used to calculate it. The table method is often used because it is very effective. The program below, written in the C language, is an example of this method.

Example of calculation in the C language

The function uses two parameters:
- `unsigned char *puchMsg`: points to the frame for CRC calculation
- `unsigned short usDataLen`: number of bytes in the frame.

The function returns the CRC as an `unsigned short` type. All possible CRC values are listed in two tables indexed according to the value of the successive bytes in the frame. One table contains the 256 possible values for the most-significant byte in the CRC and the other table contains the 256 possible values for the least-significant byte in the CRC.

Note: *the result is ready to be inserted in the frame, the order of the bytes has already been reversed.*

```
unsigned short CRC16(puchMsg, usDataLen)
unsigned char *puchMsg ;                    /* message to calculate CRC upon */
unsigned short usDataLen ;                  /* quantity of bytes in message */
{
   unsigned char uchCRCHi = 0xFF ;          /* high byte of CRC initialized */
   unsigned char uchCRCLo = 0xFF ;          /* low byte of CRC initialized */
   unsigned uIndex ;                        /* will index into CRC lookup table */
   while (usDataLen--) {                    /* pass through message buffer */
        uIndex = uchCRCHi ^ *puchMsgg++ ;   /* calculate the CRC */
        uchCRCHi = uchCRCLo ^ auchCRCHi[uIndex] ;
        uchCRCLo = auchCRCLo[uIndex] ;
   }
   return (uchCRCHi << 8 | uchCRCLo) ;
}

/* Table of CRC values for high–order byte */
static unsigned char auchCRCHi[] = {
0x00, 0xC1, 0x81, 0x40, 0x01, 0xC0, 0x80, 0x41, 0x01, 0xC0, 0x80, 0x41, 0x00, 0xC1, 0x81, 0x40,
0x01, 0xC0, 0x80, 0x41, 0x00, 0xC1, 0x81, 0x40, 0x00, 0xC1, 0x81, 0x40, 0x01, 0xC0, 0x80, 0x41,
0x01, 0xC0, 0x80, 0x41, 0x00, 0xC1, 0x81, 0x40, 0x00, 0xC1, 0x81, 0x40, 0x01, 0xC0, 0x80, 0x41,
0x00, 0xC1, 0x81, 0x40, 0x01, 0xC0, 0x80, 0x41, 0x01, 0xC0, 0x80, 0x41, 0x00, 0xC1, 0x81, 0x40,
0x01, 0xC0, 0x80, 0x41, 0x00, 0xC1, 0x81, 0x40, 0x00, 0xC1, 0x81, 0x40, 0x01, 0xC0, 0x80, 0x41,
0x00, 0xC1, 0x81, 0x40, 0x01, 0xC0, 0x80, 0x41, 0x01, 0xC0, 0x80, 0x41, 0x00, 0xC1, 0x81, 0x40,
0x00, 0xC1, 0x81, 0x40, 0x01, 0xC0, 0x80, 0x41, 0x01, 0xC0, 0x80, 0x41, 0x00, 0xC1, 0x81, 0x40,
0x01, 0xC0, 0x80, 0x41, 0x00, 0xC1, 0x81, 0x40, 0x00, 0xC1, 0x81, 0x40, 0x01, 0xC0, 0x80, 0x41,
0x01, 0xC0, 0x80, 0x41, 0x00, 0xC1, 0x81, 0x40, 0x00, 0xC1, 0x81, 0x40, 0x01, 0xC0, 0x80, 0x41,
0x00, 0xC1, 0x81, 0x40, 0x01, 0xC0, 0x80, 0x41, 0x01, 0xC0, 0x80, 0x41, 0x00, 0xC1, 0x81, 0x40,
0x00, 0xC1, 0x81, 0x40, 0x01, 0xC0, 0x80, 0x41, 0x01, 0xC0, 0x80, 0x41, 0x00, 0xC1, 0x81, 0x40,
0x01, 0xC0, 0x80, 0x41, 0x00, 0xC1, 0x81, 0x40, 0x00, 0xC1, 0x81, 0x40, 0x01, 0xC0, 0x80, 0x41,
0x00, 0xC1, 0x81, 0x40, 0x01, 0xC0, 0x80, 0x41, 0x01, 0xC0, 0x80, 0x41, 0x00, 0xC1, 0x81, 0x40,
0x01, 0xC0, 0x80, 0x41, 0x00, 0xC1, 0x81, 0x40, 0x00, 0xC1, 0x81, 0x40, 0x01, 0xC0, 0x80, 0x41,
0x01, 0xC0, 0x80, 0x41, 0x00, 0xC1, 0x81, 0x40, 0x00, 0xC1, 0x81, 0x40, 0x01, 0xC0, 0x80, 0x41,
0x00, 0xC1, 0x81, 0x40, 0x01, 0xC0, 0x80, 0x41, 0x01, 0xC0, 0x80, 0x41, 0x00, 0xC1, 0x81, 0x40 } ;

/* Table of CRC values for low–order byte */
static char auchCRCLo[] = {
0x00, 0xC0, 0xC1, 0x01, 0xC3, 0x03, 0x02, 0xC2, 0xC6, 0x06, 0x07, 0xC7, 0x05, 0xC5, 0xC4, 0x04,
0xCC, 0x0C, 0x0D, 0xCD, 0x0F, 0xCF, 0xCE, 0x0E, 0x0A, 0xCA, 0xCB, 0x0B, 0xC9, 0x09, 0x08, 0xC8,
0xD8, 0x18, 0x19, 0xD9, 0x1B, 0xDB, 0xDA, 0x1A, 0x1E, 0xDE, 0xDF, 0x1F, 0xDD, 0x1D, 0x1C, 0xDC,
0x14, 0xD4, 0xD5, 0x15, 0xD7, 0x17, 0x16, 0xD6, 0xD2, 0x12, 0x13, 0xD3, 0x11, 0xD1, 0xD0, 0x10,
0xF0, 0x30, 0x31, 0xF1, 0x33, 0xF3, 0xF2, 0x32, 0x36, 0xF6, 0xF7, 0x37, 0xF5, 0x35, 0x34, 0xF4,
0x3C, 0xFC, 0xFD, 0x3D, 0xFF, 0x3F, 0x3E, 0xFE, 0xFA, 0x3A, 0x3B, 0xFB, 0x39, 0xF9, 0xF8, 0x38,
0x28, 0xE8, 0xE9, 0x29, 0xEB, 0x2B, 0x2A, 0xEA, 0xEE, 0x2E, 0x2F, 0xEF, 0x2D, 0xED, 0xEC, 0x2C,
0xE4, 0x24, 0x25, 0xE5, 0x27, 0xE7, 0xE6, 0x26, 0x22, 0xE2, 0xE3, 0x23, 0xE1, 0x21, 0x20, 0xE0,
0xA0, 0x60, 0x61, 0xA1, 0x63, 0xA3, 0xA2, 0x62, 0x66, 0xA6, 0xA7, 0x67, 0xA5, 0x65, 0x64, 0xA4,
0x6C, 0xAC, 0xAD, 0x6D, 0xAF, 0x6F, 0x6E, 0xAE, 0xAA, 0x6A, 0x6B, 0xAB, 0x69, 0xA9, 0xA8, 0x68,
0x78, 0xB8, 0xB9, 0x79, 0xBB, 0x7B, 0x7A, 0xBA, 0xBE, 0x7E, 0x7F, 0xBF, 0x7D, 0xBD, 0xBC, 0x7C,
0xB4, 0x74, 0x75, 0xB5, 0x77, 0xB7, 0xB6, 0x76, 0x72, 0xB2, 0xB3, 0x73, 0xB1, 0x71, 0x70, 0xB0,
0x50, 0x90, 0x91, 0x51, 0x93, 0x53, 0x52, 0x92, 0x96, 0x56, 0x57, 0x97, 0x55, 0x95, 0x94, 0x54,
0x9C, 0x5C, 0x5D, 0x9D, 0x5F, 0x9F, 0x9E, 0x5E, 0x5A, 0x9A, 0x9B, 0x5B, 0x99, 0x59, 0x58, 0x98,
0x88, 0x48, 0x49, 0x89, 0x4B, 0x8B, 0x8A, 0x4A, 0x4E, 0x8E, 0x8F, 0x4F, 0x8D, 0x4D, 0x4C, 0x8C,
0x44, 0x84, 0x85, 0x45, 0x87, 0x47, 0x46, 0x86, 0x82, 0x42, 0x43, 0x83, 0x41, 0x81, 0x80, 0x40 } ;
```

Setting coding

Data format

All the settings are transmitted in 32-bit signed 2's complement integer format.

Coding of tripping and timer hold curves

The numbers correspond to the setting columns in the lists of settings.

(1) Tripping curves

0 = definite time
1 = inverse
2 = long time inverse
3 = very inverse
4 = extremely inverse
5 = ultra inverse
6 = RI
7 = IEC inverse / A
8 = IEC long time inverse / B
9 = IEC very inverse / B
10 = IEC extremely inverse / C
11 = IEEE moderately inverse
12 = IEEE very inverse
13 = IEEE extremely inverse
14 = IAC inverse
15 = IAC very inverse
16 = IAC extr. inverse
24 = Customized curve
25 = EPATR-B
26 = EPATR-C

(2) Tripping curves

0 = definite time
7 = IEC inverse / A
8 = IEC long time inverse / B
9 = IEC very inverse / B
10 = IEC extremely inverse / C
11 = IEEE moderately inverse
12 = IEEE very inverse
13 = IEEE extremely inverse
17 = Specific Schneider curve
20 = RI²

(3) Timer hold curves

0 = definite time
1 = IDMT

Common protection settings

All protection functions have the following settings at the head of the table.

Setting	Data	Format/Unit
1	Latching	0: no 1: yes
2	Program logic	see below
3	Activity	0: Off 1: On
4	Measurement origin	see below

Details on program-logic field

Bit	*31*	*30*	*....*	*4*	*3*	*2*	*1*	*0*
						DES	AGR	CDC

CDC = 1: the protection function takes part in circuit-breaker/contactor control
= 0: the protection function does not take part

AGR = 1: the protection function takes part in genset shutdown (generator application)
= 0: the protection function does not take part

DES = 1: the protection function takes part in de-excitation (generator application)
= 0: the protection function does not take part

When a common protection setting is not applicable to a particular protection function, it is signaled "reserved" in the table for the function.

Measurement origin

A few special cases of coding for the measurement-origin field, for the ANSI 50N/51 N, ANSI 67N/67NC and ANSI 59N protection functions, are indicated in the table below:

Value	50N/51N	67N/67NC	59N
0	I0Σ	I0Σ	V0
1	I0	I0	Vnt

Protection settings

They are organized according to **increasing ANSI codes**.

ANSI 12 - Overspeed

Function number: 72xx
Unit 1: xx = 01, unit 2: xx = 02

Setting	Data	Format/Unit
1 to 3	Common settings	
4	Reserved	
5	Set point	%
6	Tripping time delay	10 ms

ANSI 14 - Underspeed

Function number: 77xx
Unit 1: xx = 01, unit 2: xx = 02

Setting	Data	Format/Unit
1 to 3	Common settings	
4	Reserved	
5	Set point	%
6	Tripping time delay	10 ms

ANSI 21B - Underimpedance

Function number: 7401

Setting	Data	Format/Unit
1 to 3	Common settings	
4	Reserved	
5	Zs set point	mΩ
6	Tripping time delay	10 ms

ANSI 25 – Synchro-check

Function number: 1801

Setting	Data	Format/Unit
1	Reserved	
2	Reserved	
3	Activity	0: off 1: on
4	dUs set point	% Vnp sync1 or % Unp sync1
5	dFs set point	0.01 Hz
6	dPhis set point	°
7	Us high set point	% Vnp sync1 or % Unp sync1
8	Us low set point	% Vnp sync1 or % Unp sync1
9	Operating modes (no-voltage conditions for which coupling is allowed)	1: Dead1 AND Live2 2: Live1 AND Dead2 3: Dead1 XOR Dead2 4: Dead1 OR Dead2 5: Dead1 AND Dead2
10	Lead time	10 ms
11	Use of voltage check for coupling authorization	0: no 1: yes

ANSI 27 - Undervoltage

Function number: 32xx
Unit 1: xx = 01 to unit 4: xx = 04

Setting	Data	Format/Unit
1 to 4	Common settings	
5	Tripping curve	0: definite 19: IDMT 27: customized
6	Voltage mode	0: phase-to-neutral 1: phase-to-phase
7	Us set point	% Unp
8	Tripping time delay	DT: 0.05 to 300 s IDMT: See note below Customized: range = 1 (TMS = 1)
9	DT of 1st point on the curve	10 ms
10	U/Un of 1st point on the curve	%
11	DT of 2nd point on the curve	10 ms
12	U/Un of 2nd point on the curve	%
13	DT of 3rd point on the curve	N/A
14	U/Un of 3rd point on the curve	N/A
...		
29	DT of 11th point on the curve	N/A
30	U/Un of of 11th point on the curve	N/A

Note setting 8

■ For a setting mode with 10 I/IS: the range varies from 0.05 s to 300 s.
■ For a setting in TMS (Time Multiplier Setting) mode, the range depends on the selected curve and varies as follows:
□ inverse (SIT) and IEC SIT/A: 0.04 to 4.20
□ very inverse (VIT) and IEC VIT/B: 0.07 to 8.33
□ long time inverse (LTI) and IEC LTI/B: 0.01 to 0.93
□ extremely inverse (EIT) and IEC EIT/C: 0.13 to 15.47
□ IEEE moderately inverse: 0.42 to 51.86
□ IEEE very inverse: 0.73 to 90.57
□ IEEE extremely inverse: 1.24 to 154.32
□ IAC inverse: 0.34 to 42.08
□ IAC very inverse: 0.61 to 75.75
□ IAC extremely inverse: 1.08 to 134.4

Notes settings 9 to 30

The customized curve is unique and only concerns unit 1. However, to retain consistency with the Sepam software architecture, the same frame format is used for all units. Unused points are set to (-1, -1). This is the case for the points for unit 2 and above. It is also the case for additional points for unit 1. For example, if the curve is defined by 6 points, the last 5 are set to (-1, -1). There is no "Number of points" setting in the frame.
For each useful point, the value of T must be greater than or equal to that of the previous point. The first point must be 0 (rising or falling operations are allowed). The value of U/Un for the last useful point must be greater than all the other values of U/Un.

ANSI 27D - Positive sequence undervoltage

Function number: 38xx
Unit 1: xx = 01, unit 2: xx = 02

Setting	Data	Format/Unit
1 to 4	Common settings	
5	Vds set point	% Unp
6	Tripping time delay	10 ms

ANSI 27R - Remanent undervoltage

Function number: 35xx
Unit 1: xx = 01, unit 2: xx = 02

Setting	Data	Format/Unit
1 to 4	Common settings	
5	Us set point	% Unp
6	Tripping time delay	10 ms

ANSI 32P - Directional active overpower

Function number: 53xx
Unit 1: xx = 01, unit 2: xx = 02

Setting	Data	Format/Unit
1 to 3	Common settings	
4	Reserved	
5	Access	0: reverse power 1: overpower
6	Ps set point	100 W
7	Tripping time delay	10 ms

ANSI 32Q - Directional reactive overpower

Function number: 5401

Setting	Data	Format/Unit
1 to 3	Common settings	
4	Reserved	
5	Access	0: reverse power 1: overpower
6	Qs set point	100 var
7	Tripping time delay	10 ms

ANSI 37 - Phase undercurrent

Function number: 2201

Setting	Data	Format/Unit
1 to 3	Common settings	
4	Reserved	
5	Is set point	% Ib
6	Tripping time delay	10 ms

ANSI 37P - Directional active underpower

Function number: 55xx
Unit 1: xx = 01, unit 2: xx = 02

Setting	Data	Format/Unit
1 to 3	Common settings	
4	Reserved	
5	Access	0: drawn 1: supplied
6	Ps set point	100 W
7	Tripping time delay	10 ms

ANSI 38/49T - Temperature monitoring

Function number: 46xx
Unit 1: xx = 01 to unit 16: xx = 10h

Setting	Data	Format/Unit
1 to 3	Common settings	
4	Reserved	
5	Ts1 alarm set point	°C
6	Ts2 alarm set point	°C

ANSI 40 - Field loss (underimpedance)

Function number: 7001

Setting	Data	Format/Unit
1 to 3	Common settings	
4	Reserved	
5	Xa resistance	1 mΩ
6	Xb resistance	1 mΩ
7	Xc resistance	1 mΩ
8	Tripping time delay circle 1	10 ms
9	Tripping time delay circle Xd	10 ms

ANSI 46 - Negative sequence / unbalance

Function number: 45xx
Unit 1: xx = 01, unit 2: xx = 02

Setting	Data	Format/Unit
1 to 4	Common settings	
5	Tripping curve	②
6	Is set point	% Ib
7	Tripping time delay	10 ms
8	K setting	1 to 100

ANSI 47 - Negative sequence overvoltage

Function number: 40xx
Unit 1: xx = 01, unit 2: xx = 02

Setting	Data	Format/Unit
1 to 4	Common settings	
5	Vis set point	% Unp
6	Tripping time delay	10 ms

ANSI 48/51LR - Locked rotor / excessive starting time

Function number: 4401

Setting	Data	Format/Unit
1 to 3	Common settings	
4	Reserved	
5	Is set point	% Ib
6	ST excessive starting time	10 ms
7	LT locked rotor time	10 ms
8	LTS locked on start time	10 ms

ANSI 49RMS - Thermal overload

Function number: 4301

Thermal overload

Setting	Data	Format/Unit
1 to 4	Common settings	
5	Negative sequence factor (K)	0: none (0) 1: low (2.25) 2: medium (4.5) 3: high (9)
6	Is set point (shift group 1/group 2)	% Ib
7	Ambient temperature taken into account	0: no 1: yes
8	Maximum equipment temperature	°C
9	Additional settings taken into account (group 2)	0: no 1: yes
10	Learnt cooling time constant (T2 learnt) taken into account	0: no 1: yes
11	Group 1 - thermal alarm set point	%
12	Group 1 - thermal tripping set point	%
13	Group 1 - heating time constant	
14	Group 1 - cooling time constant	min.
15	Group 1 - initial heat rise	%
16	Group 2 - thermal alarm set point	%
17	Group 2 - thermal tripping set point	%
18	Group 2 - heating time constant	min.
19	Group 2 - cooling time constant	min.
20	Group 2 - initial heat rise	%
21	Group 2 - base current for group 2	0.1 A
22	49RMS cable - admissible current	0.1 A
	49RMS capacitor - tripping current	0.1 A
23	Associated time constant	min.
24	Current setting	0.1 A
25	Alarm current	0.1 A
26	Type of thermal model	0: generic
27	Startup Inhibit time preventive computation	0XFF = yes 0X00 = no
28	Startup heating user input	0XFF = yes 0X00 = no
29	Startup heating value (Estart)	%

Note: ■ *thermal overload for motors : parameters 1 to 21 and 27 to 29*
■ *thermal overload for other machines: parameters 1 to 21*
■ *thermal overload for cables: parameters 1 to 4 and 22 to 23*
■ *thermal overload for capacitors: parameters 1 to 4 and 22 to 25*

ANSI 49RMS - Thermal overload (cont.)

Function number: 4301

Motor thermal overload

Setting	Data	Format/Unit
1	Latching	0: no, 1: yes
2	Circuit breaker control	0: no, 1: yes
3	Activity	0: off 1: on
4	Ialarm = current alarm set point	%
5	Itrip = current tripping set point	%
6	Tlong = motor heating time constant	min.
7	Tshort = stator heating time constant	min.
8	Tcool = cooling time constant	min.
9	Alpha = rotor/stator exchange coefficient	%
10	IL = locked rotor current	%
11	LRT = locked rotor torque	%
12	Idem = starting current set point	%
13	Ambient T taken into account by sensor 8	0: no, 1: yes
14	Tmax = max. stator temperature constant	°C
15	Tc = locked rotor cold limit time	seconds
16	Th = locked rotor hot limit time	seconds
17	Sh = Heat rise set point for hot state bit	%
18 ... 25	Reserved	
26	Type of thermal model (1)	1: Motor
27 ... 29	Reserved	

(1) This setting is always at 1 for the motor thermal overload model.

Transformer thermal overload

Setting	Data	Format/Unit
1	Latching	0: no, 1: yes
2	Circuit breaker control	0: no, 1: yes
3	Activity	0: off 1: on
4	Measurement origin	0: primary 1: secondary
5	Type of transformer	0: AN dry-type 1: AF dry-type 2: distribution ONAN immersed 3: High and medium power ONAN immersed 4: ONAF 5: OF 6: OD
6	Insulation class (1)	■ Dry-type transformer: 105, 120, 130, 135, 180, 200 or 220° ■ Immersed transformer: 0 (not significant) Unit = °
7	Alarm temperature (group 1) (2)	■ Dry-type transformer: Class 105: 95 to 130° Class 120: 110 to 145° Class 130: 120 to 155° Class 180: 170 to 205° Class 200: 190 to 225° Class 220: 210 to 245° ■ Immersed transformer: 98 to 160 ° Unit = °
8	Tripping temperature (group 1)	Same as alarm temperature
9	Alarm temperature (group 2) (2)	Same as group 1
10	Tripping temperature (group 2)	Same as group 1
11	Transformer time constant	1 to 600 Unit = minutes
12	Oil time constant (3)	5 to 600 Unit = minutes
13	Ambient T taken into account by sensor 8	0: no, 1: yes
14	Oil T taken into account by sensor 8 (3)	0: no, 1: yes
15	Additional settings taken into account (group 2) (3)	0: no, 1: yes
16	Restricted oil flow	0: no, 1: yes
17 ... 25	Reserved	
26	Type of thermal model (4)	2: Transformer
27 ... 29	Reserved	

(1) This setting only applies to dry-type transformers. Value 0 accepted for an immersed transformer.
(2) Alarm temperature must be less than the tripping temperature.
(3) This parameter only applies to immersed transformers. Value 0 accepted for a dry-type transformer.
(4) This setting is always at 2 for the transformer thermal overload model.

ANSI 50BF - Breaker failure

Function number: 9801

Setting	Data	Format/Unit
1	Common settings	
2	Reserved	
3	Common settings	
4	Reserved	
5	Use of breaker closed input	0: no 1: yes
6	Is set point	0.1 A
7	Time	10 ms

ANSI 50/51 - Phase overcurrent

Function number: 01xx

Unit 1: xx = 01 to unit 4: xx = 04

Setting	Data	Format/Unit
1 to 4	Common settings	
5	Confirmation	0 = none 1 = neg. seq. overvoltage 2 = undervoltage
6	Group A - tripping curve	①
7	Group A - Is set point	0.1 A
8	Group A - tripping time delay	10 ms
9	Group A - timer hold curve	③
10	Group A - timer hold	10 ms
11	Group B - tripping curve	①
12	Group B - Is set point	0.1 A
13	Group B - tripping time delay	10 ms
14	Group B - timer hold curve	③
15	Group B - timer hold	10 ms
16	Group A - harmonic 2 restraint	0: active, 1: inactive
17	Group A - Isc min	0.1 A
18	Group B - harmonic 2 restraint	0: active, 1: inactive
19	Group B - Isc min	0.1 A
20	H2 restraint set point (1)	%

(1) Parameter common to all groups and all units.

ANSI 50N/51N - Earth fault

Function number: 06xx

Unit 1: xx = 01 to unit 4: xx = 04

Setting	Data	Format/Unit
1 to 4	Common settings	
5	Group A - tripping curve	①
6	Group A - Is0 set point	0.1 A
7	Group A - tripping time delay	10 ms
8	Group A - timer hold curve	③
9	Group A - timer hold	10 ms
10	Group A - H2 restraint	0: yes 1: no
11	Group B - tripping curve	①
12	Group B - Is0 set point	0.1 A
13	Group B - tripping time delay	10 ms
14	Group B - timer hold curve	③
15	Group B - timer hold	10 ms
16	Group B - H2 restraint	0: yes 1: no

ANSI 50V/51V - Voltage-restrained phase overcurrent

Function number: 1901

Setting	Data	Format/Unit
1 to 4	Common settings	
5	Tripping curve	①
6	Is set point	0.1 A
7	Tripping time delay	10 ms
8	Timer hold curve	③
9	Timer hold	10 ms

ANSI 59 - Overvoltage

Function number: 28xx
Unit 1: xx = 01, unit 2: xx = 02

Setting	Data	Format/Unit
1 to 4	Common settings	
5	Voltage mode	0: phase-to-neutral 1: phase-to-phase
6	Us set point	% Unp
7	Tripping time delay	10 ms

ANSI 59N - Neutral voltage displacement

Function number: 39xx
Unit 1: xx = 01, unit 2: xx = 02

Setting	Data	Format/Unit
1 to 4	Common settings	
5	Tripping curve	0: definite 18: IDMT
6	Vs0 set point	% Unp
7	Tripping time delay	10 ms

ANSI 64 REF - Restricted earth fault differential

Function number: 64xx
Unit 1: xx = 01, unit 2: xx = 02

Setting	Data	Format/Unit
1 to 4	Common settings	
5	Is0 set point	0.1 A

ANSI 66 - Starts per hour

Function number: 4201

Setting	Data	Format/Unit
1	Common settings	
2	Reserved	
3	Common settings	
4	Reserved	
5	Period of time	Hours
6	Total number of starts	1
7	Number of consecutive hot starts	1
8	Number of consecutive cold starts	1
9	Delay between stop/start	min.
10	Delay between consecutive starts	min.

ANSI 67 - Directional phase overcurrent

Function number: 52xx
Unit 1: xx = 01, unit 2: xx = 02

Setting	Data	Format/Unit		
1 to 3	Common settings			
4	Reserved			
5	Group A - direction	0: line	1: busbar	
6	Group A - characteristic angle	3: 30°	4: 45°	5: 60°
7	Group A - tripping logic	0: 1/3	1: 2/3	
8	Group A - tripping curve	①		
9	Group A - Is set point	0.1 A		
10	Group A - tripping time delay	10 ms		
11	Group A - timer hold curve	③		
12	Group A - timer hold	10 ms		
13	Group B - direction	0: line	1: busbar	
14	Group B - characteristic angle	3: 30°	4: 45°	5: 60°
15	Group B - tripping logic	0: 1/3	1: 2/3	
16	Group B - tripping curve	①		
17	Group B - Is set point	0.1 A		
18	Group B - tripping time delay	10 ms		
19	Group B - timer hold curve	③		
20	Group B - timer hold	10 ms		

ANSI 67N/67NC - Directional earth fault

Function number: 50xx
Unit 1: xx = 01, unit 2: xx = 02

Setting	Data	Format/Unit
1 to 4	Common settings	
5	Access	0: projection (type 1) 1: directional (type 2) 2: directional with adjustable sector (type 3)
6	Group A - direction	0: line 1: busbar
7	Group A - types 1 and 2: characteristic angle	0: -45° 1: 0° 2: 15° 3: 30° 4: 45° 5: 60° 6: 90°
	Group A - type 3: limiting angle 1	0° to 359°
8	Group A - type 1: sector	2: sector 76° 3: sector 83° 4: sector 86°
	Group A - type 3: limiting angle 2	0° to 359°
9	Group A - tripping curve	①
10	Group A – Is0 set point	0.1 A
11	Group A - tripping time delay	10 ms
12	Group A - types 1 and 2: Vs0 set point	% Unp
	Group A - type 3: Vs0 set point	0.1% Unp
13	Group A - timer hold curve	③
14	Group A - timer hold	10 ms
15	Group A - memory time	10 ms
16	Group A - memory voltage	% Unp
17	Group B - direction	0: line 1: busbar
18	Group B - types 1 and 2: characteristic angle	Same as group A
	Group B - type 3: limiting angle 1	0° to 359°
19	Group B - type 1: sector	Same as group A
	Group B - type 3: limiting angle 2	0° to 359°
20	Group B - tripping curve	①
21	Group B - Is0 set point	0.1 A
22	Group B - tripping time delay	10 ms
23	Group B - types 1 and 2: Vs0 set point	% Unp
	Group B - type 3: Vs0 set point	0.1% Unp
24	Group B - timer hold curve	③
25	Group B - timer hold	10 ms
26	Group B - memory time	10 ms
27	Group B - memory voltage	% Unp

ANSI 81H - Overfrequency

Function number: 57xx
Unit 1: xx = 01, unit 2: xx = 02

Setting	Data	Format/Unit
1 to 4	Common settings	
5	Fs set point (1)	0.1 Hz
6	Tripping time delay	10 ms
7	Reserved	
8	Vs set point	% Unp
9	Fs set point	0.01 Hz

(1) Setting 5 is reserved for future compatibility with firmware versions higher than version 8xx.

ANSI 81L - Underfrequency

Function number: 56xx
Unit 1: xx = 01 to unit 4: xx = 04

Setting	Data	Format/Unit
1 to 4	Common settings	
5	Fs set point(1)	0.1 Hz
6	Tripping time delay	10 ms
7	Restraint	0: no 1: yes
8	Vs set point	% Unp
9	Inhibition set point for frequency variation	Hz/s
10	Fs set point	0.01 Hz

(1) Setting 5 is reserved for future compatibility with firmware versions higher than version 8xx.

ANSI 81R – Rate of change of frequency

Function number: 58xx
Unit: 1 xx = 01, unit 2: xx = 02

Setting	Data	Format/Unit
1	Latching	0: no 1: yes
2	Switchgear control	0: no 1: yes
3	Activity	0: off 1: on
4	Reserved	
5	dfs/dt set point	0.01 Hz/s
6	Tripping time delay	10 ms

Other function settings

ANSI 60 - CT supervision

Function number: 2601

Setting	Data	Format/Unit
1	Reserved	
2	Reserved	
3	Common settings	
4	Reserved	
5	Action on 21G, 46, 40, 51N, 32P, 37P, 32Q, and 64REF protections	0: none 1: inhibition
6	Tripping time delay	10 ms

ANSI 60FL - VT supervision

Function number: 2701

Setting	Data	Format/Unit
1	Reserved	
2	Reserved	
3	Common settings	
4	Reserved	
5	Use breaker-position or voltage-presence criterion	0: circuit breaker 1: voltage
6	Check loss of 3 V/2 U	0: no 1: yes
7	Test current	0: no 1: yes
8	Use Vi, Ii criterion	0: no 1: yes
9	Action on 21G, 27, 27D, 32P, 32Q, 37P, 40, 47, 51V, 59, 59N protections	0: none 1: inhibition
10	Action on 67 protection	0: non directional 1: inhibition
11	Action on 67N protection	0: non directional 1: inhibition
12	Vi tripping set point	%
13	Ii tripping set point	%
14	3 V/ 2 U loss time	10 ms
15	Vi, Ii criterion time	10 ms

ANSI 79 - Recloser

Function number: 1701

Setting	Data	Format/Unit
1	Reserved	
2	Reserved	
3	Common settings	
4	Reserved	
5	Number of cycles	1 to 4
6	Reclaim time	10 ms
7	Safety time until ready	10 ms
8	Maximum additional dead time	0: no 1: yes
9	Maximum wait time	10 ms
10	Cycle 1 activation mode	see below
11	Cycle 2, 3, 4 activation mode	see below
12	Cycle 1 dead time	10 ms
13	Cycle 2 dead time	10 ms
14	Cycle 3 dead time	10 ms
15	Cycle 4 dead time	10 ms

Cycle activation mode

The activation mode of each cycle is coded as follows:

Bit	Activation by (if bit set to 1) / Non activation by (if bit set to 0)
0	Instantaneous protection 50/51 unit 1
1	Delayed protection 50/51 unit 1
2	Instantaneous protection 50/51 unit 2
3	Delayed protection 50/51 unit 2
4	Instantaneous protection 50/51 unit 3
5	Delayed protection 50/51 unit 3
6	Instantaneous protection 50/51 unit 4
7	Delayed protection 50/51 unit 4
8	Instantaneous protection 50N/51N unit 1
9	Delayed protection 50N/51N unit 1
10	Instantaneous protection 50N/51N unit 2
11	Delayed protection 50N/51N unit 2
12	Instantaneous protection 50N/51N unit 3
13	Delayed protection 50N/51N unit 3
14	Instantaneous protection 50N/51N unit 4
15	Delayed protection 50N/51N unit 4
16	Instantaneous protection 67N unit 1
17	Delayed protection 67N unit 1
18	Instantaneous protection 67N unit 2
19	Delayed protection 67N unit 2
20	Instantaneous protection 67 unit 1
21	Delayed protection 67 unit 1
22	Instantaneous protection 67 unit 2
23	Delayed protection 67 unit 2
24	Instantaneous V_DECL logic equation

General parameters

These settings are read access stebonly.
Function number: D002

Setting	Data	Format/Unit	
1	Working language	1: English	2: other
2	Rated frequency	50, 60 (Hz)	2: group B
3	Active group of settings	1: group A	
		3: selection by logic input	
		4: selection by remote control	
4	Demand-value integration period	5, 10, 15, 30, 60 minutes	
5	Type of cubicle	1: incomer	2: feeder
6	Active-energy increment	100 to 5000000 (W)	
7	Reactive-energy increment	100 to 5000000 (var)	
8	Phase-rotation direction	1: direction 123	2: direction 132
9	Temperature unit	1: °C	2: °F
10	Remote-setting authorization	1: no	2: yes
11	Time synchronization mode	1: COM1 port	3: input I103
		5: none	6: Ethernet port
12	Remote-control mode	1: SBO mode	2: direct mode
13	Reserved		
14	Reserved		
15	Rated auxiliary voltage	24 to 250 (V DC)	
16	Aux. voltage alarm low set point	% rated Vaux, min. 20 V	
17	Aux. voltage alarm high set point	% rated Vaux, max. 275 V	
18	Logic inputs ignored on loss of Vaux	1: inactive	2: active
19	Base current Ib	0.2 to 1.3 In (A)	
20	Rated current In	1 to 15 kA	
21	Number of phase CTs	1: 2 CTs	2: 3 CTs
22	Phase CT rating	1: 1 A 2: 5 A	3: LPCT
23	Rated residual current In0	10 to 150000 (0.1 A)	
24	Residual current measurement mode	1: CSH 2 A	3: CSH 20 A
		4: 1 A CT	6: 5 A CT
		8: ACE990 range 1	
		9: ACE990 range 2	
		11: not measured	
25	Reserved		
26	Rated primary voltage Unp	0 A<In˜6.25 kA: 220 V Unp ˜ 250 kV	
		6.25 kA<In˜15 kA: 220 V Unp ˜ 20 kV	
27	Rated secondary voltage Uns	90 to 230 (V)	
28	VT wiring	1: 3 V, 2: 2 U, 3: 1 U, 4: 1 V	
29	Residual voltage mode	1: none	2: Σ 3V
		3: VT Uns/$\sqrt{3}$	4: VT Uns/3
30	Neutral-point residual voltage measurement	1: none	2: present
31	Neutral-point rated voltage Unp	220 to 250000 (V)	
32	Neutral-point rated voltage Uns	57 V to 133 V	
33-48	Reserved		

Application-specific parameters

These settings are read access stebonly.

Setting	Data	Format/Unit
1	Transformer presence	1: no
		2: yes
2	Voltage winding 1 Un1	220 to 250000 V
3	Voltage winding 2 Un2	220 to 440000 V
4	Power S	100 to 999000 kVA
5	Vector shift	0 to 11
6	Rated motor speed	100 to 3000 rpm (1)
		100 to 3600 rpm (2)
7	Number of pulses per rotation	1 to 1800
8	Zero speed threshold	5 to 20%
15	Rated power	kW
16	Synchronous reactance of d axis	0,1 %
17	Transient reactance of d axis	0,1 %
18	Synchronous reactance of q axis	0,1 %
19	Moment of inertia for turbine + generator or motor + load	Kg.m ^{2}

(1) For a frequency of 50 Hz.
(2) For a frequency of 60 Hz.

Contents

Safety and Cyber-security instructions **338**

Precautions **339**

Equipment identification **340**

List of Sepam series 60 references **342**

Base unit **344**
Dimensions 344
Mounting 345
Connection 346
Connection of Sepam C60 348
Connection of phase current inputs 349
Connection of residual current inputs 350
Connection of low voltage residual current inputs 352
Connection of low voltage current inputs for restricted earth protection (ANSI 64REF) 354
Connection of low voltage phase voltage inputs 356
Functions available according to connected voltage inputs 357

1 A/5 A current transformers **358**

LPCT type current sensors **361**

CSH120, CSH200 and CSH300 Core balance CTs **364**

CSH30 interposing ring CT **366**

ACE990 Core balance CT interface **368**

Voltage transformers **370**

MES120, MES120G, MES120H 14 input / 6 output modules **371**
Presentation 371
Installation 372

Optional remote modules **374**
Selection guide 374

MET148-2 Temperature sensor module **376**

MSA141 Analog output module **378**

DSM303 Remote advanced UMI module **380**

MCS025 Synchro-check module **382**

Communication accessory selection guide **386**

Connection of communication interfaces **387**
Connection cords 387
Characteristics of communication networks 388

ACE949-2 2-wire RS 485 network interface **389**

ACE959 4-wire RS 485 network interface **390**

ACE937 fiber optic interface **391**

ACE969TP-2 and ACE969FO-2 Multi-protocol interfaces **392**
Description 394
Connection 395

ACE850TP and ACE850FO Multi-protocol interfaces **398**
Description 400
Connection 401

ACE909-2 RS 232/RS 485 converter **404**

ACE919CA and ACE919CC RS 485/RS 485 converters **406**

ECI850 IEC 61850 Sepam server **408**

Safety and Cyber-security instructions
Before starting

This page contains important safety and cyber-security instructions that must be followed precisely before attempting to install, repair, service or maintain electrical equipment. Carefully read and follow the safety and cyber-security instructions described below.

Safety instructions

⚠ ⚠ DANGER

HAZARD OF ELECTRIC SHOCK, ELECTRIC ARC, BURNS OR EXPLOSION

- Only qualified personnel should install this equipment. Such work should be performed only after reading this entire set of instructions.
- NEVER work alone.
- Turn off all power supplying this equipment before working on or inside it.
- Always use a properly rated voltage sensing device to confirm that all power is off.
- Before performing visual inspections, tests, or maintenance on this equipment, disconnect all sources of electric power. Assume that all circuits are live until they have been completely de-energized, tested and tagged. Pay particular attention to the design of the power system. Consider all sources of power, including the possibility of backfeeding.
- Beware of potential hazards, wear personal protective equipment, carefully inspect the work area for tools and objects that may have been left inside the equipment.
- The successful operation of this equipment depends upon proper handling, installation, and operation. Neglecting fundamental installation requirements can lead to personal injury as well as damage to electrical equipment or other property.
- Handling this product requires relevant expertise in the field of protection of electrical networks. Only competent people who have this expertise are allowed to configure and set up this product.
- Before performing Dielectric (Hi-Pot) or Megger testing on any equipment in which the relay is installed, disconnect all input and output wires to the relay. High voltage testing can damage electronic components contained in the Sepam unit.

Failure to follow these instructions will result in death or serious injury.

Cyber security instructions

SEPAM is designed to be operated only on a protected network.
(see document "Recommended Cybersecurity Best Practices"
--> https://www.se.com/us/en/download/document/7EN52-0390/)

NOTICE

HAZARD OF DATA TAMPERING OR UNINTENDED OPERATION

- Secure the local network : physically or logically segment the network and restrict access using standard controls such as firewall.
- Enable IP Filtering for Modbus/TCP and IEC61850 (see document "SEPAM IEC61850 communication" SEPED306024 chapter configuration of ACE850 communication interface).
- Inhibit the remote-setting. It is possible to inhibit the remote-setting function using a configuration parameter accessible via SFT2841. In the default set-up (factory settings), the remote-setting function is inhibited.

FAILURE TO FOLLOW THESE INSTRUCTIONS CAN RESULT IN COMPROMISED SECURITY. SCHNEIDER-ELECTRIC MAKES NO WARRANTY THAT THE SEPAM PRODUCTS WILL BE FREE FROM VULNERABILITIES, CORRUPTION, ATTACK, VIRUSES, INTERFERENCE, HACKING OR OTHER SECURITY INTRUSIONS OR CYBER THREATS, AND SCHNEIDER-ELECTRIC DISCLAIMS ANY LIABILITY IN RELATION THERETO.

Precautions

We recommend that you follow the instructions given in this document for quick, correct installation of your Sepam unit:
- *Equipment identification*
- *Assembly*
- *Connection of inputs, current, voltage and sensors*
- *Connection of power supply*
- *Checking prior to commissioning*

Transport, handling and storage

Sepam in its original packaging

Transport:
Sepam can be shipped to any destination by all usual means of transport without taking any additional precautions.

Handling:
Sepam can be handled without any particular care and can even withstand being dropped by a person standing at floor-level.

Storage:
Sepam can be stored in its original packaging, in an appropriate location for several years:
- Temperature between -25°C and +70°C (between -13°F and +158°F)
- Humidity ⩽ 90%.

Periodic, yearly checking of the environment and the packaging condition is recommended.
Energize the Sepam for 1 hour:
- every 5 years for a storage temperature < 30 ° C (86 ° F)
- every 3 years for a storage temperature ⩾ 30 ° C (86 ° F)
- every 2 years for a storage temperature ⩾ 50 ° C (122 ° F)

Once Sepam has been unpacked, it should be energized as soon as possible.
If the storage time has been longer than 2 years, it is advisable to activate each of the output relays 5 times during commissioning (see procedure in chapter “Commissioning - Checking the connection of the logic outputs”, page 467)

Sepam installed in a cubicle

Transport:
Sepam can be transported by all usual means of transport in the customary conditions used for cubicles. Storage conditions should be taken into consideration for a long period of transport.

Handling:
Should the Sepam fall out of a cubicle, check its condition by visual inspection and energizing.

Storage:
Keep the cubicle protection packing for as long as possible. Sepam, like all electronic units, should not be stored in a damp environment for more than a month. Sepam should be energized as quickly as possible. If this is not possible, the cubicle reheating system should be activated.

Environment of the installed Sepam

Operation in a damp environment
The temperature/relative humidity factors must be compatible with the unit’s environmental withstand characteristics.
If the use conditions are outside the normal zone, special arrangements should be made before commissioning, such as air conditioning of the premises.

Operation in a polluted atmosphere
A contaminated industrial atmosphere (such as the presence of chlorine, hydrofluoric acid, sulfur, solvents, etc.) can cause corrosion of the electronic components, in which case environmental control arrangements should be made (such as pressurized premises with filtered air, etc.) before commissioning.
The effect of corrosion on Sepam has been tested according to the IEC 60068-2-60 and EIA 364-65A (See "Environmental Characteristic", page 17).

Equipment identification

Identification of the base unit

Each Sepam is delivered in a separate package containing:
- 1 Easergy Sepam series 60 base unit, with its memory cartridge and the connector Ⓐ tightened
- 8 spring clips
- 1 terminal block identification label
- 2 keys (mimic-based UMI only)
- 1 Quick Start and a certificate of compliance

The other optional accessories such as modules, current input connectors and cords are delivered in separate packages.
To identify a Sepam, inspect the 3 labels which are visible when the door on the front panel is opened:
- label with base unit hardware reference, stuck on the back of the door on the front panel:

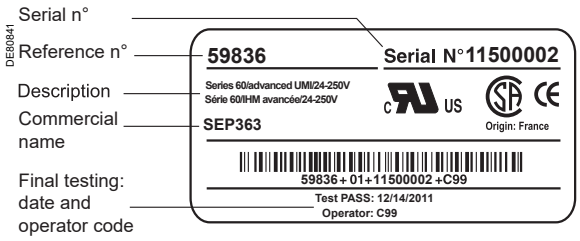

- 2 labels stuck on the cartridge:

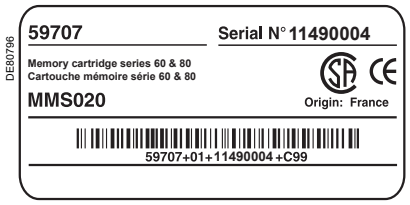

Cartridge hardware reference.



Reference of software loaded in the cartridge:
- application
- working language.

Equipment identification

Identification of accessories

The accessories such as optional modules, current or voltage connectors and connection cords come in separate packages, identified by labels.

■ Example of MSA141 module identification label:

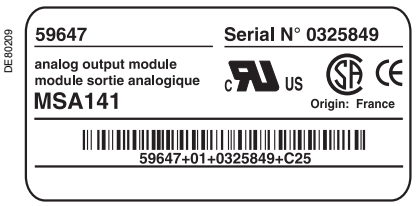

List of Easergy Sepam series 60 references

Reference	Description
59608	DSM303, remote advanced UMI module
59629	CCA634 connector for 1 A/5 A CT + I0 current sensors
59630	CCA630 connector for 1 A/5 A CT current sensors
59634	CSH30 interposing ring CT for I0 input
59635	CSH120 residual current sensor, diameter 120 mm (4.75 in)
59636	CSH200 residual current sensor, diameter 196 mm (7.72 in)
59637	CSH300 residual current sensor, diameter 291 mm (11.46 in)
59638	ECI850 IEC 61850 Sepam server with PRI voltage surge arrester
59639	AMT852 lead sealing accessory
59641	MET148-2 8-temperature sensor module
59642	ACE949-2 2-wire RS 485 network interface
59643	ACE959 4-wire RS 485 network interface
59644	ACE937 fiber-optic interface
59647	MSA141 1 analog output module
59648	ACE909-2 RS 485/RS 232 converter
59649	ACE919 AC RS 485/RS 485 interface (AC power supply)
59650	ACE919 DC RS 485/RS 485 interface (DC power supply)
59658	ACE850TP RJ45 Ethernet multi-protocol interface (IEC 61850, Modbus TCP/IP)
59659	ACE850FO fiber-optic Ethernet multi-protocol interface (IEC 61850, Modbus TCP/IP)
59660	CCA770 remote module connection cord, L = 0.6 m (2 ft)
59661	CCA772 remote module connection cord, L = 2 m (6.6 ft)
59662	CCA774 remote module connection cord, L = 4 m (13.1 ft)
59663	CCA612 communication interface connection cord (except ACE850), L = 3 m (9.8 ft)
59664	CCA783 PC RS 232 port connection cord
59665	CCA785 MCS025 module connection cord
59666	CCA613 LPCT test plug
59667	ACE917 LPCT injection adapter
59668	CCA620 20-pin screw type connector
59669	CCA622 20-pin ring lug connector
59670	AMT840 MCS025 mounting plate
59671	CCA784 PC USB port connection cord
59672	ACE990 core balance CT interface for I0 input
59676	Kit 2640 2 sets of spare connectors for MES114
59679	SFT2841 CD-ROM with SFT2841 without CCA783 or CCA784 cord
59699	ATM820 blanking plate

List of Easergy Sepam series 60 references

Reference	Designation
59702	CCA671 connector for LPCT current sensors
59706	AMT880 Easergy Sepam series 60 and series 80 mounting plate
59707	MMS020 memory cartridge
59712	MCS025 synchro-check module
59715	MES120 14 input + 6 output module / 24-250 V DC
59716	MES120G 14 input + 6 output module / 220-250 V DC
59722	MES120H 14 input + 6 output module / 110-125 V DC
59723	ACE969TP-2(1) 2-wire RS 485 multi-protocol interface (Modbus, DNP3 or IEC 60870-5-103)
59724	ACE969FO-2(1) fiber-optic multi-protocol interface (Modbus, DNP3 or IEC 60870-5-103)
59726	CD SFT850 CD-ROM with IEC 61850 configuration software
59751	CCA614 ACE850 communication interface connection cord, L = 3 m (9.8 ft)
59754	TCP/IP firmware option (mandatory for using ACE850 multi-protocol communication interfaces with Sepam series 40, Easergy Sepam series 60 and Easergy Sepam series 80).
59787	Substation application type S60
59789	Substation application type S62
59790	Transformer application type T60
59791	Transformer application type T62
59792	Motor application type M61
59793	Generator application type G60
59794	Generator application type G62
59795	Capacitor application type C60
59835	SEP060, base unit without UMI, 24-250 V DC power supply
59836	SEP363, base unit with advanced UMI, 24-250 V DC power supply
59837	SEP666 base unit with mimic-based UMI, 24-250 V DC power supply
59846	Operation language English/French
59847	Operation language English/Spanish
TCSEAK0100	Ethernet configuration kit for ECI850

***(1)** Reference 59720 ACE969TP cancelled and replaced by 59723, reference 59721 ACE969FO cancelled and replaced by 59724.*

Base unit
Dimensions

Dimensions

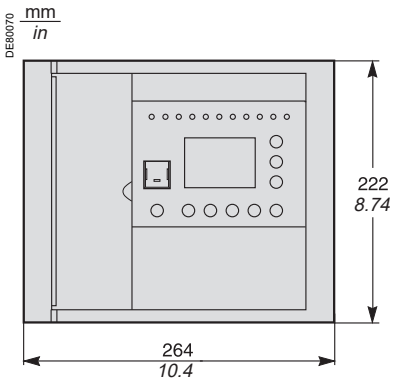

Front view of Sepam.

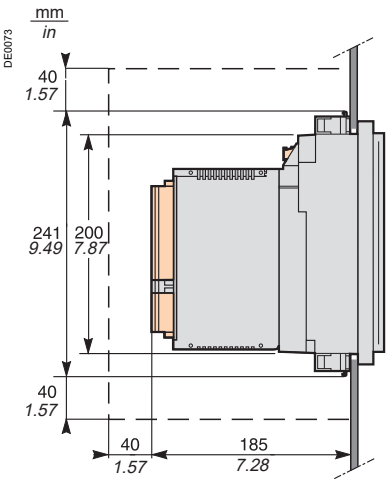

Side view of Sepam with MES120, flush-mounted in front panel with spring clips.
Front panel: 1.5 mm (0.05 in) to 6 mm (0.23 in) thick.

Clearance for Sepam assembly and wiring.

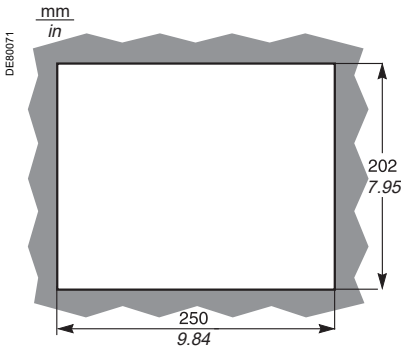

Cut out.

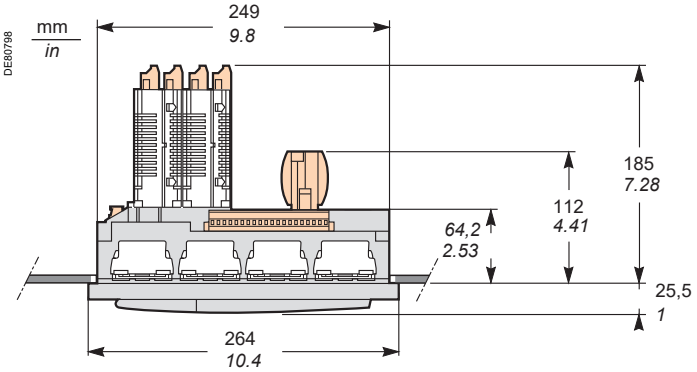

Top view of Sepam with MES120, flush-mounted in front panel with spring clips.
Front panel: 1.5 mm (0.05 in) to 6 mm (0.23 in) thick.

⚠ CAUTION

HAZARD OF CUTS

Trim the edges of the cut-out plates to remove any jagged edges.

Failure to follow these instructions can result in injury.

Assembly with AMT880 mounting plate

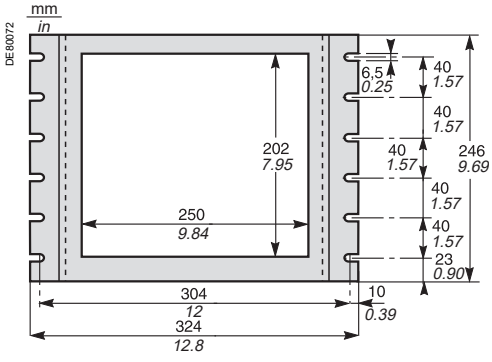

AMT880 mounting plate.

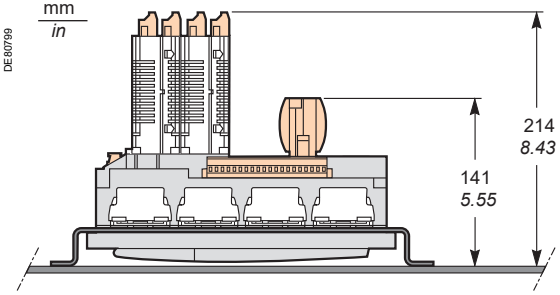

Top view of Sepam with MES120, flush-mounted in front panel with spring clips.
Mounting plate: 3 mm (0.11 in) thick.

Base unit
Mounting

Spring clip mounting direction

The direction in which the spring clips are mounted depends on the thickness of the mounting frame.
The top clips are mounted in the opposite direction to the bottom clips.

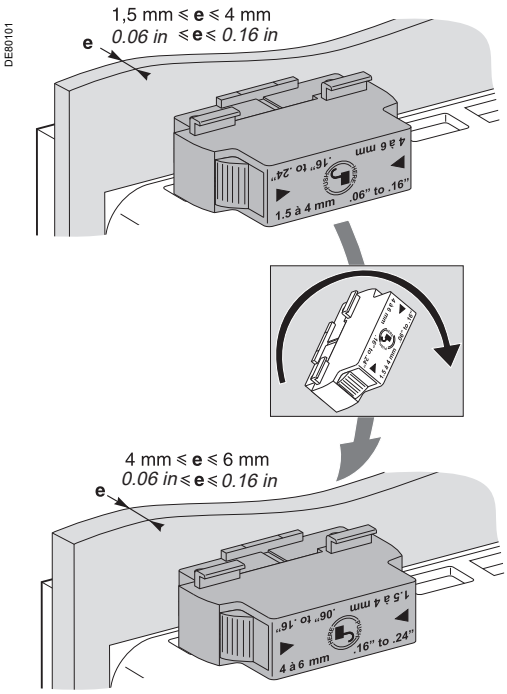

Base unit flush-mounting

Sepam is mounted on the mounting frame by 8 spring clips.
The mounting surface must be flat and stiff to guarantee tightness.

⚠ ⚠ DANGER

HAZARD OF ELECTRIC SHOCK, ELECTRIC ARC OR BURNS

- Only qualified personnel should install this equipment. Such work should be performed only after reading this entire set of instructions.
- NEVER work alone.
- Turn off all power supplying this equipment before working on or inside it. Consider all sources of power, including the possibility of backfeeding.
- Always use a properly rated voltage sensing device to confirm that all power is off.

Failure to follow these instructions will result in death or serious injury.

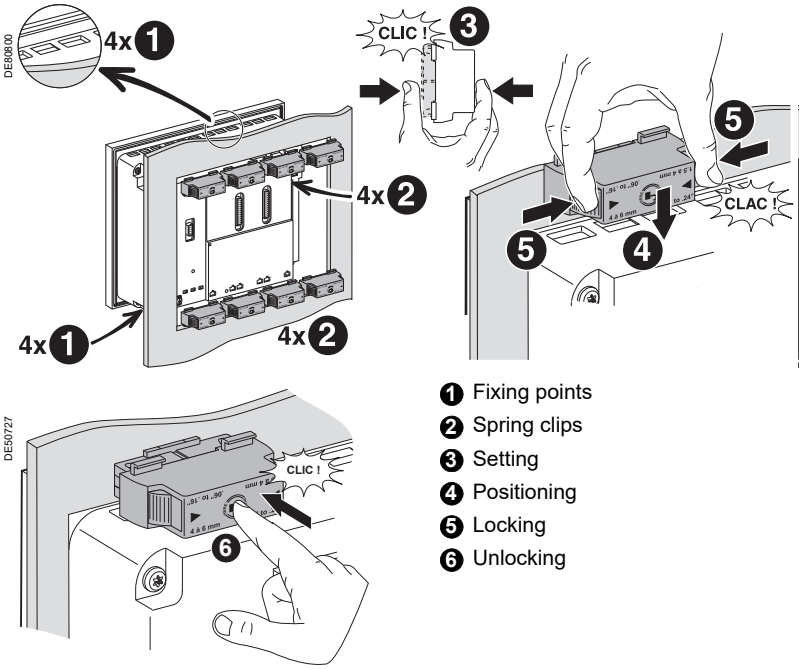

1. Fixing points
2. Spring clips
3. Setting
4. Positioning
5. Locking
6. Unlocking

Installing the terminal block identification label

A sticker showing the rear panel of Sepam and terminal assignments is supplied with each base unit to facilitate the installation and connection of Sepam and the MES120 input/output modules.
You may stick it in the location of your choice, e.g. on the side of an MES120 module or on the right-hand side panel of Sepam.

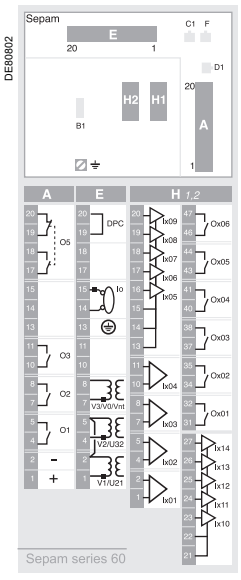

Terminal block identification label

Base unit
Connection

1 Base unit.
2 8 fixing points for 4 spring clips.
3 Red LED: Sepam unavailable.
4 Green LED: Sepam on.
5 Gasket.

(A) 20-pin connector for:
- 24 V DC to 250 V DC auxiliary supply
- 4 relay outputs.

(B1) Connector for 3 phase current I1, I2, I3 inputs

(C1) Communication port

(D1) Remote module connection port

(E) 20-pin connector for:
- 3 phase voltage V1, V2, V3 inputs
- 1 residual current I0 input

(F) Communication port 2 for ACE850 communication interfaces only

(H1) Connector for 1st MES120 input/output module.

(H2) Connector for 2nd MES120 input/output module.

⏚ Functional earth.

Rear panel description

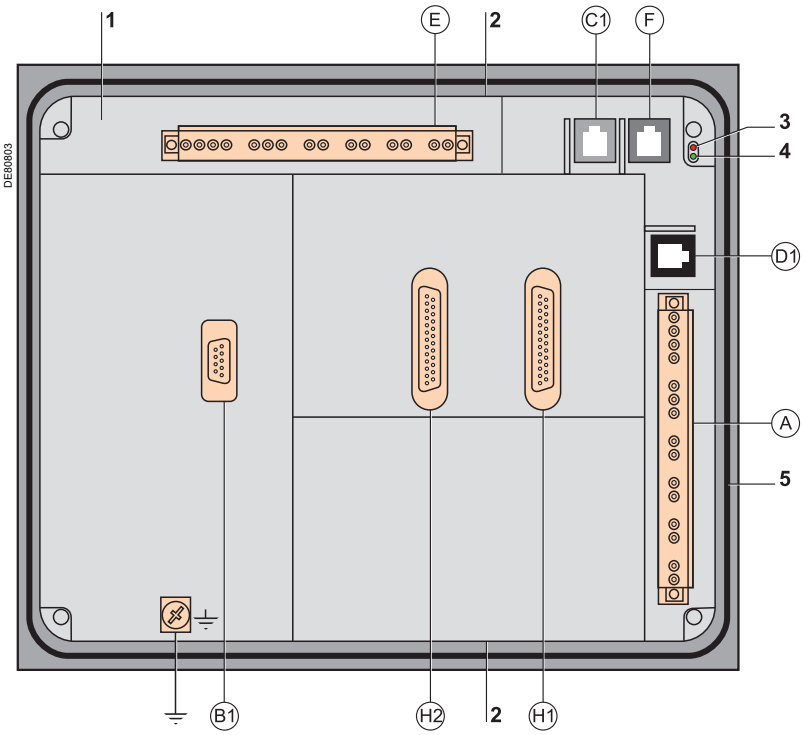

Connection characteristics

Connector	Type	Reference	Wiring
(A), (E)	Screw-type	CCA620	■ Wiring without fittings: □ 1 wire with max. cross-section 0.5 to 2.5 mm² (≥ AWG 20-12) or 2 wires with max. cross-section 0.5 to 1 mm² (≥ AWG 20-16) □ Stripped length: 8 to 10 mm (0.31 to 0.39 in) ■ Wiring with fittings: □ Recommended wiring with Schneider Electric fitting: - DZ5CE015D for 1 wire 1.5 mm² (AWG 16) - DZ5CE025D for 1 wire 2.5 mm² (AWG 12) - AZ5DE010D for 2 wires 1 mm² (AWG 18) □ Tube length: 8.2 mm (0.32 in) □ Stripped length: 8 mm (0.31 in)
	6.35 mm (0.25 in) ring lugs	CCA622	■ 6.35 mm ring or spade lugs (0.25 in) (1/4") ■ Wire with max. cross-section 0.2 to 2.5 mm² (≥ AWG 24-12) ■ Stripped length: 6 mm (0.23 in) ■ Use an appropriate tool to crimp the lugs on the wires ■ Maximum of 2 ring or spade lugs per terminal ■ Tightening torque: 0.7 to 1 Nm (8.85 lb-in)
(B1)	4 mm (0.15 in) ring lugs	CCA630 or CCA634, for connection of 1 A or 5 A CTs	■ Wire with cross-section 1.5 to 6 mm² (AWG 16-10) ■ Stripped length: 6 mm (0.23 in) ■ Use an appropriate tool to crimp the lugs on the wires ■ Tightening torque: 1.2 N.m (11 lb-in)
	RJ45 connector	CCA671, for connection of 3 LPCT sensors	Integrated with LPCT sensor
(C1)	White RJ45 connector		CCA612
(D1)	Black RJ45 connector		CCA770: L = 0.6 m (2 ft) CCA772: L = 2 m (6.6 ft) CCA774: L = 4 m (13.1 ft) CCA785 for MCS025 module: L = 2 m (6.6 ft)
(F)	Blue RJ45 connector		CCA614
DE51845 Functional earth	Ring lug		Earthing braid, to be connected to cubicle grounding ■ Flat copper braid with cross-section ≥ 9 mm² (> AWG 8) ■ Maximum length: 500 mm (19.68 in)

Base unit
Connection

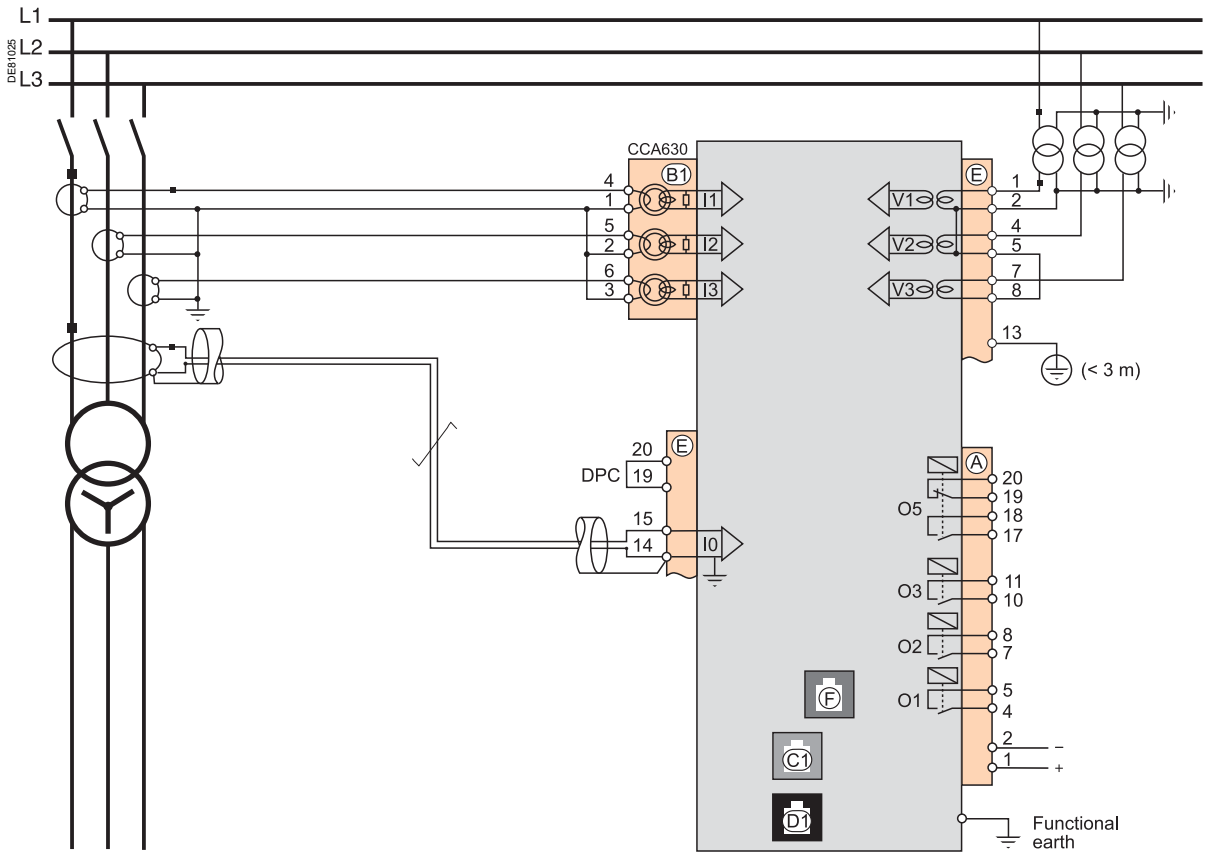

Note: *See connection characteristics page 346*

NOTICE

LOSS OF PROTECTION OR RISK OF NUISANCE TRIPPING

If the Sepam is no longer supplied with power or is in fail-safe position, the protection functions are no longer active and all the Sepam output relays are dropped out. Check that this operating mode and the watchdog relay wiring are compatible with your installation.

Failure to follow these instructions can result in equipment damage and unwanted shutdown of the electrical installation.

⚠ ⚠ DANGER

HAZARD OF ELECTRIC SHOCK, ELECTRIC ARC OR BURNS

- Only qualified personnel should install this equipment. Such work should be performed only after reading this entire set of instructions.
- NEVER work alone.
- Turn off all power supplying this equipment before working on or inside it. Consider all sources of power, including the possibility of backfeeding.
- Always use a properly rated voltage sensing device to confirm that all power is off.
- Start by connecting the device to the protective earth and to the functional earth.
- Screw tight all terminals, even those not in use.

Failure to follow these instructions will result in death or serious injury.

NOTICE

RISK OF DESTRUCTION OF THE SEPAM

Do not invert the connectors (A) and (E).

Failure to follow these instructions can result in equipment damage.

Base unit
Connection of Sepam C60

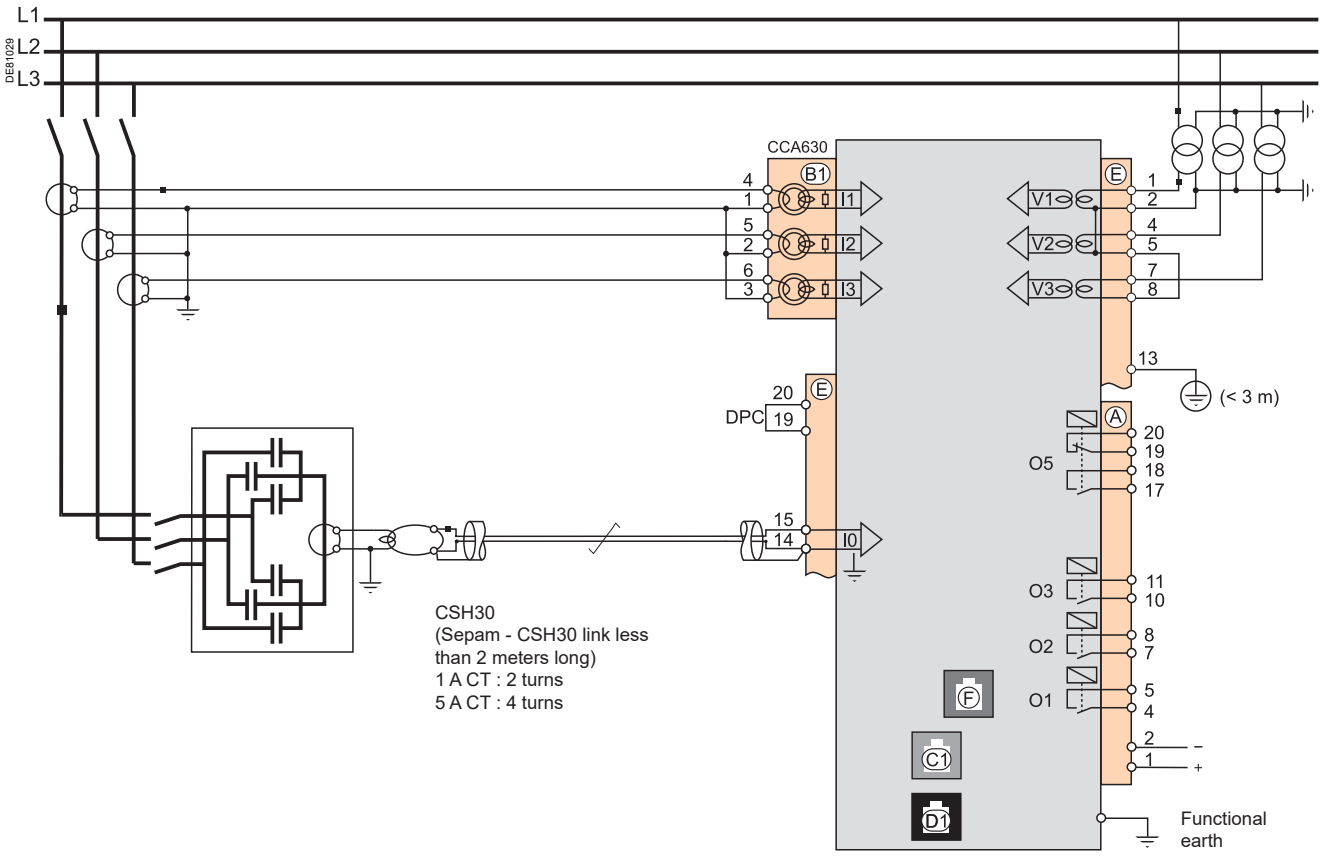

Connector	Type	Reference	Wiring
(B1)	4 mm (0.15 in) ring lugs	CCA630 or CCA634, for connection of 1 A or 5 A CTs	■ wire with cross-section 1.5 to 6 mm² (AWG 16-10) ■ stripped length: 6 mm (0.236 in) ■ use an appropriate tool to crimp the lugs on the wires ■ tightening torque: 1.2 N.m (11 lb-in)
	RJ45 connector	CCA671, for connection of 3 LPCT sensors	Integrated with LPCT sensor
DE51845 Functional earth	Ring lug		Earthing braid, to be connected to cubicle grounding: ■ flat copper braid with cross-section u 9 mm² (> AWG 8) ■ maximum length: 500 mm (19.68 in)

Connection characteristics of connectors (A), (E), (C1), (D1) : see page 346

Base unit
Connection of phase current inputs

Variant 1: phase current measurement by 3 x 1 A or 5 A CTs (standard connection)

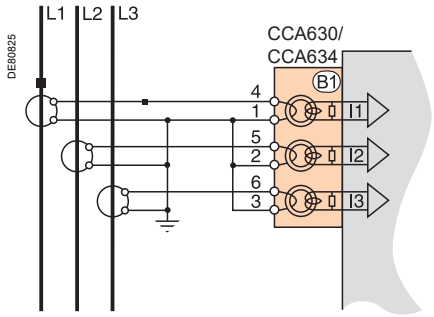

Description

Connection of 3 x 1 A or 5 A sensors to the CCA630 or CCA634 connector.
The measurement of the 3 phase currents allows the calculation of residual current.

Parameters

Sensor type	5 A CT or 1 A CT
Number of CTs	I1, I2, I3
Rated current (In)	1 A to 15 kA

Variant 2: phase current measurement by 2 x 1 A or 5 A CTs

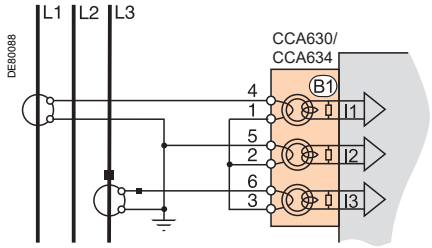

Description

Connection of 2 x 1 A or 5 A sensors to the CCA630 or CCA634 connector.
Measurement of phase 1 and 3 currents is sufficient for all protection functions based on phase current.
The phase current I2 is only assessed for metering functions, assuming that I0 = 0.
This connection diagram does not allow the measurement of the residual current.

Paramètres

Sensor type	5 A CT or 1 A CT
Number of CTs	I1, I3
Rated current (In)	1 A to 15 kA

Variant 3: phase current measurement by 3 LPCT type sensors

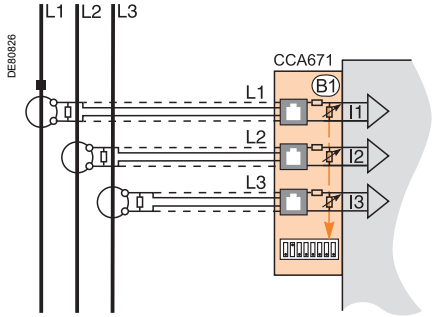

Description

Connection of 3 Low Power Current Transducer (LPCT) type sensors to the CCA671 connector. It is necessary to connect 3 sensors; if only one or two sensors are connected, Sepam goes into fail-safe position.
Measurement of the 3 phase currents allows the calculation of residual current.

Parameters

Sensor type	LPCT
Number of CTs	I1, I2, I3
Rated current (In)	25, 50, 100, 125, 133, 200, 250, 320, 400, 500, 630, 666, 1000, 1600, 2000 or 3150 A

Note: *Parameter In must be set twice:*

- *Software parameter setting using the advanced UMI or the SFT2841 software tool*
- *Hardware parameter setting using microswitches on the CCA671 connector*

Variant 1: residual current calculation by sum of 3 phase currents

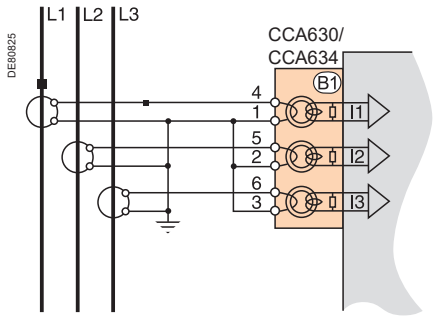

Description
Residual current is calculated by the vector sum of the 3 phase currents I1, I2 and I3, measured by 3 x 1 A or 5 A CTs or by 3 LPCT type sensors.
See current input connection diagrams.

Parameters

Residual current	Rated residual current	Measuring range
Sum of 3 Is	In0 = In, CT primary current	0.01 to 40 In0 (minimum 0.1 A)

Variant 2: residual current measurement by CSH120, CSH200 or CSH300 core balance CT (standard connection)

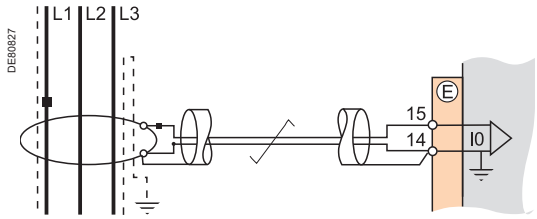

Description
Arrangement recommended for the protection of isolated or compensated neutral systems, in which very low fault currents need to be detected.

Parameters

Residual current	Rated residual current	Measuring range
2 A rating CSH	In0 = 2 A	0.1 to 40 A
20 A rating CSH	In0 = 20 A	0.2 to 400 A

Variant 3: residual current measurement by 1 A or 5 A CTs and CCA634

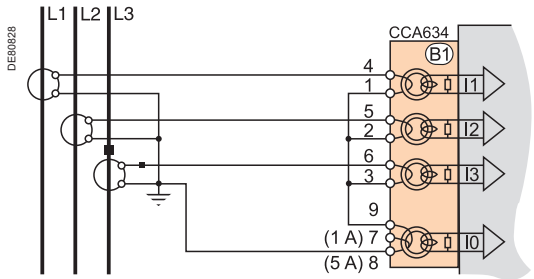

Description
Residual current measurement by 1 A or 5 A CTs
- Terminal 7: 1 A CT
- Terminal 8: 5 A CT

Parameters

Residual current	Rated residual current	Measuring range
1 A CT	In0 = In, CT primary current	0.01 to 20 In0 (minimum 0.1 A)
5 A CT	In0 = In, CT primary current	0.01 to 20 In0 (minimum 0.1 A)

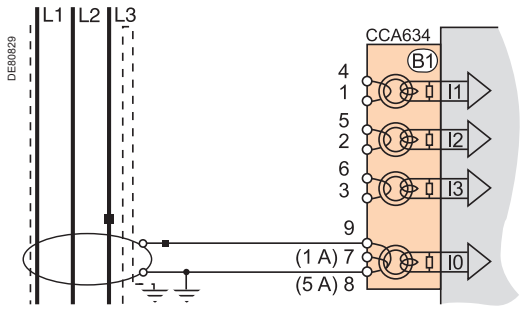

Base unit
Connection of residual current inputs

Variant 4: residual current measurement by 1 A or 5 A CTs and CSH30 interposing ring CT

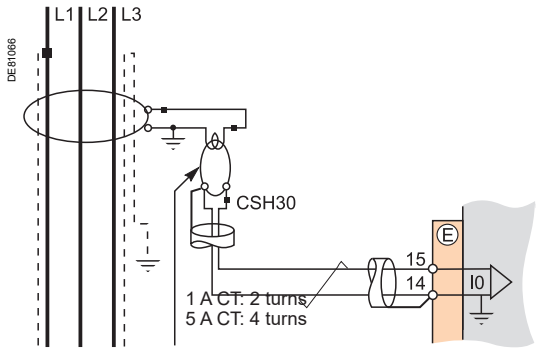

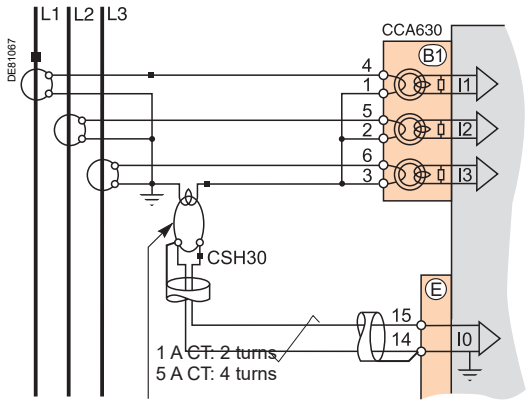

Description

The CSH30 interposing ring CT is used to connect 1 A or 5 A CTs to Sepam to measure residual current:

- CSH30 interposing ring CT connected to 1 A CT: make 2 turns through CSH primary
- CSH30 interposing ring CT connected to 5 A CT: make 4 turns through CSH primary.

Paramètres

Residual current	Rated residual current	Measuring range
1 A CT	In0 = In, CT primary current	0.01 to 20 In0 (minimum 0.1 A)
5 A CT	In0 = In, CT primary current	0.01 to 20 In0 (minimum 0.1 A)

Variant 5: residual current measurement by core balance CT with ratio of 1/n (n between 50 and 1500)

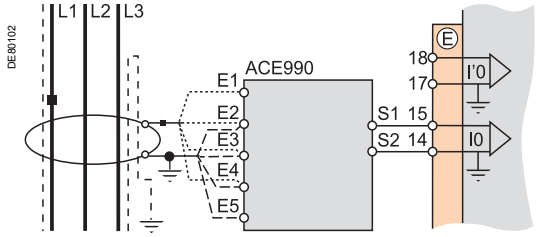

Description

The ACE990 is used as an interface between a MV core balance CT with a ratio of 1/n (50 ⩽ n ⩽ 1500) and the Sepam residual current input.
This arrangement allows the continued use of existing core balance CTs on the installation.

Parameters

Residual current	Rated residual current	Measuring range
ACE990 - range 1 (0.00578 ⩽ k ⩽ 0.04)	In0 = Ik.n(1)	0.01 to 20 In0 (minimum 0.1 A)
ACE990 - range 2 (0.0578 ⩽ k ⩽ 0.26316)	In0 = Ik.n(1)	0.01 to 20 In0 (minimum 0.1 A)

(1) *n = number of core balance CT turns*
k = factor to be determined according to ACE990 wiring and setting range used by Sepam

Variant 6: neutral point current measurement for the restricted earth protection (ANSI 64REF) and for a network where the neutral is not distributed

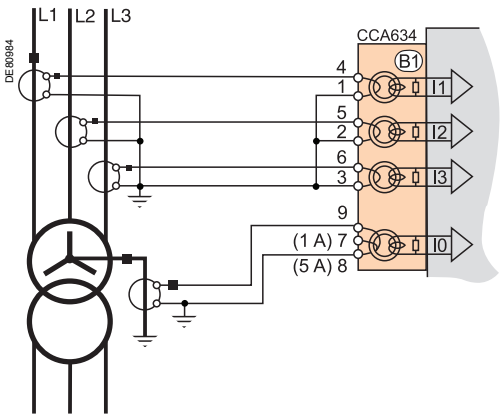

Description

The residual current is measured by taking the sum of the 3 phase currents using the CT whose secondary current is 1 A or 5 A.
The neutral point current is measured using the CT whose secondary current is 1 A or 5 A:

- Terminal 7: 1 A CT
- Terminal 8: 5 A CT

Parameters

Secondary current	Rated residual current	Measuring range
1 A CT	In0 = phase CT primary current In	0.01 to 20 In0 (0.1 A minimum)
5 A CT	In0 = phase CT primary current In	0.01 to 20 In0 (0.1 A minimum)

Base unit
Connection of low voltage residual current inputs

Variant 1: residual current measurement by CTs on the neutral earthing link (with or without CSH30 interposing ring CT)

Description
Residual current is measured with a 1 A or 5 A CT on the neutral point.
These connection diagrams are incompatible with those for the ANSI 64REF function.

Parameters

Residual current	Rated residual current	Measuring range
1 A CT	In0 = neutral point CT In	0.01 to 20 In0
5 A CT	In0 = neutral point CT In	0.01 to 20 In0

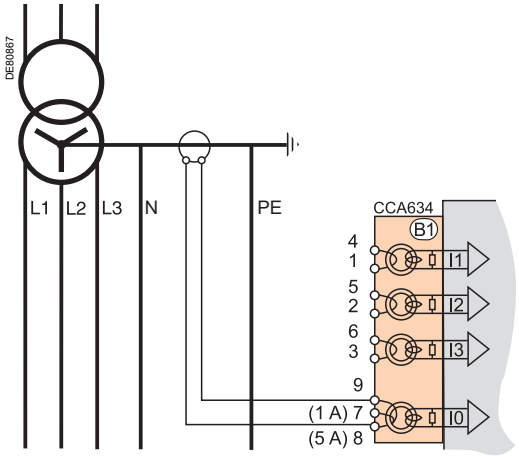

Connection on TN-S network.

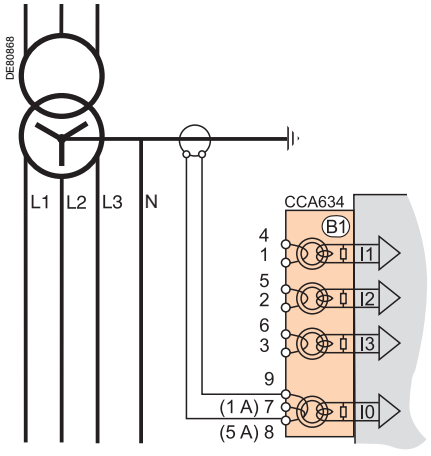

Connection on TT network.

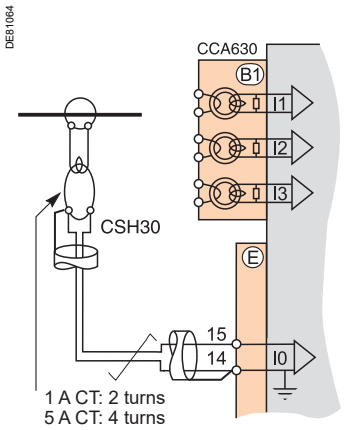

Connection with CSH30.

Variant 2: residual current measurement by CSH120, CSH200 or CSH300 core balance CT on the neutral earthing link

Description
Residual current is measured with a core balance CT on the neutral point. Core balance CTs are recommended for measuring very low fault currents provided that the earth fault current remains below 2 kA. Above this value it is advisable to use the standard variant 1.
These connection diagrams are incompatible with those for the ANSI 64REF function.

Parameters

Residual current	Rated residual current	Measuring range
2 A rating CSH	In0 = 2 A	0.1 to 40 A
20 A rating CSH	In0 = 20 A	0.2 to 400 A

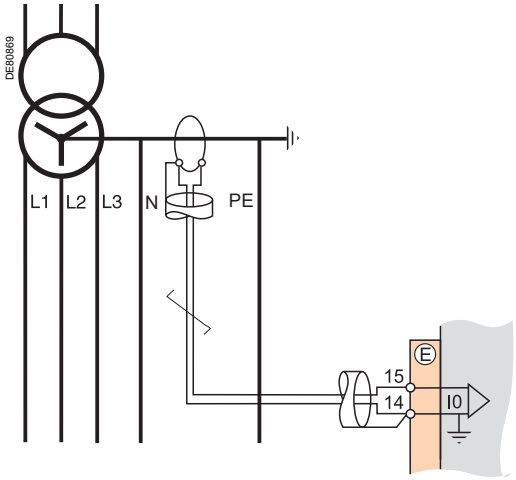

Connection on TN-S network.

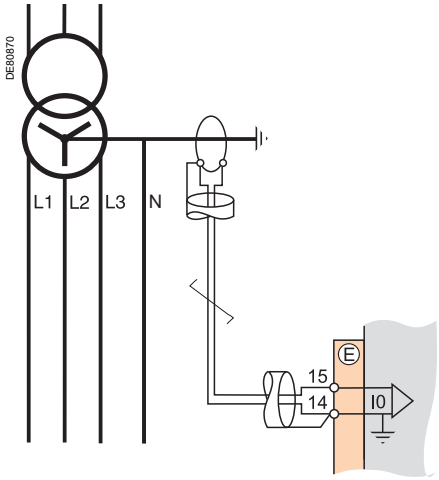

Connection on TT network.

Base unit
Connection of low voltage residual current inputs

Variant 3: residual current measurement by sum of 3 phase currents and neutral current measurement by CSH120, CSH200 or CSH300 core balance CT

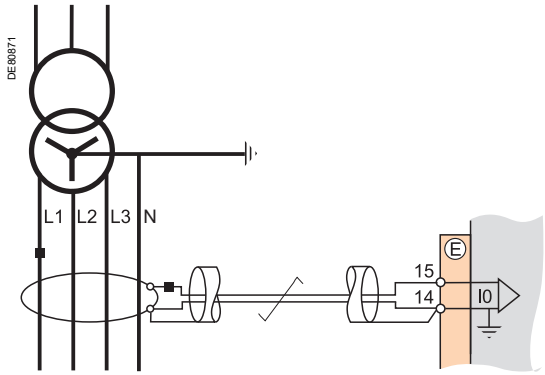

Connection on TN-S and TT networks.

Description

Measurement by core balance CT is recommended for measuring very low fault currents.
This connection diagram is incompatible with the ANSI 64REF function.

Parameters

Residual current	Rated residual current	Measuring range
2 A rating CSH	In0 = 2 A	0.1 to 40 A
20 A rating CSH	In0 = 20 A	0.2 to 400 A

Variant 4: residual current measurement by sum of 3 phase currents and neutral current measurement by 1 A or 5 A CTs and CSH30 interposing ring CT

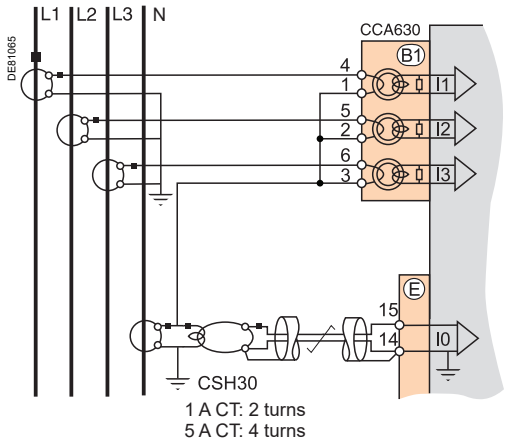

Connection on TN-S and TT networks.

Description

The phase and neutral CTs should have the same primary and secondary currents.
The CSH30 interposing ring CT is used to connect 1 A or 5 A CTs to Sepam to measure residual current:
- Connection of CSH30 interposing ring CT to 1 A CT: make 2 turns through CSH primary
- Connection of CSH30 interposing ring CT to 5 A CT: make 4 turns through CSH primary.

According to the connection between the neutral point and earth, this connection diagram is incompatible with the ANSI 64REF function.

Parameters

Residual current	Rated residual current	Measuring range
1 A CT	In0 = phase CT primary current In	0.01 to 20 In0
5 A CT	In0 = phase CT primary current In	0.01 to 20 In0

Variant 5: residual current measurement by sum of 3 phase currents and neutral current measurement by 1 A or 5 A CTs and CCA634 connector

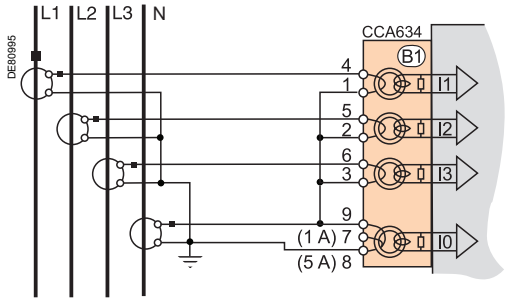

Connection on TN-S and TT networks.

Description

The phase and neutral CTs should have the same primary and secondary currents.
Residual current measurement by 1 A or 5 A CTs.
- Terminal 7: 1 A CT
- Terminal 8: 5 A CT

According to the connection between the neutral point and earth, this connection diagram is incompatible with the ANSI 64REF function.

Parameters

Residual current	Rated residual current	Measuring range
1 A CT	In0 = phase CT primary current In	0.01 to 20 In0
5 A CT	In0 = phase CT primary current In	0.01 to 20 In0

Base unit
Connection of low voltage current inputs for restricted earth protection (ANSI 64REF)

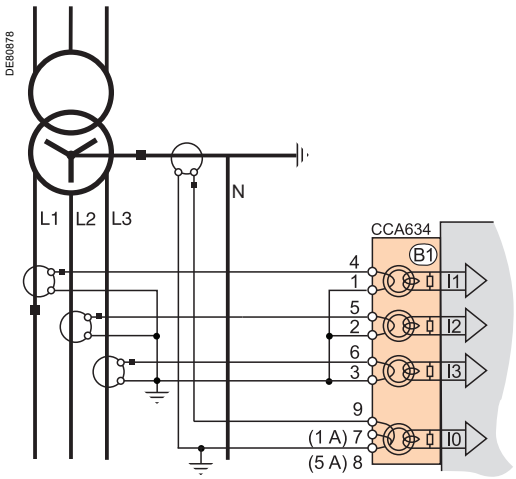

Connection on TT network.

Description

These 3 diagrams correspond to the connections as found in the various low voltage diagrams where the neutral is distributed.

They are used to work out the residual current (taking the sum of the 3 phase currents) and the transformer neutral point current for operation of the restricted earth protection function (ANSI 64 REF).

The residual current is measured by taking the sum of the 3 phase currents using the CT whose secondary current is 1 A or 5 A.

The neutral point current is measured using the CT whose secondary current is 1 A or 5 A:

- Terminal 7: 1 A CT
- Terminal 8: 5 A CT

Parameters

Secondary current	Rated residual current	Measuring range
1 A CT	In0 = phase CT primary current In	0.01 to 20 In0
5 A CT	In0 = phase CT primary current In	0.01 to 20 In0

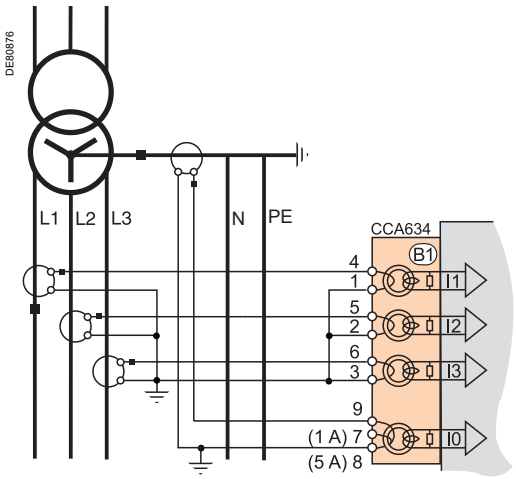

Connection on TN-S network.

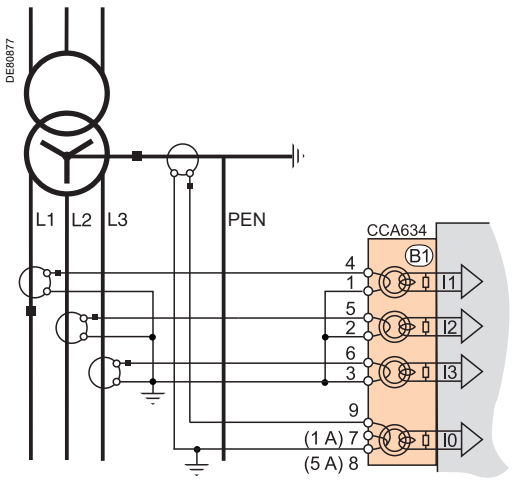

Connection on TN-C network.

Phase voltage input connection variants

Variant 1: measurement of 3 phase-to-neutral voltages (3 V, standard connection)

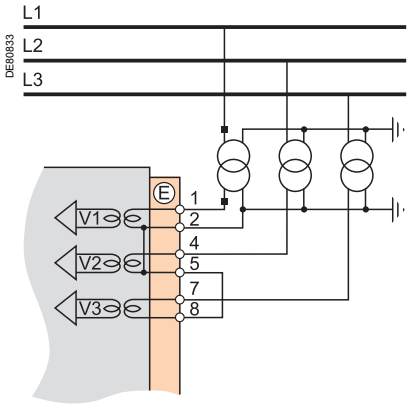

Measurement of the 3 phase-to-neutral voltages allows the calculation of residual voltage, V0Σ.

Variant 2: measurement of 2 phase-to-phase voltages (2 U)

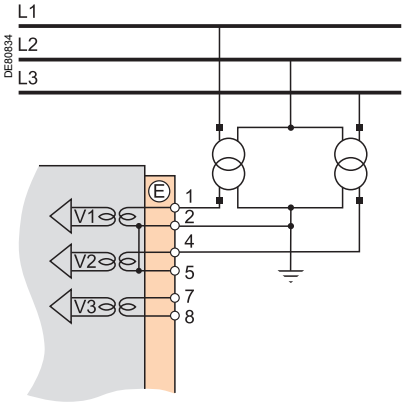

This variant does not allow the calculation of residual voltage.

Variant 3: measurement of 1 phase-to-phase voltage (1 U)

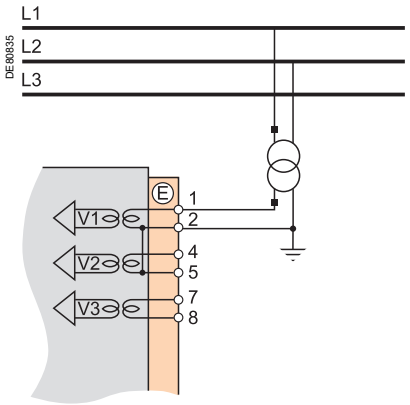

This variant does not allow the calculation of residual voltage.

Variant 4: measurement of 1 phase-to-neutral voltage (1 V)

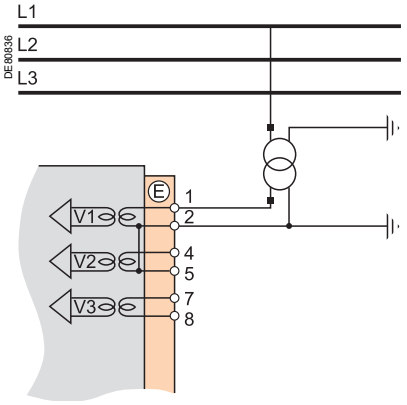

This variant does not allow the calculation of residual voltage.

Residual voltage input connection variants

Variant 5: measurement of residual voltage V0

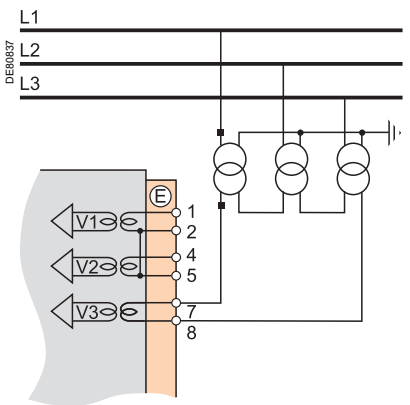

Variant 6: measurement of residual voltage Vnt in generator neutral point

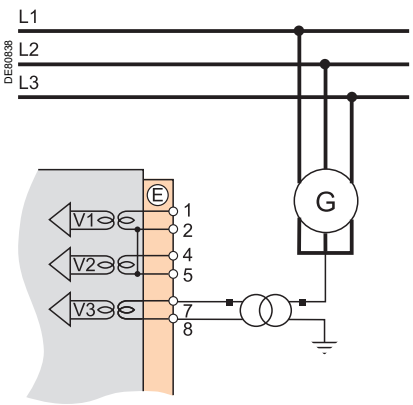

Base unit
Connection of low voltage phase voltage inputs

Variant 1: TN-S and TN-C networks

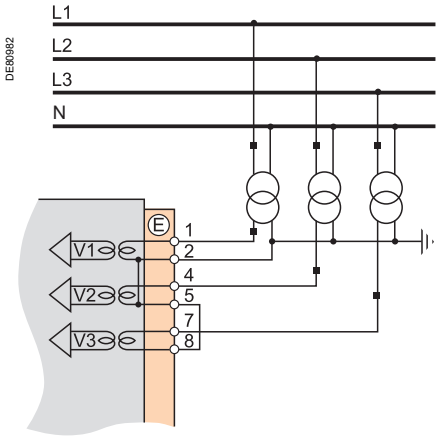

When a ground fault occurs on a TN-S or TN-C network, the neutral potential is not affected: the neutral can act as a reference for the VTs.

Variant 2: TT and IT networks

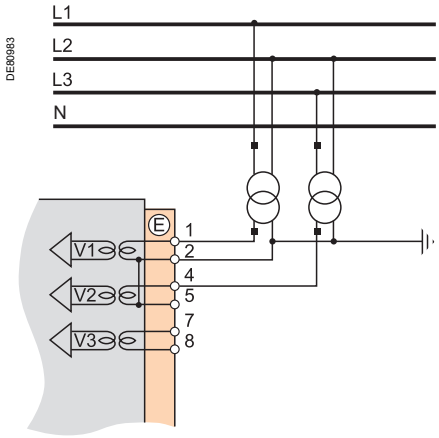

When a ground fault occurs on a TT or IT network, the neutral potential is affected: the neutral cannot act as a reference for the VTs, phase-to-phase voltages must be used on both phases.

Base unit
Functions available according to connected voltage inputs

The availability of certain protection and metering functions depend on the phase and residual voltages measured by Sepam.

The table below gives the voltage input connection variants for which for each protection and metering function dependent on measured voltages is available.
Example:
The directional overcurrent protection function (ANSI 67N/67NC) uses residual voltage V0 as a polarization value.
It is therefore operational in the following cases:
■ measurement of the 3 phase-to-neutral voltages and calculation of V0Σ (3 V + V0Σ, variant 1)
■ measurement of residual voltage V0 (variant 5).
The protection and metering functions which do not appear in the table below are available regardless of the voltages measured.

Phase voltages measured (connection variant)		**3 V + V0Σ** (var. 1)			**2 U** (var. 2)			**1 U** (var. 3)			**1 V** (var. 4)		
Residual voltage measured (connection variant)		**–**	**V0** (v. 5)	**Vnt** (v. 6)	**–**	**V0** (v. 5)	**Vnt** (v. 6)	**–**	**V0** (v. 5)	**Vnt** (v. 6)	**–**	**V0** (v. 5)	**Vnt** (v. 6)
Protection functions dependent on voltages measured													
Directional phase overcurrent	67	■	■	■	■	■	■						
Directional earth fault	67N/67NC	■	■	■		■			■			■	
Directional active overpower	32P	■	■	■	■	■	■						
Directional reactive active overpower	32Q	■	■	■	■	■	■						
Directional active underpower	37P	■	■	■	■	■	■						
Field loss (underimpedance)	40	■	■	■	■	■	■						
Voltage-restrained overcurrent	50V/51V	■	■	■	■	■	■						
Underimpedance	21B	■	■	■	■	■	■						
Positive sequence undervoltage	27D	■	■	■	■	■	■						
Remanent undervoltage	27R	■	■	■	■	■	■	■	■	■	■	■	■
Undervoltage (L-L or L-N)	27	■	■	■	■	■	■	■	■	■	■	■	■
Overvoltage (L-L or L-N)	59	■	■	■	■	■	■	■	■	■	■	■	■
Neutral voltage displacement	59N	■	■	■		■	■		■	■		■	■
Negative sequence overvoltage	47	■	■	■	■	■	■					■	
Overfrequency	81H	■	■	■	■	■	■	■	■	■	■	■	■
Underfrequency	81L	■	■	■	■	■	■	■	■	■	■	■	■
Rate of change of frequency	81R	■	■	■	■	■	■						
Measurements dependent on voltages measured													
Phase-to-phase voltage U21, U32, U13		■	■	■	■	■	■	U21	U21	U21			
Phase-to-neutral voltage V1, V2, V3		■	■	■		■					V1	V1	V1
Residual voltage V0		■	■	■		■			■			■	
Neutral point voltage Vnt				■			■			■			■
Positive sequence voltage Vd / negative sequence voltage Vi		■	■	■	■	■	■						
Frequency		■	■	■	■	■	■	■	■	■	■	■	■
Active / reactive / apparent power: P, Q, S		■	■	■	■	■	■	■	■	■			
Peak demand power PM, QM		■	■	■	■	■	■	■	■	■			
Active / reactive / apparent power per phase: P1/P2/P3, Q1/Q2/Q3, S1/S2/S3		■ (1)	■ (1)	■ (1)		■ (1)					P1/ Q1/S1	P1/ Q1/S1	P1/ Q1/S1
Power factor		■	■	■	■	■	■	■	■	■			
Calculated active and reactive energy (±Wh, ±VARh)		■	■	■	■	■	■	■	■	■			
Total harmonic distortion, voltage Uthd		■	■	■	■	■	■	■	■	■			
Phase displacement φ0		■	■	■		■			■			■	
Phase displacement φ1, φ2, φ3		■	■	■	■	■	■						
Apparent positive sequence impedance Zd		■	■	■	■	■	■						
Apparent phase-to-phase impedances Z21, Z32, Z13		■	■	■	■	■	■						

■ *Function available*
(1) *If all 3 phase currents are measured.*

1 A/5 A current transformers

058731N



ARJA1.

058733N



ARJP3.

Function

Sepam may be connected to any standard 1 A or 5 A current transformer.
Schneider Electric offers a range of current transformers to measure primary currents from 50 A to 2500 A.
Consult us for more information.

Sizing of current transformers

Current transformers are sized so as not to be saturated by the current values they are required to measure accurately (minimum 5 In).

Overcurrent protection functions

■ with DT tripping curve:
the saturation current must be 1.5 times greater than the setting
■ with IDMT tripping curve:
the saturation current must be 1.5 times greater than the highest working value on the curve.

Practical solution when there is no information on the settings

Rated secondary current (in)	Accuracy burden	Accuracy class	CT secondary resistance R_{CT}	Wiring resistance Rf
1 A	2.5 VA	5P 20	< 3 Ω	< 0.075 Ω
5 A	7.5 VA	5P 20	< 0.2 Ω	< 0.075 Ω

Restricted earth fault differential protection (ANSI 64REF)

■ The primary current of the neutral point current transformer must comply with the following rule:
In0 ⩾ 0.1 x I_{1P}, where I_{1P} is the phase-to-earth short-circuit current.

■ Neutral current transformer must be:

□ type 5P20 with an accuracy burden $VA_{CT} \geqslant Rw.in0^2$

□ or defined by a knee-point voltage $Vk \geqslant (R_{CT} + Rw).20.in0$.

■ Phase current transformers must be:

□ type 5P, with an accuracy-limit factor $FLP \geqslant \max\left(\mathbf{20},\ \mathbf{1.6}\frac{I_{3P}}{In},\ \mathbf{2.4}\frac{I_{1P}}{In}\right)$
and an accuracy burden $VA_{CT} \geqslant Rw.in^2$

□ or defined by a knee-point voltage $Vk \geqslant (R_{CT} + Rw) \max\left(\mathbf{20},\ \mathbf{1.6}\frac{I_{3P}}{In},\ \mathbf{2.4}\frac{I_{1P}}{In}\right)$ in.

■ Formula legend:
in: phase CT rated secondary current
in0: neutral point CT rated secondary current
R_{CT}: phase CT or neutral CT internal resistance
Rw: resistance of the CT load and wiring
In: phase CT rated primary current
In0: neutral point CT rated primary current
I_{3P}: three-phase short-circuit current
I_{1P}: phase-to-earth short-circuit current

6

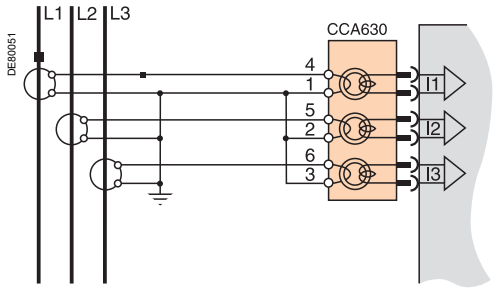

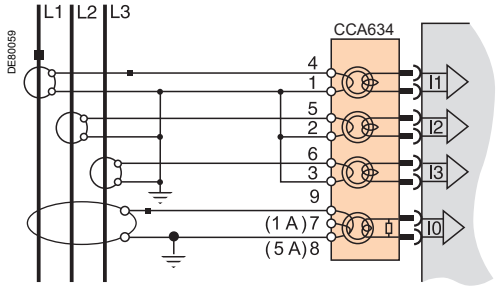

CCA630/CCA634 connector

Function

The current transformers (1 A or 5 A) are connected to the CCA630 or CCA634 connector on the rear panel of Sepam:

■ The CCA630 connector is used to connect three phase current transformers to Sepam.

■ The CCA634 connector is used to connect three phase current transformers and one residual current transformer to Sepam.

The CCA630 and CCA634 connectors contain interposing ring CTs with through primaries, which ensure impedance matching and isolation between the 1 A or 5 A circuits and Sepam when measuring phase and residual currents.

The connectors can be disconnected with the power on since disconnection does not open the CT secondary circuit.

⚠ ⚠ DANGER

HAZARD OF ELECTRIC SHOCK, ELECTRIC ARC OR BURNS

■ Only qualified personnel should install this equipment. Such work should be performed only after reading this entire set of instructions and checking the technical characteristics of the device.

■ NEVER work alone.

■ Turn off all power supplying this equipment before working on or inside it. Consider all sources of power, including the possibility of backfeeding.

■ Always use a properly rated voltage sensing device to confirm that all power is off.

■ To disconnect the Sepam unit current inputs, unplug the CCA630 or CCA634 connector without disconnecting the wires from it. The CCA630 and CCA634 connectors ensure continuity of the current transformer secondary circuits.

■ Before disconnecting the wires connected to the CCA630 or CCA634 connector, short-circuit the current transformer secondary circuits.

Failure to follow these instructions will result in death or serious injury.

1 A/5 A Current transformers

MT10490



Connecting and assembling the CCA630 connector

1. Open the 2 side shields for access to the connection terminals. The shields can be removed, if necessary, to make wiring easier. If removed, they must be replaced after wiring.
2. If necessary, remove the bridging strap linking terminals 1, 2 and 3. This strap is supplied with the CCA630.
3. Connect the wires using 4 mm (0.16 in) ring lugs and check the tightness of the 6 screws that guarantee the continuity of the CT secondary circuits.
The connector accommodates wires with cross-sections of 1.5 to 6 mm² (AWG 16-10).
4. Close the side shields.
5. Plug the connector into the 9-pin inlet on the rear panel (item Ⓑ).
6. Tighten the 2 CCA630 connector fastening screws on the rear panel of Sepam.

DE80068

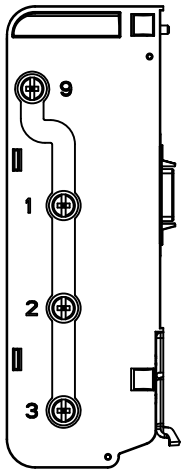

Bridging of terminals 1, 2, 3 and 9

DE80069

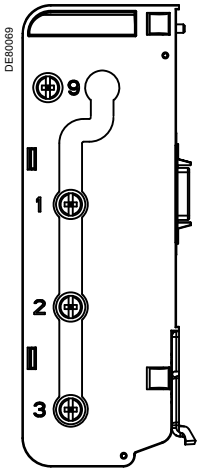

Bridging of terminals 1, 2 and 3

Connecting and assembling the CCA634 connector

1. Open the 2 side shields for access to the connection terminals. The shields can be removed, if necessary, to make wiring easier. If removed, they must be replaced after wiring.
2. According to the wiring required, remove or reverse the bridging strap. This is used to link either terminals 1, 2 and 3, or terminals 1, 2, 3 and 9 (see picture opposite).
3. Use terminal 7 (1 A) or 8 (5 A) to measure the residual current according to the CT secondary.
4. Connect the wires using 4 mm (0.16 in) ring lugs and check the tightness of the 6 screws that guarantee the continuity of the CT secondary circuits.
The connector accommodates wires with cross-sections of 1.5 to 6 mm² (AWG 16-10).
The wires only exit from the base.
5. Close the side shields.
6. Insert the connector pins into the slots on the base unit.
7. Flatten the connector against the unit to plug it into the 9-pin SUB-D connector (principle similar to that of the MES module).
8. Tighten the mounting screw.

6

NOTICE

HAZARD OF IMPROPER OPERATION

Do not use a CCA634 on connector B1 and residual current input I0 on connector E (terminals 14 and 15) simultaneously.

Even if it is not connected to a sensor, a CCA634 on connector B1 will disturb input I0 on connector E.

Failure to follow these instructions can result in equipment damage.

PE50031



CLP1 LPCT sensor

Function

Low Power Current Transducer (LPCT) type sensors are voltage-output sensors, which are compliant with the IEC 60044-8 standard.
The Schneider Electric range of LPCTs includes the following sensors: CLP1, CLP2, CLP3, TLP130, TLP160 and TLP190.

DE51674

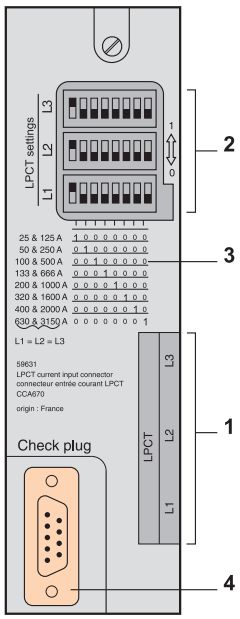

CCA670/CCA671 connector

Function

The 3 LPCT sensors are connected to the CCA670 or CCA671 connector on the rear panel of Sepam.
The connection of only one or two LPCT sensors is not allowed and causes Sepam to go into fail-safe position.
The two CCA670 and CCA671 interface connectors serve the same purpose, the difference being the position of the LPCT sensor plugs:
- CCA670: lateral plugs, for Sepam series 20 and Sepam series 40
- CCA671: radial plugs, for Easergy Sepam series 60 and Easergy Sepam series 80.

Description

1 3 RJ45 plugs to connect the LPCT sensors.
2 3 blocks of microswitches to set the CCA670/CCA671 to the rated phase current value.
3 Microswitch setting/selected rated current equivalency table (2 In values per position).
4 9-pin sub-D connector to connect test equipment (ACE917 for direct connector or via CCA613).

Rating of CCA670/CCA671 connectors

The CCA670/CCA671 connector must be rated according to the rated primary current In measured by the LPCT sensors. In is the current value that corresponds to the rated secondary current of 22.5 mV. The possible settings for In are (in A): 25, 50, 100, 125, 133, 200, 250, 320, 400, 500, 630, 666, 1000, 1600, 2000, 3150.
The selected In value should be:
- entered as a Sepam general setting
- configured by microswitch on the CCA670/CCA671 connector.

Operating mode:
1. Use a screwdriver to remove the shield located in the "LPCT settings" zone; the shield protects 3 blocks of 8 microswitches marked L1, L2, L3.
2. On the L1 block, set the microswitch for the selected rated current to "1" (2 In values per microswitch).
- The table of equivalencies between the microswitch settings and the selected rated current In is printed on the connector
- Leave the 7 other microswitches set to "0".

3. Set the other 2 blocks of switches L2 and L3 to the same position as the L1 block and close the shield.

NOTICE

HAZARD OF NON-OPERATION
- Set the microswitches for the CCA670/CCA671 connector before commissioning the device.
- Check that only one microswitch is in position 1 for each block L1, L2, L3 and that no microswitch is in the center position.
- Check that the microswitch settings on all 3 blocks are identical.

Failure to follow these instructions can result in equipment damage.

LPCT type current sensors
Test accessories

Accessory connection principle

⚠ DANGER

HAZARD OF ELECTRIC SHOCK, ELECTRIC ARC OR BURNS

- Only qualified personnel should install this equipment. Such work should be performed only after reading this entire set of instructions.
- NEVER work alone.
- Turn off all power supplying this equipment before working on or inside it. Consider all sources of power, including the possibility of backfeeding.
- Always use a properly rated voltage sensing device to confirm that all power is off.

Failure to follow these instructions will result in death or serious injury.

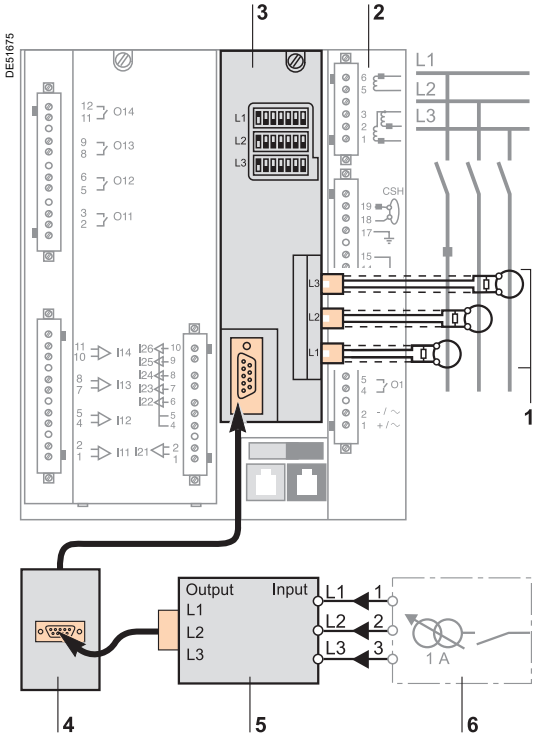

1 LPCT sensor, equipped with a shielded cable fitted with a yellow RJ 45 plug which is plugged directly into the CCA670/CCA671 connector.

2 Sepam protection unit.

3 CCA670/CCA671 connector, LPCT voltage interface, with microswitch setting of rated current:
- CCA670: lateral plugs for Sepam series 20 and Sepam series 40
- CCA671: radial plugs for Sepam Easergy series 60 and Easergy Sepam series 80.

4 CCA613 remote test plug, flush-mounted on the front of the cubicle and equipped with a 3-meter (9.8 ft) cord to be plugged into the test plug of the CCA670/CCA671 interface connector (9-pin sub-D).

5 ACE917 injection adapter, to test the LPCT protection chain with a standard injection box.

6 Standard injection box.

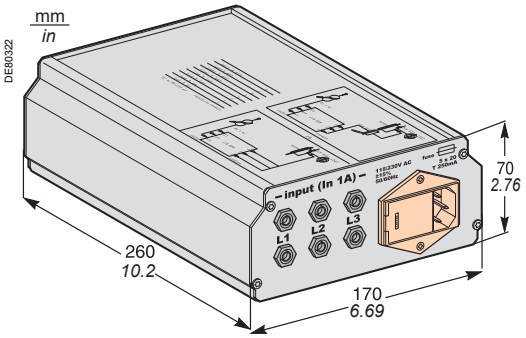

ACE917 injection adapter

Function

The ACE917 adapter is used to test the protection chain with a standard injection box, when Sepam is connected to LPCT sensors.
The ACE917 adapter is inserted between:

- The standard injection box
- The LPCT test plug:
  - integrated in the Sepam CCA670/CCA671 interface connector
  - or transferred by means of the CCA613 accessory.

The following are supplied with the ACE917 injection adapter:

- Power supply cord
- 3-meter (9.8 ft) cord to connect the ACE917 to the LPCT test plug on CCA670/CCA671 or CCA613.

Characteristics

Power supply	115/230 V AC
Protection by time-delayed fuse 5 mm x 20 mm (0.2 x 0.79 in)	0.25 A rating

CCA613 remote test plug

Function

The CCA613 test plug, flush-mounted on the front of the cubicle, is equipped with a 3-meter (9.8 ft) cord to transfer data from the test plug integrated in the CCA670/ CCA671 interface connector on the rear panel of Sepam.

Dimensions

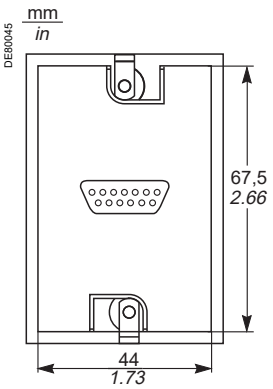

Front view with cover lifted.

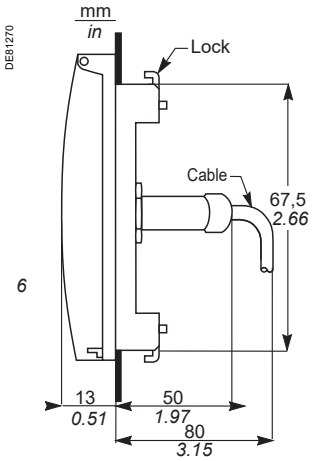

Right side view.

⚠ CAUTION

HAZARD OF CUTS
Trim the edges of the cut-out plates to remove any jagged edges.

Failure to follow these instructions can result in injury.

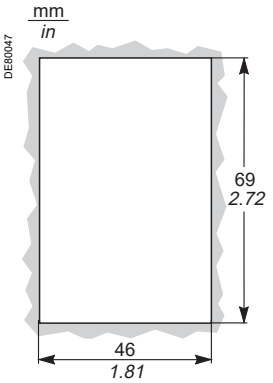

Cut-out.

CSH120, CSH200 and CSH300 Core balance CTs

PE50032



CSH120 and CSH200 core balance CTs.

Function

The specifically designed CSH120, CSH200 and CSH300 core balance CTs are for direct residual current measurement. The only difference between them is the diameter.

Due to their low voltage insulation, they can only be used on cables.

Note: *You must use an interface ACE990 with a core balance CT other than a CSH120, a CSH200 or a CSH300, even if this core balance CT has the same transformation ratio than a CSH120, a CSH200 or a CSH300.*

Characteristics

		CSH120	CSH200	CSH300
Inner diameter		120 mm (4.7 in)	196 mm (7.72 in)	291 mm (11.46 in)
Weight		0.6 kg (1.32 lb)	1.4 kg (3.09 lb)	2.4 Kg (5.29 lb)
Accuracy	1 CT	±5% at 20°C (68°F)		
		±6% max. from -25°C to 70°C (-13°F to +158°F)		
	2 CTs in parallel	-	±10%	-
Transformation ratio		1/470		
Maximum permissible current	1 CT	20 kA - 1 s		
	2 CTs in parallel	-	6 kA - 1 s	-
Operating temperature		-25°C to +70°C (-13°F to +158°F)		
Storage temperature		-40°C to +85°C (-40°F to +185°F)		

Dimensions

DE60249

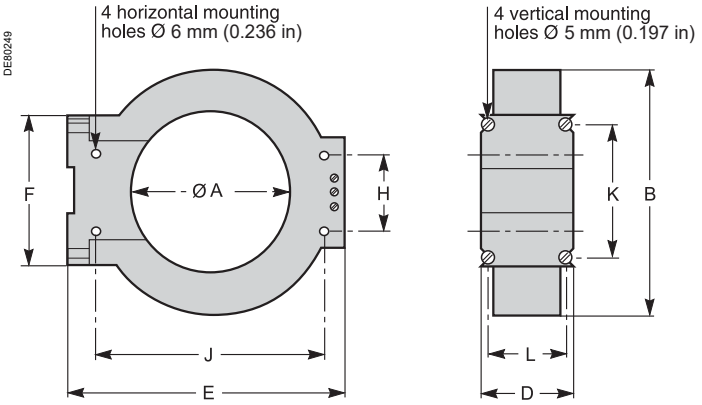

Dimensions	A	B	D	E	F	H	J	K	L
CSH120 (in)	120 (4.75)	164 (6.46)	44 (1.73)	190 (7.48)	80 (3.15)	40 (1.57)	166 (6.54)	65 (2.56)	35 (1.38)
CSH200 (in)	196 (7.72)	256 (10.1)	46 (1.81)	274 (10.8)	120 (4.72)	60 (2.36)	254 (10)	104 (4.09)	37 (1.46)
CSH300 (in)	291 (11.46	360 (14.17)	46 (1.81)	390 (15.35)	120 (4.72)	60 (2.36)	369 (14.53)	104 (4.09)	37 (1.46)

CSH120, CSH200 and CSH300 Core balance CTs

⚠ ⚠ DANGER

HAZARD OF ELECTRIC SHOCK, ELECTRIC ARC OR BURNS

- Only qualified personnel should install this equipment. Such work should be performed only after reading this entire set of instructions and checking the technical characteristics of the device.
- NEVER work alone.
- Turn off all power supplying this equipment before working on or inside it. Consider all sources of power, including the possibility of backfeeding.
- Always use a properly rated voltage sensing device to confirm that all power is off.
- Only CSH120, CSH200 or CSH300 core balance CTs can be used for direct residual current measurement. Other residual current sensors require the use of an intermediate device, CSH30, ACE990 or CCA634.
- Install the core balance CTs on insulated cables.
- Cables with a rated voltage of more than 1000 V must also have an earthed shielding.

Failure to follow these instructions will result in death or serious injury.

NOTICE

HAZARD OF NON-OPERATION

Do not connect the secondary circuit of the CSH core balance CTs to earth.
This connection is made in Sepam.

Failure to follow these instructions can result in equipment damage.

Assembly

Group the MV cable (or cables) in the middle of the core balance CT.
Use non-conductive binding to hold the cables.
Remember to insert the 3 medium voltage cable shielding earthing cables through the core balance.

DE51678

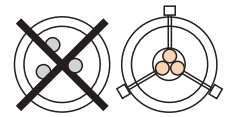

E40465



Assembly on MV cables.

E40466

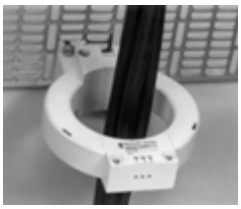

Assembly on mounting plate.

Connection

Connection to Sepam series 20 and Sepam series 40

To residual current I0 input, on connector (A), terminals 19 and 18 (shielding).

Connection to Easergy Sepam series 60

To residual current I0 input, on connector (E), terminals 15 and 14 (shielding).

Connection to Easergy Sepam series 80

- To residual current I0 input, on connector (E), terminals 15 and 14 (shielding)
- To residual current I'0 input, on connector (E), terminals 18 and 17 (shielding).

Recommended cable

- Sheathed cable, shielded by tinned copper braid
- Minimum cable cross-section 0.93 mm² (AWG 18)
- Resistance per unit length < 100 mΩ/m (30.5 mΩ/ft)
- Minimum dielectric strength: 1000 V (700 Vrms)
- Connect the cable shielding in the shortest manner possible to Sepam
- Flatten the connection cable against the metal frames of the cubicle.

The connection cable shielding is grounded in Sepam. Do not ground the cable by any other means.
The maximum resistance of the Sepam connection wiring must not exceed 4 Ω (i.e. 20 m maximum for 100 mΩ/m or 66 ft maximum for 30.5 mΩ/ft).

DE80231

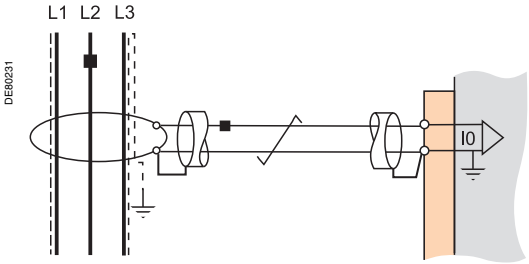

DE80206

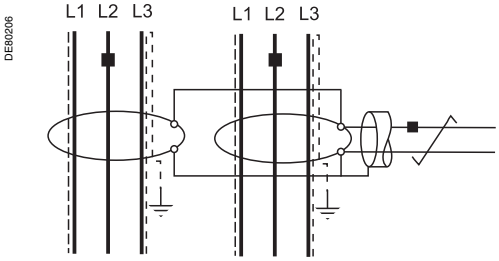

Connecting 2 CSH200 CTs in parallel

It is possible to connect 2 CSH200 CTs in parallel if the cables will not fit through a single CT, by following the instructions below:

- Fit one CT per set of cables.
- Make sure the wiring polarity is correct.

The maximum permissible current at the primary is limited to 6 kA - 1 s for all cables.

CSH30 interposing ring CT

E40468



Vertical assembly of CSH30 interposing ring CT.

E44717

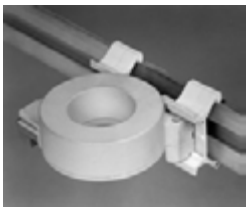

Horizontal assembly of CSH30 interposing ring CT.

Function

The CSH30 interposing ring CT is used as an interface when the residual current is measured using 1 A or 5 A current transformers.

Characteristics

Weight	0.12 kg (0.265 lb)
Assembly	On symmetrical DIN rail In vertical or horizontal position

Dimensions

DE80023

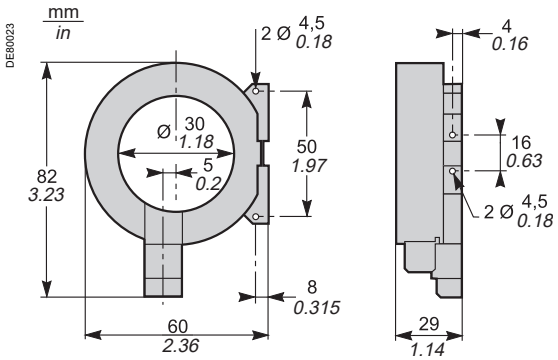

6

CSH30 interposing ring CT

Connection

The CSH30 is adapted for the type of current transformer, 1 A or 5 A, by the number of turns of the secondary wiring through the CSH30 interposing ring CT:
- 5 A rating - 4 turns
- 1 A rating - 2 turns

Connection to 5 A secondary circuit

PE50033

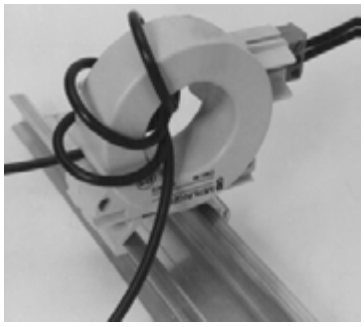

1. Plug into the connector.
2. Insert the transformer secondary wire through the CSH30 interposing ring CT 4 times.

Connection to 1 A secondary circuit

PE50034

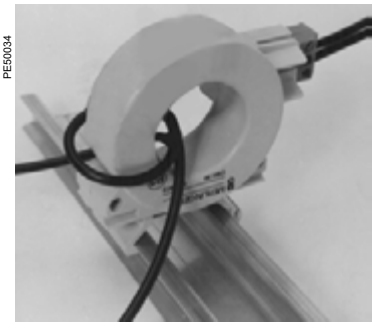

1. Plug into the connector.
2. Insert the transformer secondary wire through the CSH30 interposing ring CT twice.

DE80125

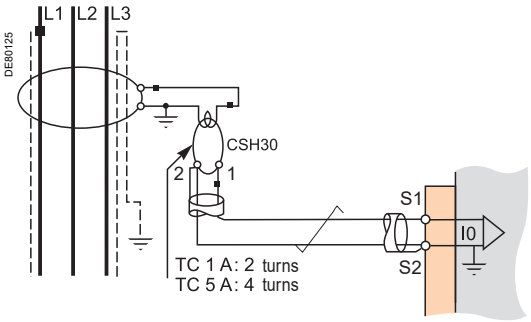

DE80126

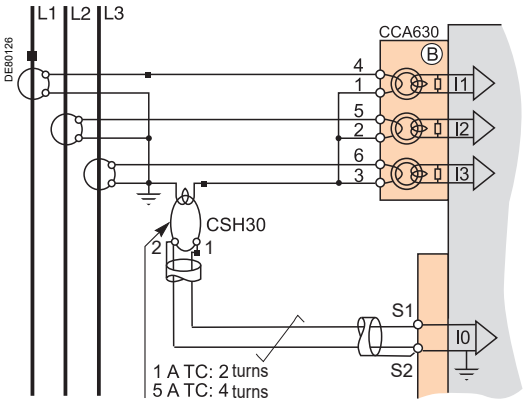

Connection to Sepam series 20 and Sepam series 40
To residual current I0 input, on connector (A), terminals 19 and 18 (shielding).

Connection to Easergy Sepam series 60
To residual current I0 input, on connector (E) terminals 15 and 14 (shielding).

Connection to Easergy Sepam series 80
- To residual current I0 input, on connector (E), terminals 15 and 14 (shielding)
- To residual current I'0 input, on connector (E), terminals 18 and 17 (shielding).

Recommended cable
- Sheathed cable, shielded by tinned copper braid
- Minimum cable cross-section 0.93 mm² (AWG 18) (max. 2.5 mm², AWG 12)
- Resistance per unit length < 100 mΩ/m (30.5 mΩ/ft)
- Minimum dielectric strength: 1000 V (700 Vrms)
- Maximum length: 2 m (6.6 ft).

It is essential for the CSH30 interposing ring CT to be installed near Sepam (Sepam - CSH30 link less than 2 m (6.6 ft) long).
Flatten the connection cable against the metal frames of the cubicle.
The connection cable shielding is grounded in Sepam. Do not ground the cable by any other means.

ACE990 Core balance CT interface

PE80318



ACE990 core balance CT interface.

Function

The ACE990 is used to adapt measurements between an MV core balance CT with a ratio of 1/n (50 ⩽ n ⩽ 1500), and the Sepam residual current input.

Note: *You must use an interface ACE990 with a core balance CT other than a CSH120, CSH200 or CSH300 , even if this core balance CT has the same transformation ratio than a CSH120,CSH200 or CSH300.*

Characteristics

Weight	0.64 kg (1.41 lb)
Assembly	Mounted on symmetrical DIN rail
Amplitude accuracy	±1%
Phase accuracy	< 2°
Maximum permissible current	20 kA - 1 s (on the primary winding of an MV core balance CT with a ratio of 1/50 that does not saturate)
Operating temperature	-25°C to +70°C (-13°F to +158°F)
Storage temperature	-25°C to +70°C (-13°F to +158°F)

Description and dimensions

(E) ACE990 input terminal block, for connection of the core balance CT.
(S) ACE990 output terminal block, for connection of the Sepam residual current.

DE81196

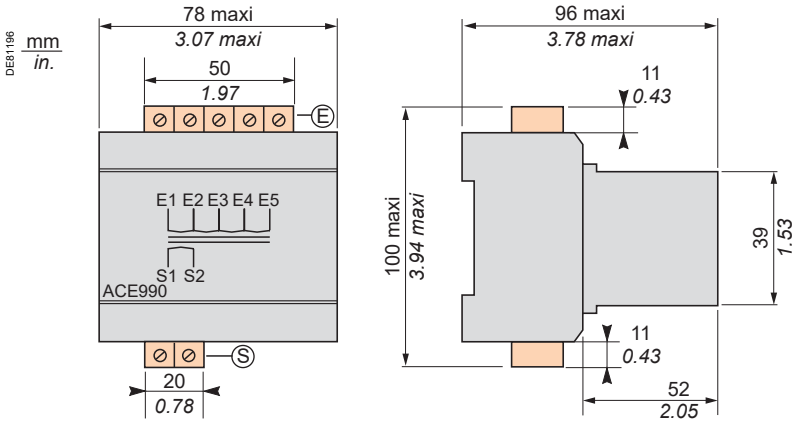

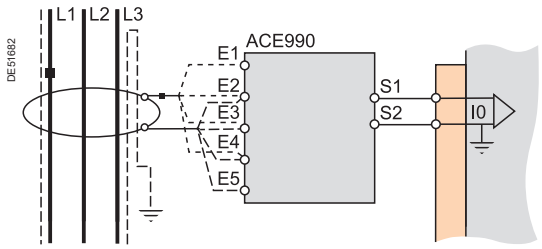

Connection

Connection of core balance CT

Only one core balance CT can be connected to the ACE990 interface.
The secondary circuit of the MV core balance CT is connected to 2 of the 5 ACE990 interface input terminals. To define the 2 input terminals, it is necessary to know the following:

- Core balance CT ratio (1/n)
- Core balance CT power
- Close approximation of rated current In0

(In0 is a general setting in Sepam and defines the earth fault protection setting range between 0.1 In0 and 15 In0).

The table below can be used to determine:

- The 2 ACE990 input terminals to be connected to the MV core balance CT secondary
- The type of residual current sensor to set
- The exact value of the rated residual current In0 setting, given by the following formula: **In0 = k x number of core balance CT turns**

with k the factor defined in the table below.

The core balance CT must be connected to the interface in the right direction for correct operation: the MV core balance CT secondary output terminal S1 must be connected to the terminal with the lowest index (Ex).

K value	ACE990 input terminals to be connected	Residual current sensor setting	Min. MV core balance CT power
0.00578	E1 - E5	ACE990 - range 1	0.1 VA
0.00676	E2 - E5	ACE990 - range 1	0.1 VA
0.00885	E1 - E4	ACE990 - range 1	0.1 VA
0.00909	E3 - E5	ACE990 - range 1	0.1 VA
0.01136	**E2 - E4**	**ACE990 - range 1**	**0.1 VA**
0.01587	E1 - E3	ACE990 - range 1	0.1 VA
0.01667	E4 - E5	ACE990 - range 1	0.1 VA
0.02000	E3 - E4	ACE990 - range 1	0.1 VA
0.02632	E2 - E3	ACE990 - range 1	0.1 VA
0.04000	E1 - E2	ACE990 - range 1	0.2 VA
0.05780	E1 - E5	ACE990 - range 2	2.5 VA
0.06757	E2 - E5	ACE990 - range 2	2.5 VA
0.08850	E1 - E4	ACE990 - range 2	3.0 VA
0.09091	E3 - E5	ACE990 - range 2	3.0 VA
0.11364	E2 - E4	ACE990 - range 2	3.0 VA
0.15873	E1 - E3	ACE990 - range 2	4.5 VA
0.16667	E4 - E5	ACE990 - range 2	4.5 VA
0.20000	E3 - E4	ACE990 - range 2	5.5 VA
0.26316	E2 - E3	ACE990 - range 2	7.5 VA

Example:
Given a core balance CT with a ratio of 1/400 2 VA, used within a measurement range of 0.5 A to 60 A.
How should it be connected to Sepam via the ACE990?

1. *Choose a close approximation of the rated current In0, i.e. 5 A.*
2. *Calculate the ratio: approx. In0/number of turns = 5/400 = 0.0125.*
3. *Find the closest value of k in the table opposite to k = 0.01136.*
4. *Check the mininum power required for the core balance CT: 2 VA core balance CT > 0.1 VA V OK.*
5. *Connect the core balance CT secondary to ACE990 input terminals E2 and E4.*
6. *Set Sepam up with: In0 = 0.01136 x 400 = 4.544 A. Select the closest value rounded to a single decimal (example: 4.544 A rounded to 4.5 A)*

This value of In0 can be used to monitor current between 0.45 A and 67.5 A.

Wiring of MV core balance CT secondary circuit:

- *MV core balance CT S1 output to ACE990 E2 input terminal*
- *MV core balance CT S2 output to ACE990 E4 input terminal.*

Connection to Sepam series 20 and Sepam series 40

To residual current I0 input, on connector (A), terminals 19 and 18 (shielding).

Connection to Easergy Sepam series 60

To residual current I0 input, on connector (E), terminals 15 and 14 (shielding).

Connection to Easergy Sepam series 80

- To residual current I0 input, on connector (E), terminals 15 and 14 (shielding)
- To residual current I'0 input, on connector (E), terminals 18 and 17 (shielding).

Recommended cables

- Cable between core balance CT and ACE990: less than 50 m (160 ft) long
- Sheathed cable, shielded by tinned copper braid between the ACE990 and Sepam, maximum length 2 m (6.6 ft)
- Cable cross-section between 0.93 mm² (AWG 18) and 2.5 mm² (AWG 12)
- Resistance per unit length less than 100 mΩ/m (30.5 mΩ/ft)
- Minimum dielectric strength: 100 Vrms.

Connect the connection cable shielding in the shortest manner possible (2 cm or 5.08 in maximum) to the shielding terminal on the Sepam connector.
Flatten the connection cable against the metal frames of the cubicle.
The connection cable shielding is grounded in Sepam. Do not ground the cable by any other means.

Voltage transformers



VRQ3 without fuses.



VRQ3 with fuses.

⚠ ⚠ DANGER

HAZARD OF ELECTRIC SHOCK, ELECTRIC ARC OR BURNS

- Only qualified personnel should install this equipment. Such work should be performed only after reading this entire set of instructions and checking the technical characteristics of the device.
- NEVER work alone.
- Turn off all power supplying this equipment before working on or inside it. Consider all sources of power, including the possibility of backfeeding.
- Always use a properly rated voltage sensing device to confirm that all power is off.
- Start by connecting the device to the protective earth and to the functional earth.
- Screw tight all terminals, even those not in use.

Failure to follow these instructions will result in death or serious injury.

Function

Sepam may be connected to any standard voltage transformer with a rated secondary voltage of 100 V to 220 V.
Schneider Electric offers a range of voltage transformers

- to measure phase-to-neutral voltages: voltage transformers with one insulated MV terminal
- to measure phase-to-phase voltages: voltage transformers with two insulated MV terminals
- with or without integrated protection fuses.

Consult us for more information.

Connection

All Easergy Sepam series 60 units have 4 voltage inputs to measure the 3 phase voltages and the residual voltage.

- The voltage measurement VTs are connected to the Sepam connector (E).
- 4 transformers integrated in the Sepam base unit provide the required impedance matching and isolation between the VTs and the Sepam input circuits.

6

MES120, MES120G, MES120H 14 input / 6 output modules
Presentation

PE50020



MES120 14 input / 6 output module.

Function

The extension of the output relays included on the Easergy Sepam series 60 and Easergy Sepam series 80 base unit is done by the add of MES120 modules:
- On Easergy Sepam series 60, it is possible to add 2 MES120 modules (H1 and H2 connectors).
- On Easergy Sepam series 80, it is possible to add 3 MES120 modules (H1, H2 and H3 connectors).

A MES120 module is composed of:
- 14 logical inputs
- 6 relays outputs included 1 control relays input and 5 signalisation relays outputs.

Three modules are available for the different input supply voltage ranges and offer different switching thresholds:
- MES120, 14 inputs 24 V DC to 250 V DC with a typical switching threshold of 14 V DC
- MES120G, 14 inputs 220 V DC to 250 V DC with a typical switching threshold of 155 V DC.
- MES120H, 14 inputs 110 V DC to 125 V DC with a typical switching threshold of 82 V DC

Characteristics

MES120/MES120G/MES120H modules						
Weight		0.38 kg (0.83 lb)				
Operating temperature		-25°C to +70°C (-13°F to +158°F)				
Environmental characteristics		Same characteristics as Sepam base units				
Logic inputs		**MES120**	**MES120G**		**MES120H**	
Voltage		24 to 250 V DC	220 to 250 V DC		110 to 125 V DC	
Range		19.2 to 275 V DC	170 to 275 V DC		88 to 150 V DC	
Typical consumption		3 mA	3 mA		3 mA	
Typical switching threshold		14 V DC	155 V DC		82 V DC	
Input limit voltage	At state 0	< 6 V DC	< 144 V DC		< 75 V DC	
	At state 1	> 19 V DC	> 170 V DC		> 88 V DC	
Isolation of inputs from other isolated groups		Enhanced	Enhanced		Enhanced	
Control relay output Ox01						
Voltage	DC	24/48 V DC	127 V DC	220 V DC	250 V DC	-
	AC (47.5 to 63 Hz)	-	-	-	-	100 to 240 V AC
Continuous current		8 A	8 A	8 A	8 A	8 A
Breaking capacity	Resistive load	8/4 A	0.7 A	0.3 A	0.2 A	8 A
	L/R load < 20 ms	6/2 A	0.5 A	0.2 A	-	-
	L/R load < 40 ms	4/1 A	0.2 A	0.1 A	-	-
	p.f. load > 0.3	-	-	-	-	5 A
Making capacity		< 15 A for 200 ms				
Isolation of outputs from other isolated groups		Enhanced				
Annunciation relay output Ox02 to Ox06						
Voltage	DC	24/48 V DC	127 V DC	220 V DC	250 V DC	-
	AC (47.5 to 63 Hz)	-	-	-	-	100 to 240 V AC
Continuous current		2 A	2 A	2 A	2 A	2 A
Breaking capacity	Resistive load	2/1 A	0.6 A	0.3 A	0.2 A	-
	L/R load < 20 ms	2/1 A	0.5 A	0.15 A	-	-
	p.f. load > 0.3	-	-	-	-	1 A
Isolation of outputs from other isolated groups		Enhanced				

MES120, MES120G, MES120H 14 input / 6 output modules
Installation

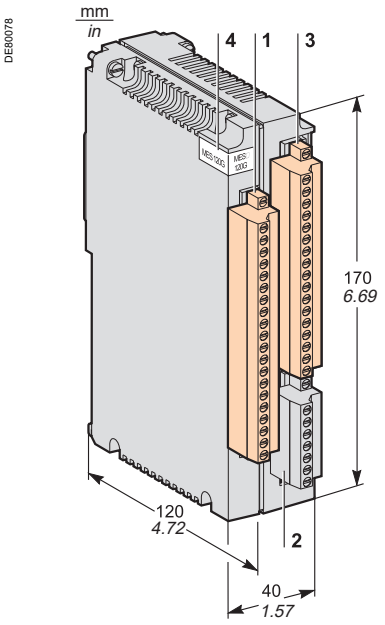

Description

3 lockable screw-type, removable, connectors.

1 20-pin connector for 9 logic inputs:
- Ix01 to Ix04: 4 independent logic inputs
- Ix05 to Ix09: 5 common point logic inputs.

2 7-pin connector for 5 common point logic inputs Ix10 to Ix14.

3 17-pin connector for 6 relay outputs:
- Ox01: 1 control relay output
- Ox02 to Ox06: 5 annunciation relay outputs.

Addressing of MES120 module inputs/outputs:
- x = 1 for the module connected to H1
- x = 2 for the module connected to H2
- x = 3 for the module connected to H3 (Easergy Sepam series 80 only).

4 MES120G, MES120H identification label (MES120 modules have no labels).

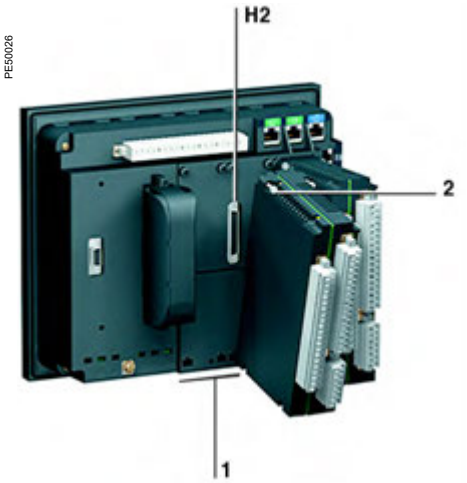

Installation of the second MES120 module, connected to base unit connector H2.

Assembly

Installation of an MES120 module on the base unit
- insert the 2 pins on the MES module into the slots **1** on the base unit
- push the module flat up against the base unit to plug it into the connector **H2**
- partially tighten the two mounting screws **2** before locking them.

MES120 modules must be mounted in the following order:
- if only one module is required, connect it to connector **H1**
- if 2 modules are required, connect them to connectors **H1** and **H2** (maximum configuration of Easergy Sepam series 60).
- if 3 modules are required, they have to be connected to the **H1**, **H2** and **H3** connectors (maximum configuration of Easergy Sepam series 80).

MES120, MES120G, MES120H
14 input / 6 output modules
Installation

Connection

The inputs are potential-free and the DC power supply source is external.

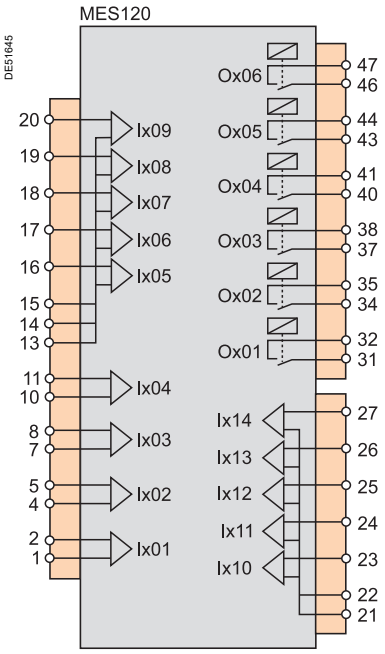

⚠ ⚠ DANGER

HAZARD OF ELECTRIC SHOCK, ELECTRIC ARC OR BURNS

- Only qualified personnel should install this equipment. Such work should be performed only after reading this entire set of instructions and checking the technical characteristics of the device.
- NEVER work alone.
- Turn off all power supplying this equipment before working on or inside it. Consider all sources of power, including the possibility of backfeeding.
- Always use a properly rated voltage sensing device to confirm that all power is off.
- Screw tight all terminals, even those not in use.

Failure to follow these instructions will result in death or serious injury.

Wiring of connectors

- wiring without fittings:
  - 1 wire with maximum cross-section 0.2 to 2.5 mm² (≥ AWG 24-12) or 2 wires with maximum cross-section 0.2 to 1 mm² (≥ AWG 24-16)
  - stripped length: 8 to 10 mm (0.31 to 0.39 in)
- wiring with fittings:
  - recommended wiring with Schneider Electric fittings:
    - DZ5CE015D for one 1.5 mm² wire (AWG 16)
    - DZ5CE025D for one 2.5 mm² wire (AWG 12)
    - AZ5DE010D for two 1 mm² wires (AWG 18)
  - tube length: 8.2 mm (0.32 in)
  - stripped length: 8 mm (0.31 in).

Optional remote modules
Selection guide

4 remote modules are proposed as options to enhance the Sepam base unit functions:
- the number and type of remote modules compatible with the base unit depend on the Sepam application
- the DSM303 remote advanced UMI module is only compatible with base units that do not have integrated advanced UMIs.
- the DSM303 advanced UMI module and the MCS025 synchro-check module must not be connected to Easergy Sepam series 60 at the same time.

			Sepam series 20		Sepam series 40		Easergy Sepam series 60			Easergy Sepam series 80		
			S2x, B2x	T2x, M2x	S4x	T4x, M4x, G4x	S6x	T6x, G6x	M6x, C6x	S8x, B8x	T8x, G8x	M8x C8x
MET148-2	Temperature sensor module	See page 376	0	1	0	2	0	2	2	0	2	2
MSA141	Analog output module	See page 378	1	1	1	1	1	1	1	1	1	1
DSM303	Remote advanced UMI module	See page 380	1	1	1	1	1	1	1	1	1	1
MCS025	Synchro-check module	See page 382	0	0	0	0	1	1	0	1	1	0
Number of sets of interlinked modules/maximum number of remote modules			1 set of 3 interlinked modules		1 set of 3 interlinked modules		1 set of 3 interlinked modules			5 modules split between 2 sets of interlinked modules		

Optional remote modules
Connection

NOTICE

HAZARD OF NON-OPERATION

The MCS025 module must ALWAYS be connected with the special CCA785 prefabricated cord, supplied with the module and equipped with an orange RJ45 connector and a black RJ45 connector.

Failure to follow these instructions can result in equipment damage.

Connection cords

Different combinations of modules can be connected using cords fitted with 2 black RJ45 connectors, which come in 3 lengths:

- CCA770: length = 0.6 m (2 ft)
- CCA772: length = 2 m (6.6 ft)
- CCA774: length = 4 m (13.1 ft).

The modules are linked by cords which provide the power supply and act as functional links with the Sepam unit (connector (D) to connector (Da), (Dd) to (Da), …).

Rules on inter-module linking

- linking of 3 modules maximum
- DSM303 and MCS025 modules can only be connected at the end of the link.

Maximum recommended configurations

Sepam series 20, Sepam series 40 and Easergy Sepam series 60: only 1 set of interlinked modules

Base	Cord	Module 1	Cord	Module 2	Cord	Module 3
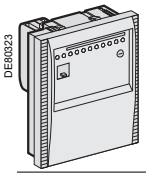						
series 20/40/60	CCA772	MSA141	CCA770	MET148-2	CCA774	DSM303
series 40/60	CCA772	MSA141	CCA770	MET148-2	CCA772	MET148-2
series 40/60	CCA772	MET148-2	CCA770	MET148-2	CCA774	DSM303
series 60	CCA772	MSA141	CCA770	MET148-2	CCA785	MCS025
series 60	CCA772	MET148-2	CCA770	MET148-2	CCA785	MCS025

Easergy Sepam series 80: 2 sets of interlinked modules

Easergy Sepam series 80 has 2 connection ports for remote modules, (D1) and (D2). Modules may be connected to either port.

Base	Cord	Module 1	Cord	Module 2	Cord	Module 3
Set 1 (D1)	CCA772	MET148-2	CCA770	MET148-2	CCA774	DSM303
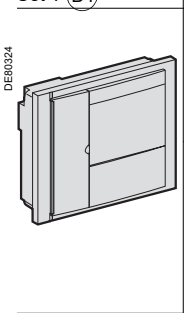						
Set 2 (D2)	CCA772	MSA141	CCA785	MCS025	-	-

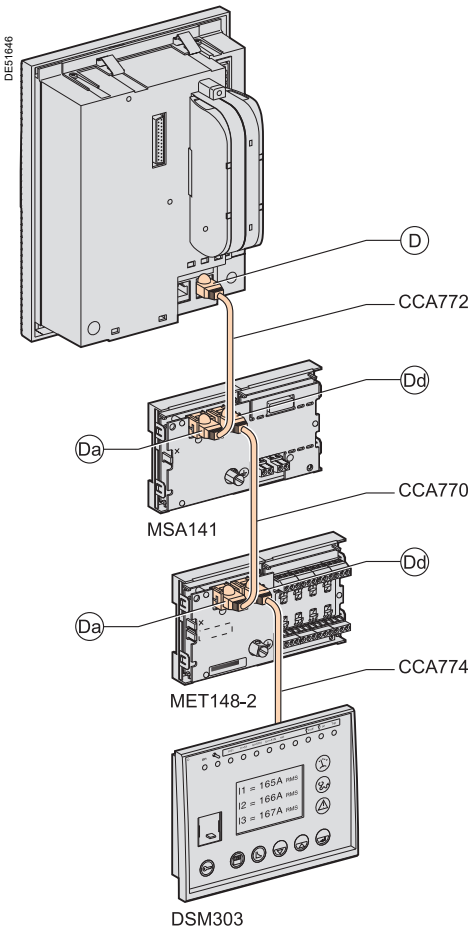

Example of inter-module linking on Sepam series 20.

MET148-2
Temperature sensor module


PE50021

Function

The MET148-2 module can be used to connect 8 temperature sensors (RTDs) of the same type:
- Pt100, Ni100 or Ni120 type RTDs, according to parameter setting
- 3-wire temperature sensors
- A single module for each Sepam series 20 base unit, to be connected by one of the CCA770 (0.6 or 2 ft), CCA772 (2 m or 6.6 ft) or CCA774 (4 m or 13.1 ft) cords
- 2 modules for each Sepam series 40, Easergy Sepam series 60 or series 80 base unit, to be connected by CCA770 (0.6 or 2 ft), CCA772 (2 m or 6.6 ft) or CCA774 (4 m or 13.1 ft) cords

The temperature measurement (e.g. in a transformer or motor winding) is utilized by the following protection functions:
- Thermal overload (to take ambient temperature into account)
- Temperature monitoring.

Characteristics

MET148-2 module		
Weight	0.2 kg (0.441 lb)	
Assembly	On symmetrical DIN rail	
Operating temperature	-25°C to +70°C (-13°F to +158°F)	
Environmental characteristics	Same characteristics as Sepam base units	
Temperature sensors	**Pt100**	**Ni100/Ni120**
Isolation from earth	None	None
Current injected in RTD	4 mA	4 mA

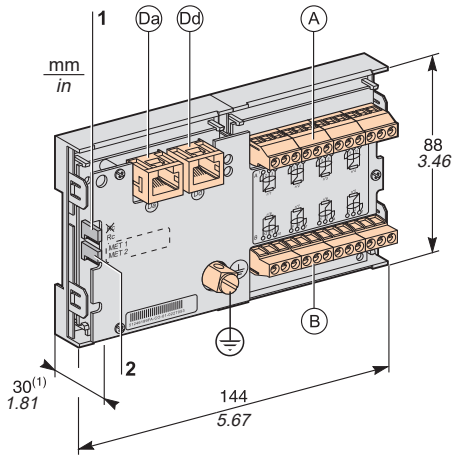

(1) *70 mm (2.8 in) with CCA77x cord connected.*

Description and dimensions

(A) Terminal block for RTDs 1 to 4
(B) Terminal block for RTDs 5 to 8
(Da) RJ45 connector to connect the module to the base unit with a CCA77x cord
(Dd) RJ45 connector to link up the next remote module with a CCA77x cord (according to application)
(⏚) Grounding/earthing terminal

1 Jumper for impedance matching with load resistor (Rc), to be set to:
- ~~Rc~~, if the module is not the last interlinked module (default position)
- Rc, if the module is the last interlinked module.

2 Jumper used to select module number, to be set to:
- MET1: 1st MET148-2 module, to measure temperatures T1 to T8 (default position)
- MET2: 2nd MET148-2 module, to measure temperatures T9 to T16 (for Sepam series 40, Easergy Sepam series 60 and series 80 only).

MET148-2
Temperature sensor module

Connection

⚠ ⚠ DANGER

HAZARD OF ELECTRIC SHOCK, ELECTRIC ARC OR BURNS

- Only qualified personnel should install this equipment. Such work should be performed only after reading this entire set of instructions and checking the technical characteristics of the device.
- NEVER work alone.
- Check that the temperature sensors are isolated from dangerous voltages.

Failure to follow these instructions will result in death or serious injury.

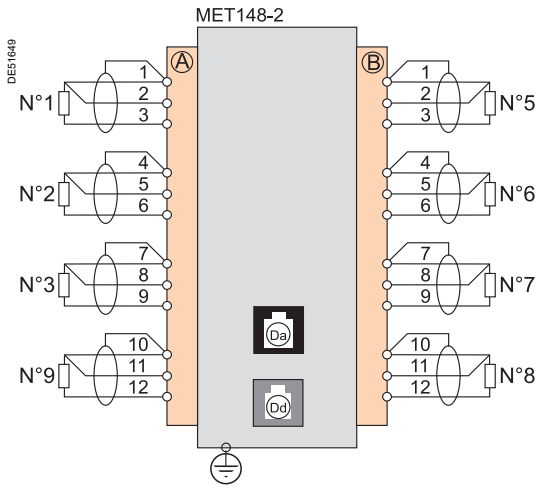

Connection of the earthing terminal

By tinned copper braid with cross-section ⩾ 6 mm² (AWG 10) or cable with cross-section ⩾ 2.5 mm² (AWG 12) and length ⩽ 200 mm (7.9 in), fitted with a 4 mm (0.16 in) ring lug.

Check the tightness (maximum tightening torque 2.2 Nm or 19.5 lb-in).

Connection of RTDs to screw-type connectors

- 1 wire with cross-section 0.2 to 2.5 mm² (AWG 24-12)
- or 2 wires with cross-section 0.2 to 1 mm² (AWG 24-18)

Recommended cross-sections according to distance:

- Up to 100 m (330 ft) ⩾ 1 mm² (AWG 18)
- Up to 300 m (990 ft) ⩾ 1.5 mm² (AWG 16)
- Up to 1 km (0.62 mi) ⩾ 2.5 mm² (AWG 12)

Maximum distance between sensor and module: 1 km (0.62 mi)

Wiring precautions

- It is preferable to use shielded cables

The use of unshielded cables can cause measurement errors which vary in degree according to the level of surrounding electromagnetic disturbance

- Only connect the shielding at the MET148-2 end, in the shortest manner possible, to the corresponding terminals of connectors Ⓐ and Ⓑ
- Do not connect the shielding at the RTD end.

Accuracy derating according to wiring

The error Δt is proportional to the length of the cable and inversely proportional to the cable cross-section:

$$\Delta t(^{\circ}C) = 2 \times \frac{L(km)}{S(mm^2)}$$

- ±2.1°C/km for 0.93 mm² cross-section (AWG 18)
- ±1°C/km for 1.92 mm² cross-section (AWG 14).

6

MSA141 Analog output module

PE80748



MSA141 analog output module.

Function

The MSA141 module converts one of the Sepam measurements into an analog signal:

- Selection of the measurement to be converted by parameter setting
- 0-1 mA, 0-10 mA, 4-20 mA, 0-20 mA analog signal according to parameter setting
- Scaling of the analog signal by setting minimum and maximum values of the converted measurement.

Example: the setting used to have phase current 1 as a 0-10 mA analog output with a dynamic range of 0 to 300 A is:

- minimum value = 0
- maximum value = 3000

- A single module for each Sepam base unit, to be connected by one of the CCA770 (0.6m or 2 ft), CCA772 (2m or 6.6 ft) or CCA774 (4m or 13.1 ft) cords.

The analog output can also be remotely managed via the communication network.

Characteristics

MSA141 module				
Weight	0.2 kg (0.441 lb)			
Assembly	On symmetrical DIN rail			
Operating temperature	-25°C to +70°C (-13°F to +158°F)			
Environmental characteristics	Same characteristics as Sepam base units			
Analog output				
Current	4 -20 mA, 0-20 mA, 0-10 mA, 0-1 mA			
Scaling (no data input checking)	Minimum value			
	Maximum value			
Load impedance	< 600 Ω (including wiring)			
Accuracy	0.5% full scale or 0,01 mA			
Measurements available	**Unit**	**Series 20**	**Series 40**	**Series 60/ Series 80**
Phase and residual currents	0.1 A	■	■	■
Phase-to-neutral and phase-to-phase voltages	1 V	■	■	■
Frequency	0.01 Hz	■	■	■
Thermal capacity used	1%	■	■	■
Temperatures	1°C (1°F)	■	■	■
Active power	0.1 kW		■	■
Reactive power	0.1 kvar		■	■
Apparent power	0.1 kVA		■	■
Power factor	0.01			■
Remote setting via communication link		■	■	■

6

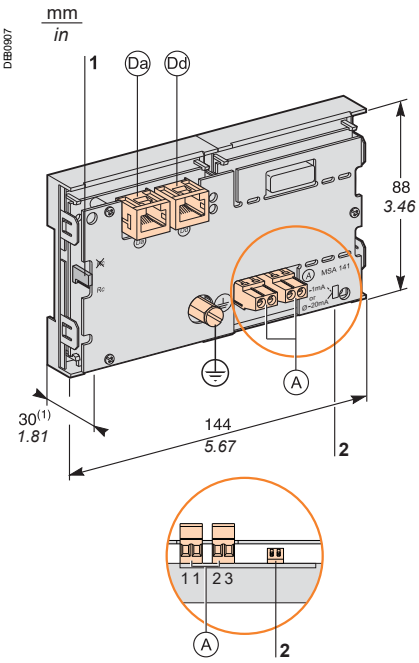

(1) *70 mm (2.8 in) with CCA77x cord connected.*

Description and dimensions

A Terminal block for analog output

Da RJ45 socket to connect the module to the base unit with a CCA77x cord

Dd RJ45 socket to link up the next remote module with a CCA77x cord (according to application)

⏚ Earthing terminal

1 Jumper for impedance matching with load resistor (Rc), to be set to:
- ~~Rc~~, if the module is not the last interlinked module (default position)
- Rc, if the module is the last interlinked module.

2 Micro-switches to set the analog output type:

Micro-switches	Position	Output type
 1 2	low (default position)	0-20 mA
		4-20 mA
		0-10 mA
 1 2	high	0-1 mA

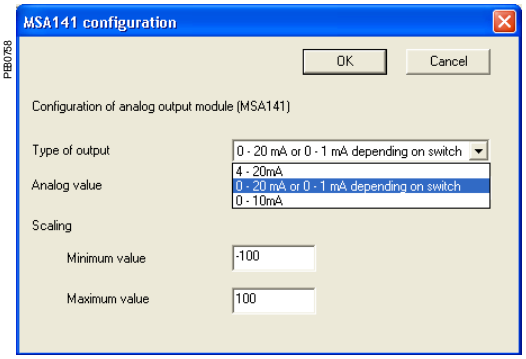

Analog output module (MSA141) setting window.

Output Setting

The analog output type is configured in 2 steps:
1. Hardware setting: set the 2 micro-switches:
- on low position for a 0-20 mA, 4-20 mA or 0-10 mA output type
- on high position for a 0-1 mA output type.

2. Software configuration: select the desired output type in the SFT2841 setting software **Analog output module (MSA141) setting** window and validate by pressing the **OK** button.

Note : *The 0-1 mA output works only if the* ***0-20 mA or 0-1 mA depending on switch*** *output type has been set in the SFT2841 setting software (step 2).*

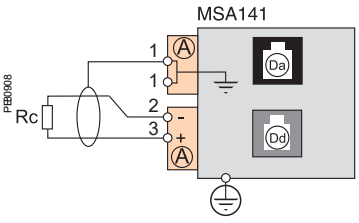

Connection

Connection of the earthing terminal
By tinned copper braid with cross-section ⩾ 6 mm² (AWG 10) or cable with cross-section ⩾ 2.5 mm² (AWG 12) and length ⩽ 200 mm (7.9 in), equipped with a 4 mm (0.16 in) ring lug.
Check the tightness (maximum tightening torque 2.2 Nm or 19.5 lb-in).

Connection of analog output to screw-type connector
- 1 wire with cross-section 0.2 to 2.5 mm² (AWG 24-12)
- or 2 wires with cross-section 0.2 to 1 mm² (AWG 24-18).

Wiring precautions
- It is preferable to use shielded cables
- Use tinned copper braid to connect the shielding at least at the MSA141 end.

DSM303
Remote advanced UMI module

PE50127



DSM303 remote advanced UMI module.

Function

When associated with a Sepam that does not have its own advanced user-machine interface, the DSM303 offers all the functions available on a Sepam integrated advanced UMI.
It can be installed on the front panel of the cubicle in the most suitable operating location:

- Reduced depth < 30 mm (1.2 in)
- A single module for each Sepam, to be connected by one of the CCA772 (2 m or 6.6 ft) or CCA774 (4 m or 13.1 ft) cords.

The module cannot be connected to Sepam units with integrated advanced UMIs.

Characteristics

DSM303 module	
Weight	0.3 kg (0.661 lb)
Assembly	Flush-mounted
Operating temperature	-25°C to +70°C (-13°F to +158°F)
Environmental characteristics	Same characteristics as Sepam base units

DSM303
Remote advanced UMI module

Description and dimensions

The module is simply flush-mounted and secured by its clips. No additional screw-type fastening is required.

Front view

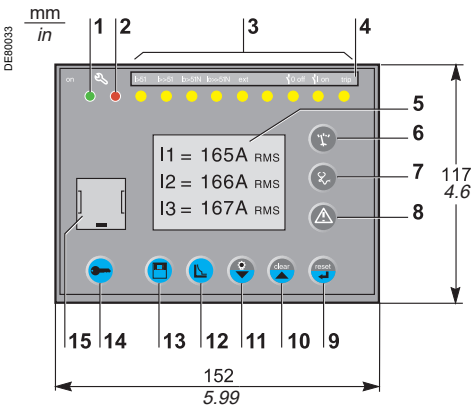

Side view

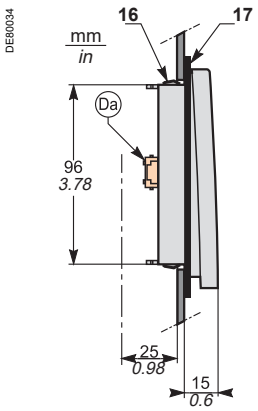

1 Green LED: Sepam on
2 Red LED:
- steadily on: module unavailable
- flashing: Sepam link unavailable

3 9 yellow LEDs
4 Label identifying the LEDs
5 Graphic LCD screen
6 Display of measurements
7 Display of switchgear, network and machine diagnosis data
8 Display of alarm messages
9 Sepam reset (or confirm data entry)
10 Alarm acknowledgment and clearing (or move cursor up)
11 LED test (or move cursor down)
12 Access to protection settings
13 Access to Sepam parameters
14 Entry of 2 passwords
15 PC connection port
16 Mounting clip
17 Gasket to ensure NEMA 12 tightness
(gasket supplied with the DSM303 module, to be installed if necessary)

(Da) RJ45 lateral output connector to connect the module to the base unit with a CCA77x cord.

Cut-out for flush-mounting (mounting plate thickness < 3 mm or 0.12 in)

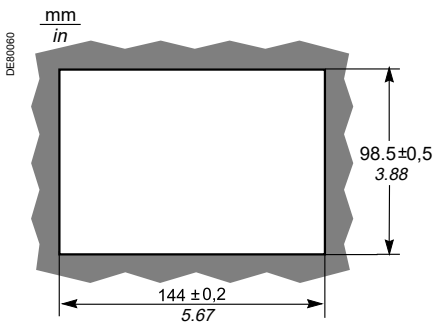

⚠ CAUTION

HAZARD OF CUTS
Trim the edges of the cut-out plates to remove any jagged edges.

Failure to follow these instructions can result in injury.

Connection

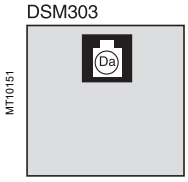

(Da) RJ45 socket to connector the module to the base unit with a CCA77x cord.

The DSM303 module is always the last interlinked remote module and it systematically ensures impedance matching by load resistor (Rc).

MCS025
Synchro-check module

PE50285



MCS025 synchro-check module.

Function

The MCS025 module is used with Easergy Sepam series 60 and series 80.
The MCS025 module checks the voltages upstream and downstream of a circuit breaker to ensure safe closing (ANSI 25).
It checks the differences in amplitude, frequency and phase between the two measured voltages, taking into account voltage abscence.
Three relay outputs may be used to send the close enable to several Sepam units. The circuit-breaker control function of each Sepam unit will take this close enable into account.

The settings for the synchro-check function and the measurements carried out by the module may be accessed by the SFT2841 setting and operating software, similar to the other settings and measurements for the Sepam.

The MCS025 module is supplied ready for operation with:
- the CCA620 connector for connection of the relay outputs and the power supply
- the CCT640 connector for voltage connection
- the CCA785 cord for connection between the module and the Sepam base unit.

Characteristics

MCS025 module					
Weight		1.35 kg (2.98 lb)			
Assembly		With the AMT840 accessory			
Operating temperature		-25°C to +70°C (-13°F to +158°F)			
Environmental characteristics		Same characteristics as Sepam base units			
Voltage inputs					
Input impedance		> 100 kΩ			
Consumption		< 0.015 VA (VT 100 V)			
Continuous thermal withstand		240 V			
1-second overload		480 V			
Relay outputs					
Relay outputs O1 and O2					
Voltage	DC	24/48 V DC	127 V DC	220 V DC	
	AC (47.5 to 63 Hz)				100 to 240 V AC
Continuous current		8 A	8 A	8 A	8 A
Breaking capacity	Resistive load	8 A / 4 A	0.7 A	0.3 A	
	Load L/R < 20 ms	6 A / 2 A	0.5 A	0.2 A	
	Load L/R < 40 ms	4 A / 1 A	0.2 A	0.1 A	
	Resistive load				8 A
	Load p.f. > 0.3				5 A
Making capacity		< 15 ms for 200 ms			
Isolation of outputs from other isolated groups		Enhanced			
Relay outputs O3 and O4 (O4 not used)					
Voltage	DC	24 / 48 V DC	127 V DC	220 V DC	
	AC (47.5 to 63 Hz)				100 to 240 V AC
Continuous current		2 A	2 A	2 A	2 A
Breaking capacity	Load L/R < 20 ms	2 A / 1 A	0.5 A	0.15 A	
	Load p.f. > 0.3				5 A
Isolation of outputs from other isolated groups		Enhanced			
Power supply					
Voltage		24 to 250 V DC, -20 % / +10 %		110 to 240 V AC, -20 % / +10 % 47.5 to 63 Hz	
Maximum consumption		6 W		9 VA	
Inrush current		< 10 A for 10 ms		< 15 A for one half period	
Acceptable momentary outages		10 ms		10 ms	

MCS025
Synchro-check module

Description

1 MCS025 module

(A) CCA620 20-pin connector for:
- ■ auxiliary power supply
- ■ 4 relay outputs:
- □ O1, O2, O3: close enable.
- □ O4: not used

(B) CCT640 connector (phase-to-neutral or phase-to-phase) for the two input voltages to be synchronized

(C) RJ45 connector, not used

(D) RJ45 connector for module connection to the Sepam base unit, either directly or via another remote module.

2 Two mounting clips

3 Two holding pins for the flush-mount position

4 CCA785 connection cord

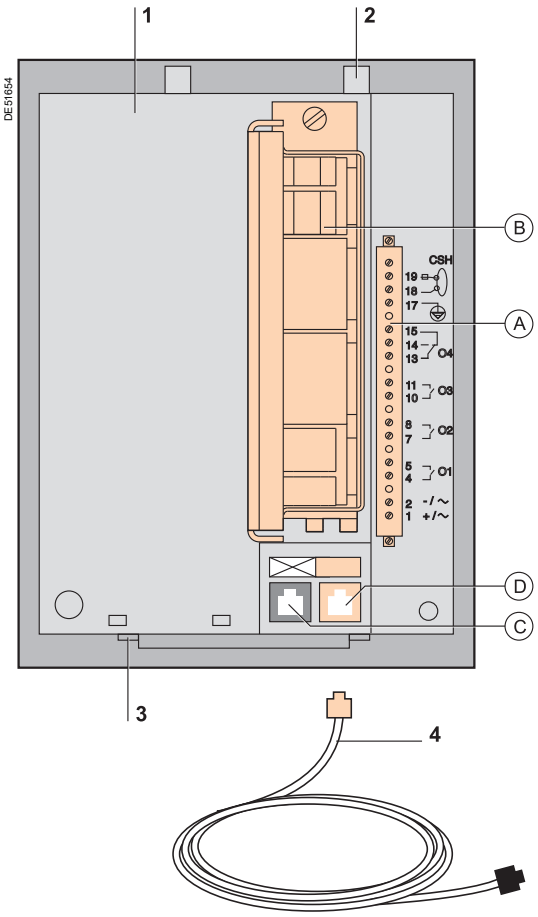

MCS025
Synchro-check module

Dimensions

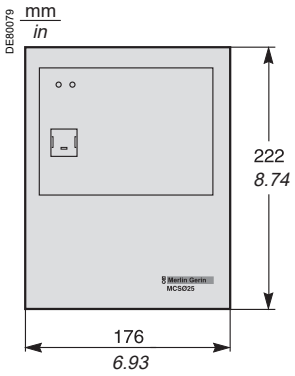

MCS025.

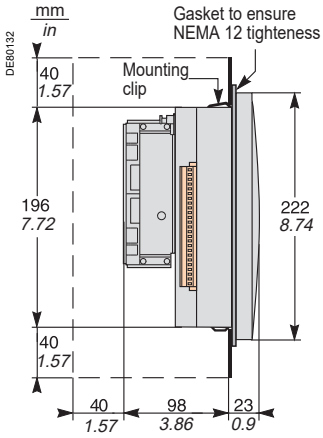

Assembly with AMT840 mounting plate

The MCS025 module should be mounted at the back of the compartment using the AMT840 mounting plate.

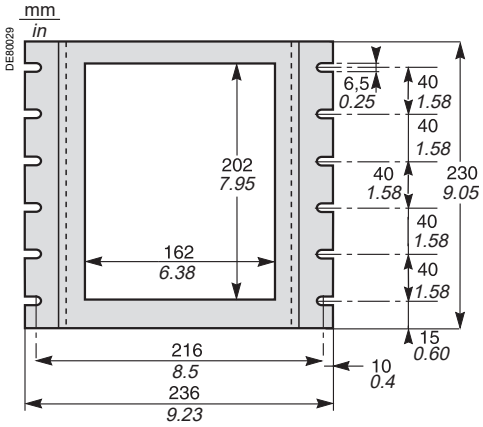

AMT840 mounting plate.

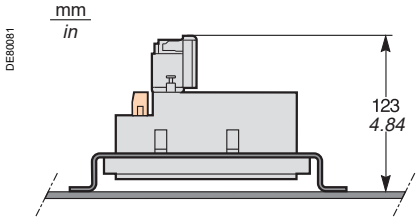

Connection characteristics

Connector	Type	Reference	Wiring
(A)	Screw-type	CCA620	■ wiring with no fittings: □ 1 wire with maximum cross-section 0.2 to 2.5 mm² (> AWG 24-12) or 2 wires with cross-section 0.2 to 1 mm² (>AWG 24-16) □ stripped length: 8 to 10 mm (0.31 to 0.39 in) ■ wiring with fittings: □ recommended wiring with Schneider Electric fittings: - DZ5CE015D for 1 wire 1.5 mm² (AWG 16) - DZ5CE025D for 1 wire 2.5 mm² (AWG 12) - AZ5DE010D for 2 x 1 mm² wires (AWG 18) □ tube length: 8.2 mm (0.32 in) □ stripped length: 8 mm (0.32 in)
(B)	Screw-type	CCT640	VT wiring: same as wiring of the CCA620 Earthing connection: by 4 mm (0.15 mm) ring lug
(D)	Orange RJ45 connector		CCA785, special prefabricated cord supplied with the MCS025 module: ■ orange RJ45 connector for connection to port (D) on the MCS025 module ■ black RJ45 connector for connection to the Sepam base unit, either directly or via another remote module.

MCS025
Synchro-check module

Connection diagram

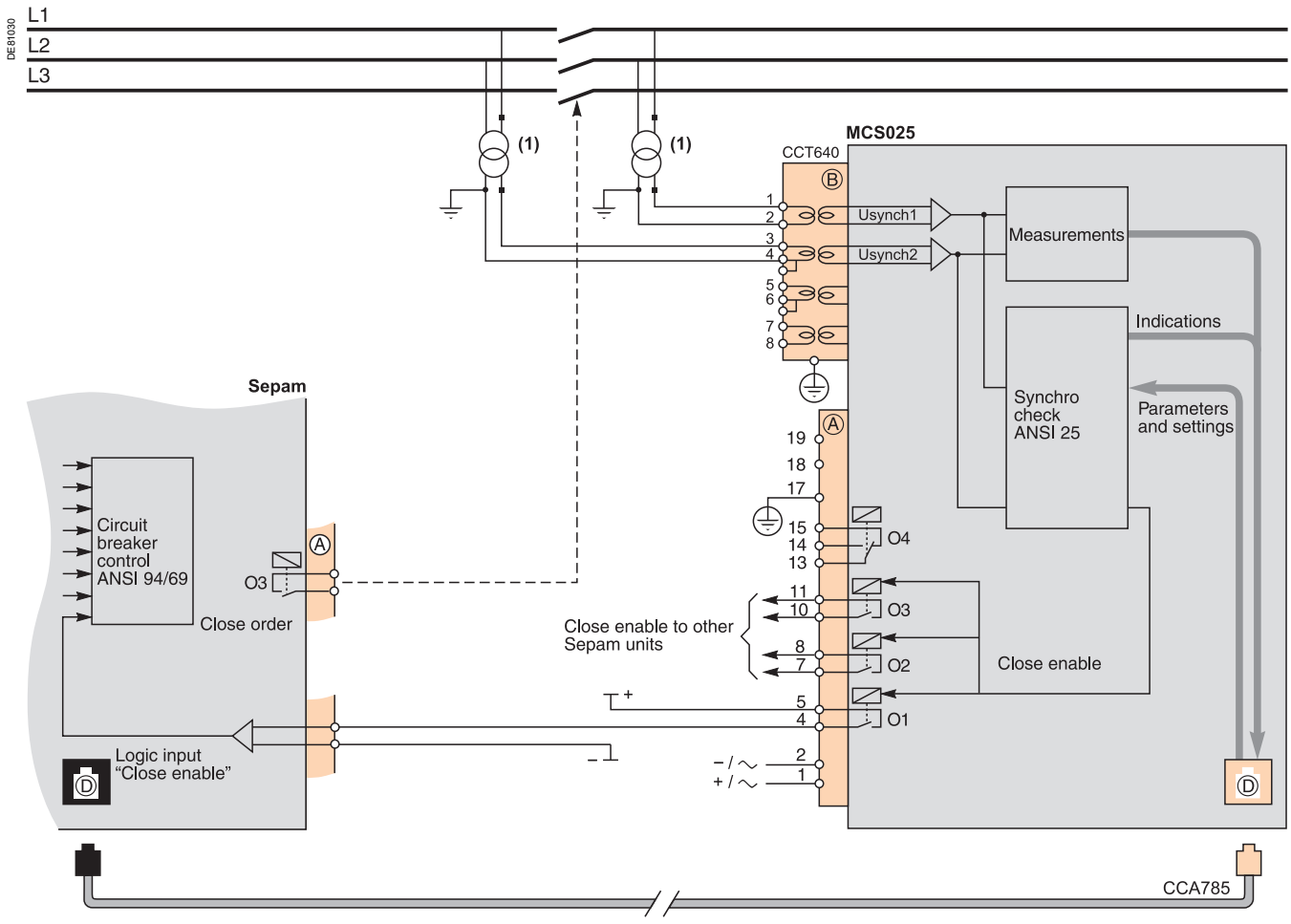

(1) *Phase-to-phase or phase-to-neutral connection.*

NOTICE

HAZARD OF NON-OPERATION

The MCS025 module must ALWAYS be connected with the special CCA785 cord, supplied with the module and equipped with an orange RJ45 plug and a black RJ45 plug.

Failure to follow these instructions can result in equipment damage.

⚠ ⚠ DANGER

HAZARD OF ELECTRIC SHOCK, ELECTRIC ARC OR BURNS

- Only qualified personnel should install this equipment. Such work should be performed only after reading this entire set of instructions and checking the technical characteristics of the device.
- NEVER work alone.
- Check that the temperature sensors are isolated from dangerous voltages.
- Always use a properly rated voltage sensing device to confirm that all power is off.
- Start by connecting the device to the protective earth and to the functional earth.
- Terminal 17 (PE) on connector (A) of the MCS025 module and the functional earth terminal on the Sepam unit must be connected locally to the cubicle grounding circuit.

The two connection points should be as close as possible to one another.

- Screw tight all terminals, even those not in use.

Failure to follow these instructions will result in death or serious injury.

Communication accessory selection guide

There are 2 types of Sepam communication accessory:
■ Communication interfaces, which are essential for connecting Sepam to the communication network
■ Converters and other accessories, as options, which are used for complete implementation of the communication network.

Communication-interface selection guide

		ACE949-2	ACE959	ACE937	ACE969TP-2		ACE969FO-2		ACE850TP	ACE850FO
Type of Sepam										
Sepam series 20		■	■	■	■	■	■	■		
Sepam series 40/60/80		■	■	■	■	■	■	■	■	■
Type of network										
		S-LAN or E-LAN (1)	S-LAN or E-LAN (1)	S-LAN or E-LAN (1)	S-LAN	E-LAN	S-LAN	E-LAN	S-LAN and E-LAN	S-LAN and E-LAN
Protocol										
Modbus RTU		■	■	■	■ (3)	■	■ (3)	■		
DNP3					■ (3)		■ (3)			
IEC 60870-5-103					■ (3)		■ (3)			
Modbus TCP/IP									■	■
IEC 61850									■	■
Physical interface										
RS 485	2-wire	■			■	■		■		
	4-wire		■							
Fiber optic ST	Star			■			■			
	Ring						■ (2)			
10/100 base Tx	2 ports								■	
100 base Fx	2 ports									■
Power supply										
DC		Supplied by Sepam	Supplied by Sepam	Supplied by Sepam	24 to 250 V		24 to 250 V		24 to 250 V	24 to 250 V
AC					110 to 240 V		110 to 240 V		110 to 240 V	110 to 240 V
See details on page		**page 389**	**page 390**	**page 391**	**page 392**		**page 392**		**page 398**	**page 398**

(1) *Only one connection possible, S-LAN or E-LAN.*
(2) *Use of Echo mode is mandatory, see manual SEPED303002, SEPED305001 or SEPED305002.*
(3) *Not supported simultaneously (1 protocol per application).*

Converter selection guide

	ACE909-2	ACE919CA	ACE919CC	EGX100	EGX300	ECI850
To supervisor						
Physical interface	1 RS 232 port	1 port 2-wire RS 485	1 port 2-wire RS 485	1 Ethernet port 10/100 base T	1 Ethernet port 10/100 base T	1 Ethernet port 10/100 base T
Modbus RTU	■ (1)	■ (1)	■ (1)			
IEC 60870-5-103	■ (1)	■ (1)	■ (1)			
DNP3	■ (1)	■ (1)	■ (1)			
Modbus TCP/IP				■	■	
IEC 61850						■
To Sepam						
Physical interface	1 port 2-wire RS 485	1 port 2-wire RS 485	1 port 2-wire RS 485	1 port RS 485 2-wire or 4-wire	1 port RS 485 2-wire or 4-wire	1 port RS 485 2-wire or 4-wire
RS 485 distributed power supply	■	■	■			
Modbus RTU	■ (1)	■ (1)	■ (1)	■	■	■
IEC 60870-5-103	■ (1)	■ (1)	■ (1)			
DNP3	■ (1)	■ (1)	■ (1)			
Power supply						
DC			24 to 48 V	24 V	24 V	24 V
AC	110 to 220 V	110 to 220 V				
See details on page	**page 405**	**page 406**	**page 406**	**See EGX100 manual**	**See EGX300 manual**	**page 408**

(1) *The supervisor protocol is the same as for Sepam.*

Note: *All these interfaces support the E-LAN protocol.*

Connection of communication interfaces
Connection cords

CCA612 connection cord

Function
The CCA612 prefabricated cord is used to connect ACE949-2, ACE959, ACE937, ACE969TP-2 and ACE969FO-2 communication interfaces:
- To the white communication port (C) on a Sepam series 20 or series 40 base unit
- To the white communication port (C1) on an Easergy Sepam series 60 base unit.
- To the white communication ports (C1) or (C2) on an Easergy Sepam series 80 base unit.

Characteristics
- Length = 3 m (9.8 ft)
- Fitted with 2 white RJ45 connectors.

Sepam series 20 and Sepam series 40

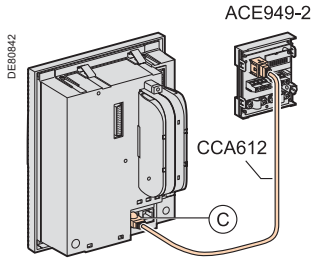

Easergy Sepam series 60

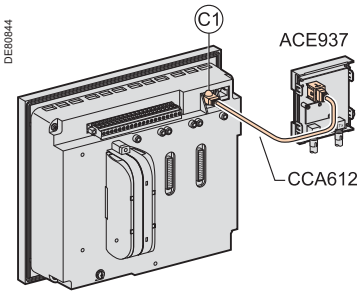

Easergy Sepam series 80

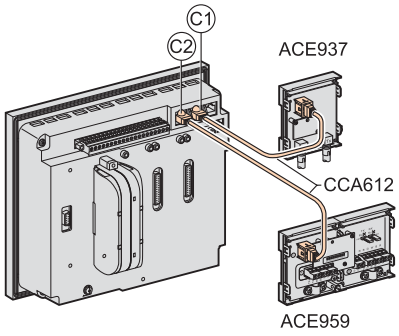

NOTICE

HAZARD OF DEFECTIVE COMMUNICATION

- Never use the (C2) and (F) communication ports on an Easergy Sepam series 80 simultaneously.
- The only communication ports on an Easergy Sepam series 80 unit that can be used simultaneously are ports (C1) and (C2) or ports (C1) and (F).

Failure to follow these instructions can result in equipment damage.

CCA614 connection cord

Function
The CCA614 prefabricated cord is used to connect ACE850TP and ACE850FO communication interfaces:
- To the white communication port (C) on a Sepam series 40 base unit
- To the blue communication port (F) on an Easergy Sepam series 60 or Sepam series 80 base unit.

Characteristics
- Length = 3 m (9.8 ft)
- Fitted with 2 blue RJ45 connectors
- Minimum curvature radius = 50 mm (1.97 in)

Sepam series 40

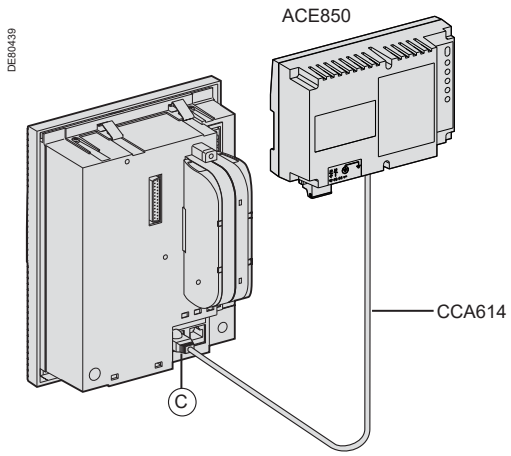

Easergy Sepam series 60 and Easergy Sepam series 80

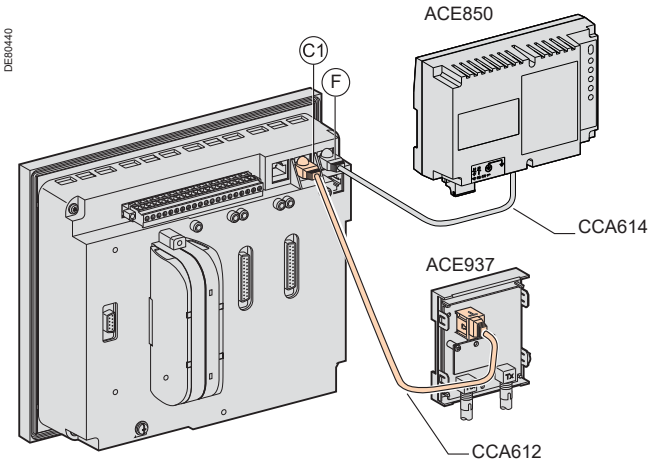

Connection of communication interfaces
Characteristics of communication networks

RS 485 network for ACE949-2, ACE959 and ACE969TP-2 interfaces

RS 485 network cable	2-wire	4-wire
RS 485 medium	1 shielded twisted pair	2 shielded twisted pairs
Distributed power supply	1 shielded twisted pair	1 shielded twisted pair
Shielding	Tinned copper braid, coverage > 65%	
Characteristic impedance	120 Ω	
Gauge	AWG 24	
Resistance per unit length	< 100 Ω/km (62.1 Ω/mi)	
Capacitance between conductors	< 60 pF/m (18.3 pF/ft)	
Capacitance between conductor and shielding	< 100 pF/m (30.5 pF/ft)	
Maximum length	1300 m (4270 ft)	

Fiber-optic network for ACE937 and ACE969FO-2 interfaces

Fiber-optic communication port				
Fiber type	Graded-index multimode silica			
Wavelength	820 nm (invisible infra-red)			
Type of connector	ST (BFOC bayonet fiber optic connector)			
Fiber optic diameter (µm)	**Numerical aperture (NA)**	**Maximum attenuation (dBm/km)**	**Minimum optical power available (dBm)**	**Maximum fiber length**
50/125	0.2	2.7	5.6	700 m (2300 ft)
62.5/125	0.275	3.2	9.4	1800 m (5900 ft)
100/140	0.3	4	14.9	2800 m (9200 ft)
200 (HCS)	0.37	6	19.2	2600 m (8500 ft)

Fiber-optic Ethernet network for the ACE850FO communication interface

Fiber-optic communication port					
Fiber type	Multimode				
Wavelength	1300 nm				
Type of connector	SC				
Fiber optic diameter (µm)	**TX minimum optical power (dBm)**	**TX maximum optical power (dBm)**	**RX sensitivity (dBm)**	**RX saturation (dBm)**	**Maximum distance**
50/125	-22.5	-14	-33.9	-14	2 km (1.24 mi)
62.5/125	-19	-14	-33.9	-14	2 km (1.24 mi)

Wired Ethernet network for the ACE850TP communication interface

Wired communication port			
Connector type	**Data**	**Medium**	**Maximum distance**
RJ45	10/100 Mbps	Cat 5 STP or FTP or SFTP	100 m (328 ft)

ACE949-2
2-wire RS 485 network interface

PE80321



ACE949-2 2-wire RS 485 network connection interface.

Function

The ACE949-2 interface performs 2 functions:
- Electrical interface between Sepam and a 2-wire RS 485 communication network
- Main network cable branching box for the connection of a Sepam with a CCA612 cord.

Characteristics

ACE949-2 module	
Weight	0.1 kg (0.22 lb)
Assembly	On symmetrical DIN rail
Operating temperature	-25°C to +70°C (-13°F to +158°F)
Environmental characteristics	Same characteristics as Sepam base units
2-wire RS 485 electrical interface	
Standard	EIA 2-wire RS 485 differential
Distributed power supply	External, 12 V DC or 24 V DC ±10%
Power consumption	16 mA in receiving mode
	40 mA maximum in sending mode

Maximum length of 2-wire RS 485 network with standard cable

Number of Sepam units	Maximum length with 12 V DC power supply	Maximum length with 24 V DC power supply
5	320 m (1000 ft)	1000 m (3300 ft)
10	180 m (590 ft)	750 m (2500 ft)
20	160 m (520 ft)	450 m (1500 ft)
25	125 m (410 ft)	375 m (1200 ft)

DE80035

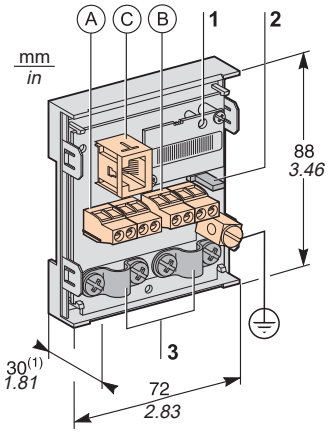

(1) *70 mm (2.8 in) with CCA612 cord connected.*

DE80127

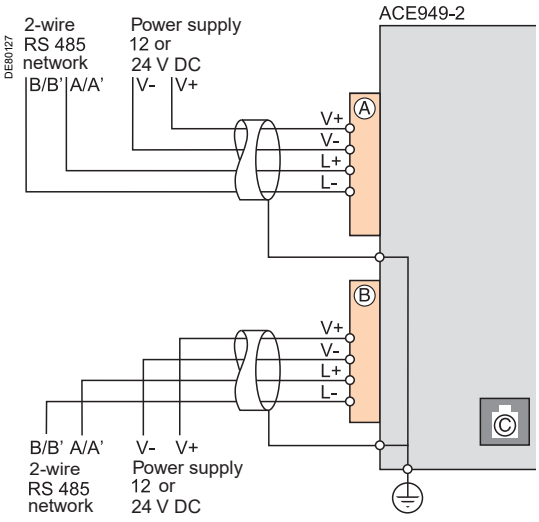

Description and dimensions

(A) and (B) Terminal blocks for network cable

(C) RJ45 socket to connect the interface to the base unit with a CCA612 cord

(⏚) Grounding/earthing terminal

1 Link activity LED, flashes when communication is active (sending or receiving in progress).

2 Jumper for RS 485 network line-end impedance matching with load resistor (Rc = 150 Ω), to be set to:
- ~~Rc~~, if the module is not at one end of the network (default position)
- Rc, if the module is at one end of the network.

3 Network cable clamps
(inner diameter of clamp = 6 mm or 0.24 in).

Connection

- Connection of network cable to screw-type terminal blocks (A) and (B)
- Connection of the earthing terminal by tinned copper braid with cross-section ⩾ 6 mm² (AWG 10) or cable with cross-section ⩾ 2.5 mm² (AWG 12) and length ⩽ 200 mm (7.9 in), fitted with a 4 mm (0.16 in) ring lug.
Check the tightness (maximum tightening torque 2.2 Nm or 19.5 lb-in).
- The interfaces are fitted with clamps to hold the network cable and recover shielding at the incoming and outgoing points of the network cable:
  - ☐ the network cable must be stripped
  - ☐ the cable shielding braid must be around and in contact with the clamp
- The interface is to be connected to connector (C) on the base unit using a CCA612 cord (length = 3 m or 9.8 ft, white fittings)
- The interfaces are to be supplied with 12 V DC or 24 V DC.

ACE959
4-wire RS 485 network interface



ACE959 4-wire RS 485 network connection interface.

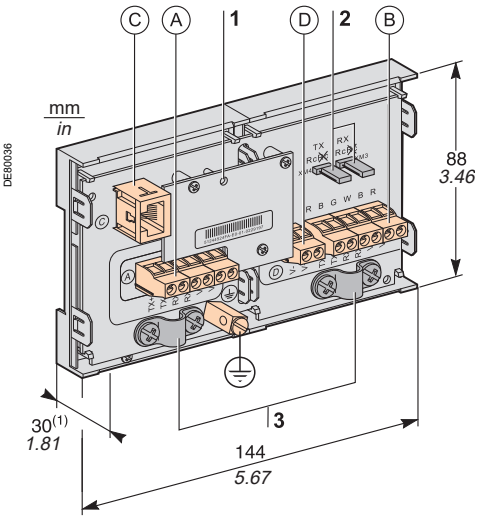

***(1)** 70 mm (2.8 in) with CCA612 cord connected.*

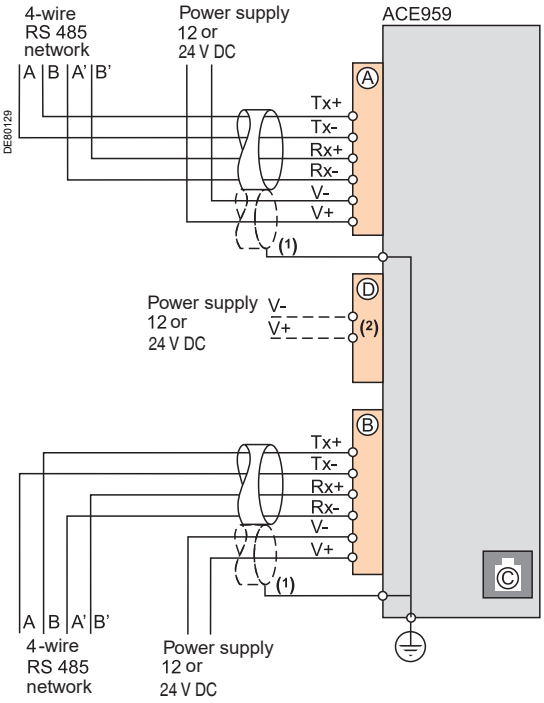

***(1)** Distributed power supply with separate wiring or included in the shielded cable (3 pairs).*
***(2)** Terminal block for connection of the distributed power supply module.*

Function

The ACE959 interface performs 2 functions:
- Electrical interface between Sepam and a 4-wire RS 485 communication network
- Main network cable branching box for the connection of a Sepam with a CCA612 cord.

Characteristics

ACE959 module	
Weight	0.2 kg (0.441 lb)
Assembly	On symmetrical DIN rail
Operating temperature	-25°C to +70°C (-13°F to +158°F)
Environmental characteristics	Same characteristics as Sepam base units

4-wire RS 485 electrical interface	
Standard	EIA 4-wire RS 485 differential
Distributed power supply	External, 12 V DC or 24 V DC ±10%
Power consumption	16 mA in receiving mode
	40 mA maximum in sending mode

Maximum length of 4-wire RS 485 network with standard cable

Number of Sepam units	Maximum length with 12 V DC power supply	Maximum length with 24 V DC power supply
5	320 m (1000 ft)	1000 m (3300 ft)
10	180 m (590 ft)	750 m (2500 ft)
20	160 m (520 ft)	450 m (1500 ft)
25	125 m (410 ft)	375 m (1200 ft)

Description and dimensions

(A) and (B) Terminal blocks for network cable
(C) RJ45 socket to connect the interface to the base unit with a CCA612 cord
(D) Terminal block for a separate auxiliary power supply (12 V DC or 24 V DC)
(t) Grounding/earthing terminal

1 Link activity LED, flashes when communication is active (sending or receiving in progress).
2 Jumper for 4-wire RS 485 network line-end impedance matching with load resistor (Rc = 150 Ω), to be set to:
- ~~Rc~~, if the module is not at one end of the network (default position)
- Rc, if the module is at one end of the network.

3 Network cable clamps
(inner diameter of clamp = 6 mm or 0.24 in).

Connection

- Connection of network cable to screw-type terminal blocks (A) and (B)
- Connection of the earthing terminal by tinned copper braid with cross-section ≥ 6 mm² (AWG 10) or cable with cross-section ≥ 2.5 mm² (AWG 12) and length ≤ 200 mm (7.9 in), fitted with a 4 mm (0.16 in) ring lug.
Check the tightness (maximum tightening torque 2.2 Nm or 19.5 lb-in).
- The interfaces are fitted with clamps to hold the network cable and recover shielding at the incoming and outgoing points of the network cable:
  - ☐ the network cable must be stripped
  - ☐ the cable shielding braid must be around and in contact with the clamp
- The interface is to be connected to connector (C) on the base unit using a CCA612 cord (length = 3 m or 9.8 ft, white fittings)
- The interfaces are to be supplied with 12 V DC or 24 V DC
- The ACE959 can be connected to a separate distributed power supply (not included in shielded cable). Terminal block (D) is used to connect the distributed power supply module.

ACE937 fiber optic interface

PE50024



ACE937 fiber optic connection interface.

Function

The ACE937 interface is used to connect Sepam to a fiber optic communication star system.
This remote module is connected to the Sepam base unit by a CCA612 cord.

Characteristics

ACE937 module	
Weight	0.1 kg (0.22 lb)
Assembly	On symmetrical DIN rail
Power supply	Supplied by Sepam
Operating temperature	-25°C to +70°C (-13°F to +158°F)
Environmental characteristics	Same characteristics as Sepam base units

Fiber optic interface				
Fiber type		Graded-index multimode silica		
Wavelength		820 nm (invisible infra-red)		
Type of connector		ST (BFOC bayonet fiber optic connector)		
Fiber optic diameter (µm)	**Numerical aperture (NA)**	**Maximum attenuation (dBm/km)**	**Minimum optical power available (dBm)**	**Maximum fiber length**
50/125	0.2	2.7	5.6	700 m (2300 ft)
62.5/125	0.275	3.2	9.4	1800 m (5900 ft)
100/140	0.3	4	14.9	2800 m (9200 ft)
200 (HCS)	0.37	6	19.2	2600 m (8500 ft)

Maximum length calculated with:
- Minimum optical power available
- Maximum fiber attenuation
- Losses in 2 ST connectors: 0.6 dBm
- Optical power margin: 3 dBm (according to IEC 60870 standard).

Example for a 62.5/125 µm fiber
Lmax = (9.4 - 3 - 0.6)/3.2 = 1.8 km (1.12 mi)

> **⚠ CAUTION**
>
> **HAZARD OF BLINDING**
> Never look directly into the end of the fiber optic.
>
> **Failure to follow these instructions can result in serious injury.**

DE80037

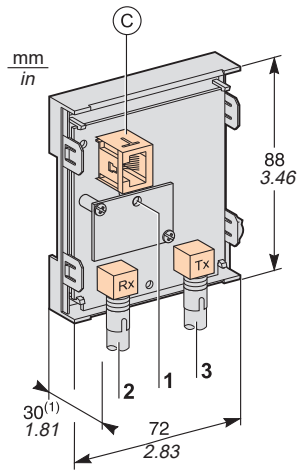

(1) *70 mm (2.8 in) with CCA612 cord connected.*

Description and dimensions

(C) RJ45 socket to connect the interface to the base unit with a CCA612 cord.

1 Link activity LED, flashes when communication is active (sending or receiving in progress).
2 Rx, female ST type connector (Sepam receiving).
3 Tx, female ST type connector (Sepam sending).

DE51666

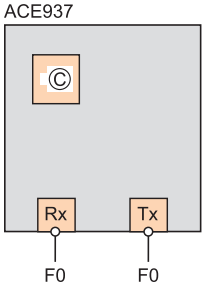

Connection

- The sending and receiving fiber optic fibers must be equipped with male ST type connectors
- Fiber optics screw-locked to Rx and Tx connectors.
- The interface is to be connected to connector (C) on the base unit using a CCA612 cord (length = 3 m or 9.8 ft, white fittings).

ACE969TP-2 and ACE969FO-2 Multi-protocol interfaces

PB103454



ACE969TP-2 communication interface.

PB103453



ACE969FO-2 communication interface.

Function

The ACE969 multi-protocol communication interfaces are for Sepam series 20, Sepam series 40, Easergy Sepam series 60 and Easergy Sepam series 80.
They have two communication ports to connect a Sepam to two independent communication networks:

■ The S-LAN (Supervisory Local Area Network) port is used to connect Sepam to a communication network dedicated to supervision, using one of the three following protocols:

□ IEC 60870-5-103
□ DNP3
□ Modbus RTU.

The communication protocol is selected at the time of Sepam parameter setting.

■ The E-LAN (Engineering Local Area Network) port, reserved for Sepam remote parameter setting and operation using the SFT2841 software.

There are two versions of the ACE969 interfaces, which are identical except for the S-LAN port:

■ ACE969TP-2 (Twisted Pair), for connection to an S-LAN network using a 2-wire RS 485 serial link

■ ACE969FO-2 (Fiber Optic), for connection to an S-LAN network using a fiber-optic connection (star or ring).

The E-LAN port is always a 2-wire RS 485 type port.

Compatible Sepam

The ACE969TP-2 and ACE969FO-2 multi-protocol interfaces are compatible with the following Sepam:

■ Sepam series 20 version ⩾ V0526
■ Sepam series 40 version ⩾ V3.00
■ Easergy Sepam series 60 all versions
■ Easergy Sepam series 80 base version and application version ⩾ V3.00.

6

ACE969TP-2 and ACE969FO-2 Multi-protocol interfaces

Characteristics

ACE969TP-2 and ACE969FO-2 module		
Technical characteristics		
Weight	0.285 kg (0.628 lb)	
Assembly	On symmetrical DIN rail	
Operating temperature	-25°C to +70°C (-13°F to +158°F)	
Environmental characteristics	Same characteristics as Sepam base units	
Power supply		
Voltage	24 to 250 V DC	110 to 240 V AC
Range	-20%/+10%	-20%/+10%
Maximum consumption	2 W	3 VA
Inrush current	< 10 A 100 µs	
Acceptable ripple content	12%	
Acceptable momentary outages	20 ms	

2-wire RS 485 communication ports	
Electrical interface	
Standard	EIA 2-wire RS 485 differential
Distributed power supply	ACE969-2 not required (built-in)

Fiber optic communication port				
Fiber optic interface				
Fiber type	Graded-index multimode silica			
Wavelength	820 nm (invisible infra-red)			
Type of connector	ST (BFOC bayonet fiber optic connector)			
Maximum length of fiber optic network				
Fiber diameter (µm)	**Numerical aperture (NA)**	**Attenuation (dBm/km)**	**Minimum optical power available (dBm)**	**Maximum fiber length**
50/125	0.2	2.7	5.6	700 m (2300 ft)
62.5/125	0.275	3.2	9.4	1800 m (5900 ft)
100/140	0.3	4	14.9	2800 m (9200 ft)
200 (HCS)	0.37	6	19.2	2600 m (8500 ft)

Maximum length calculated with:
- Minimum optical power available
- Maximum fiber attenuation
- Losses in 2 ST connectors: 0.6 dBm
- Optical power margin: 3 dBm (according to IEC 60870 standard).

Example for a 62.5/125 µm fiber
Lmax = (9.4 - 3 - 0.6)/3.2 = 1.8 km (1.12 mi).

Dimensions

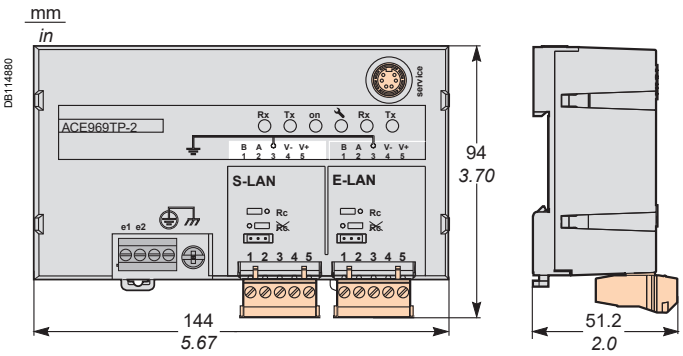

ACE969TP-2 and ACE969FO-2 Multi-protocol interfaces
Description

ACE969-2 communication interfaces

ACE969TP-2

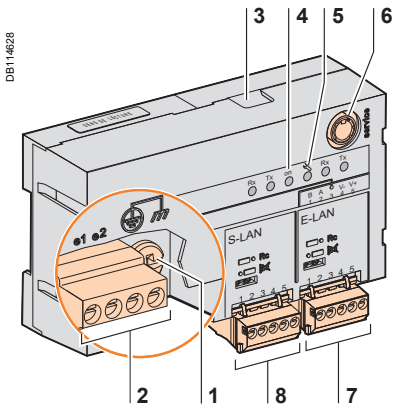

ACE969FO-2

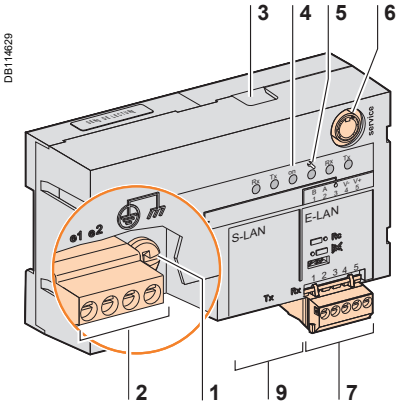

1 Grounding/earthing terminal using supplied braid
2 Power-supply terminal block
3 RJ45 socket to connect the interface to the base unit with a CCA612 cord
4 Green LED: ACE969-2 energized
5 Red LED: ACE969-2 interface status
- LED off = ACE969-2 set up and communication operational
- LED flashing = ACE969-2 not set up or setup incorrect
- LED remains on = ACE969-2 has faulted

6 Service connector: reserved for software upgrades
7 E-LAN 2-wire RS 485 communication port (ACE969TP-2 and ACE969FO-2)
8 S-LAN 2-wire RS 485 communication port (ACE969TP-2)
9 S-LAN fiber-optic communication port (ACE969FO-2).

2-wire RS 485 communication ports

S-LAN port (ACE969TP-2)

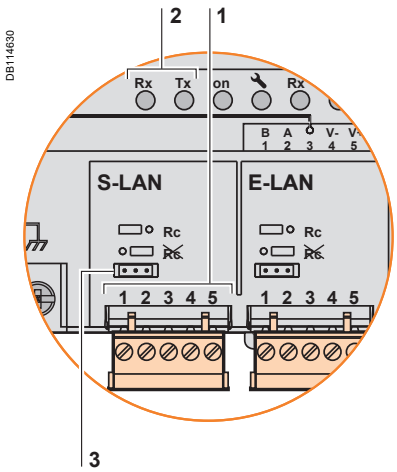

E-LAN port (ACE969TP-2 or ACE969FO-2)

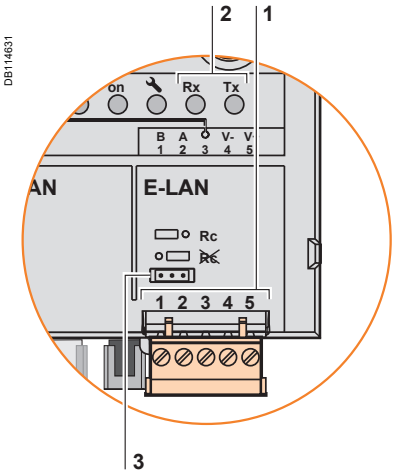

1 Draw-out terminal block, with two rows of connections to the RS 485 2-wire network:
- 2 black terminals: connection of RS 485 twisted-pair (2 wires)
- 2 green terminals: connection of twisted pair for distributed power supply

2 Indication LEDs:
- flashing Tx LED: Sepam sending
- flashing Rx LED: Sepam receiving

3 Jumper for RS 485 network line-end impedance matching with load resistor (Rc = 150 Ω), to be set to:
- ~~Rc~~, if the interface is not at the line end (default position)
- Rc, if the interface is at the line end.

Fiber optic communication port

S-LAN port (ACE969FO-2)

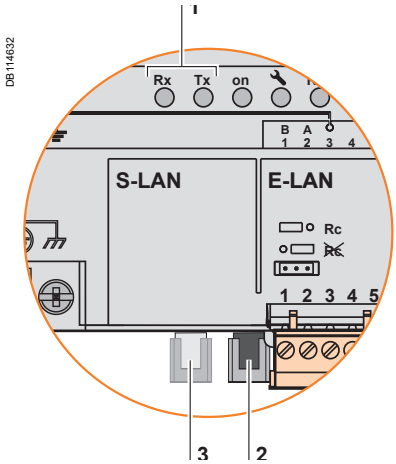

1 Indication LEDs:
- flashing Tx LED: Sepam sending
- flashing Rx LED: Sepam receiving

2 Rx, female ST-type connector (Sepam receiving)
3 Tx, female ST-type connector (Sepam sending).

ACE969TP-2 and ACE969FO-2 Multi-protocol interfaces
Connection

Power supply and Sepam

■ The ACE969-2 interface connects to connector C on the Sepam base unit using a CCA612 cord (length = 3 m or 9.84 ft, white RJ45 fittings)
■ The ACE969-2 interface must be supplied with 24 to 250 V DC or 110 to 240 V AC.

⚠ ⚠ DANGER

HAZARD OF ELECTRIC SHOCK, ELECTRIC ARC OR BURNS

■ Only qualified personnel should install this equipment. Such work should be performed only after reading this entire set of instructions and checking the technical characteristics of the device.
■ NEVER work alone.
■ Turn off all power supplying this equipment before working on or inside it. Consider all sources of power, including the possibility of backfeeding.
■ Always use a properly rated voltage sensing device to confirm that all power is off.
■ Start by connecting the device to the protective earth and to the functional earth.
■ Screw tight all terminals, even those not in use.

Failure to follow these instructions will result in death or serious injury.

DB114795

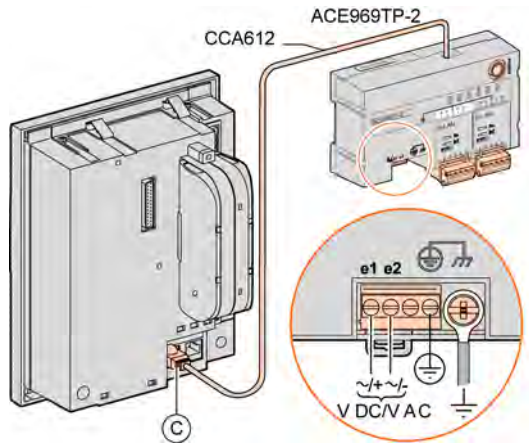

Terminals	Type	Wiring
e1-e2 - supply	Screw terminals	■ Wiring with no fittings: □ 1 wire with maximum cross-section 0.2 to 2.5 mm²(≥ AWG 24-12) or 2 wires with maximum cross-section 0.2 to 1 mm²(≥ AWG 24-18) □ stripped length: 8 to 10 mm (0.31 to 0.39 in) ■ Wiring with fittings: □ recommended wiring with Schneider Electric fitting: - DZ5CE015D for 1 wire 1.5 mm² (AWG 16) - DZ5CE025D for 1 wire 2.5 mm² (AWG 12) - AZ5DE010D for 2 wires 1 mm² (AWG 18) □ tube length: 8.2 mm (0.32 in) □ stripped length: 8 mm (0.31 in).
DE51962 Protective earth	Screw terminal	1 green/yellow wire, max. length 3 m (9.8 ft) and max. cross-section 2.5 mm² (AWG 12)
DE51845 Functional earth	4 mm (0.16 in) ring lug	Earthing braid, supplied for connection to cubicle grounding

6

ACE969TP-2 and ACE969FO-2 Multi-protocol interfaces
Connection

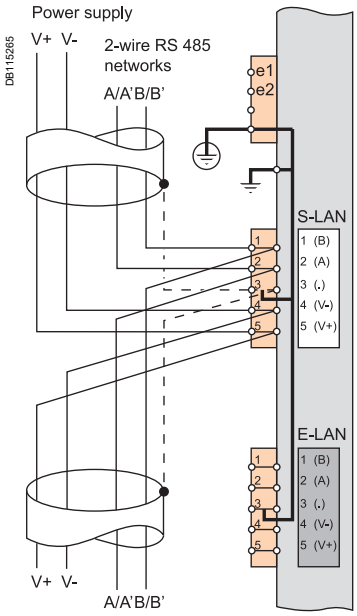

If ACE969TP and ACE969TP-2 are used together, the external power supply is required.

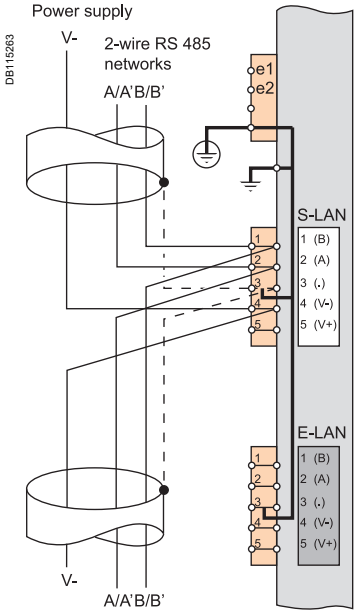

If ACE969TP-2 is used alone, the external power supply is not required. The Reference V- must be connected between the modules.

2-wire RS 485 communication ports (S-LAN or E-LAN)

- ■ Connection of the RS 485 twisted pair (S-LAN or E-LAN) to terminals A and B
- ■ In case of ACE 969TP wired with ACE969TP-2:
- □ connection of twisted pair for distributed power supply to terminals 5(V+) et 4(V-)
- ■ In case of ACE969TP-2 only:
- □ connection only on the terminal 4(V-) (ground continuity)
- □ no need of external power supply
- ■ The cable shields must be connected to the terminals marked 3(.) on the connection terminal blocks.
- ■ Terminal marked 3(.) are linked by an internal connection to the earthing terminals of the ACE969TP interface (protective an functional earthing): le the shielding of the RS 485 cables is earthed as well.
- ■ On the ACE969TP-2 interface, the cable clamps for the S-LAN and E-LAN RS 485 networks are earthed by the terminal 3.

ACE969TP-2 and ACE969FO-2 Multi-protocol interfaces
Connection

DE81271

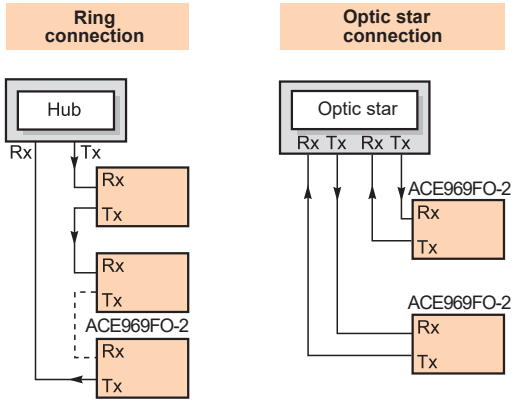

Fiber optic communication port (S-LAN)

⚠ CAUTION

HAZARD OF BLINDING
Never look directly into the fiber optic.
Failure to follow these instructions can result in injury.

The fiber optic connection can be made:
- point-to-point to an optic star system
- in a ring system (active echo).

The sending and receiving fiber optic fibers must be equipped with male ST type connectors.
The fiber optics are screw-locked to Rx and Tx connectors.

ACE850TP and ACE850FO Multi-protocol interfaces

PB105301



ACE850TP communication interface.

PB105300



ACE850FO communication interface.

Function

The ACE850 multi-protocol communication interfaces are for Sepam series 40, Easergy Sepam series 60 and Easergy Sepam series 80.
ACE850 interfaces have two Ethernet communication ports to connect a Sepam to a single Ethernet network depending on the topology (star or ring):
- For a star topology, only one communication port is used.
- For a ring topology, both Ethernet communication ports are used to provide redundancy. This redundancy conforms to the RSTP 802.1d 2004 standard.

Either port can be used for connection:
- To the S-LAN (Supervisory Local Area Network) port to connect Sepam to an Ethernet communication network dedicated to supervision, using one of the two following protocols:
  - IEC 61850
  - Modbus TCP/IP TR A15
- To the E-LAN (Engineering Local Area Network) port, reserved for Sepam remote parameter setting and operation using the SFT2841 software

There are two versions of the ACE850 interfaces, which are identical except for the type of port featured:
- ACE850TP (Twisted Pair), for connection to an Ethernet network (S-LAN or E-LAN) using a copper RJ45 10/100 Base TX Ethernet link
- ACE850FO (Fiber Optic), for connection to an Ethernet network (S-LAN or E-LAN) using a 100Base FX fiber-optic connection (star or ring)

Compatible Sepam

The ACE850TP and ACE850FO multi-protocol communication interfaces are compatible with:
- Sepam series 40 version ⩾ V7.00
- Easergy Sepam series 60 all versions
- Easergy Sepam series 80 base version and application version ⩾ V6.00

The ACE850 multi-protocol communication interfaces will only work if TCP/IP firmware option (ref. 59754) has been ordered with Sepam series 40, Easergy Sepam series 60 or Easergy Sepam series 80.

ACE850TP and ACE850FO Multi-protocol interfaces

Characteristics

ACE850TP and ACE850FO module

Technical characteristics

Weight		0.4 kg (0.88 lb)	
Assembly		On symmetrical DIN rail	
Operating temperature		-25°C to +70°C (-13°F to +158°F)	
Environmental characteristics		Same characteristics as Sepam base units	
Power supply			
Voltage		24 to 250 V DC	110 to 240 V AC
Range		-20%/+10%	-20%/+10%
Maximum consumption	ACE850TP	3.5 W in DC	1.5 VA in AC
	ACE850FO	6.5 W in DC	2.5 VA in AC
Inrush current		< 10 A 10 ms in DC	< 15 A 10 ms in AC
Acceptable ripple content		12%	
Acceptable momentary outages		100 ms	

Wired Ethernet communication ports (ACE850TP)

Number of ports	2 x RJ45 ports
Type of port	10/100 Base TX
Protocols	HTTP, FTP, SNMP, SNTP, ARP, SFT, IEC 61850, TCP/IP, RSTP 801.1d 2004
Baud rate	10 or 100 Mbps
Medium	Cat 5 STP or FTP or SFTP
Maximum distance	100 m (328 ft)

Fiber-optic Ethernet communication ports (ACE850FO)

Number of ports	2
Type of port	100 Base FX
Protocols	HTTP, FTP, SNMP, SNTP, ARP, SFT, IEC 61850, TCP/IP, RSTP 801.1d 2004
Baud rate	100 Mbps
Fiber type	Multimode
Wavelength	1300 nm
Type of connector	SC

Fiber optic diameter (µm)	Tx minimum optical power (dBm)	Tx maximum optical power (dBm)	RX sensitivity (dBm)	RX saturation (dBm)	Maximum distance
50/125	-22.5	-14	-33.9	-14	2 km (1.24 mi)
62.5/125	-19	-14	-33.9	-14	2 km (1.24 mi)

Dimensions

DE80441

mm
in

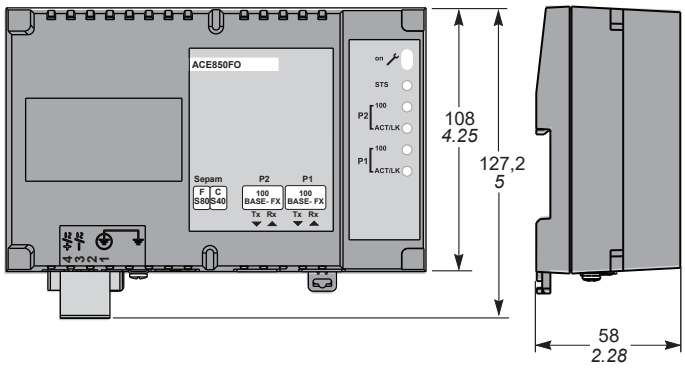

DE80403

mm
in

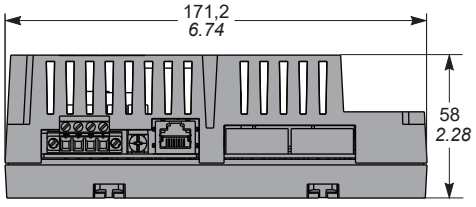

ACE850TP and ACE850FO Multi-protocol interfaces
Description

ACE850TP communication interface

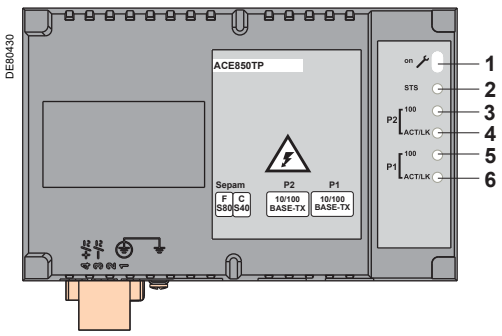

ACE850TP: Front view.

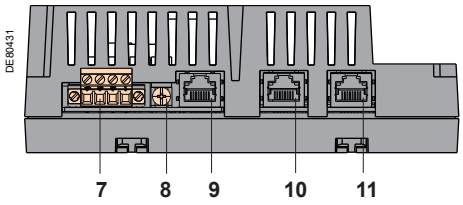

ACE850TP: View of underside.

1 ACE850 communication interface status LED
- ■ LED off = ACE850 de-energized
- ■ Green LED permanently on = ACE850 energized and operational
- ■ Red LED flashing = ACE850 not configured and/or not connected to the base unit
- ■ Red LED permanently on = ACE850 not operational (initialization in progress or failed)

2 STS LED: communication status: green permanently on = OK
3 Ethernet Port 2 100 green LED: off = 10 Mbps, permanently on = 100 Mbps
4 Ethernet Port 2 activity LED: flashing on transmission/reception
5 Ethernet Port 1 100 green LED: off = 10 Mbps, permanently on = 100 Mbps
6 Ethernet Port 1 activity LED: flashing on transmission/reception

7 Power-supply terminal block
8 Grounding/earthing terminal using supplied braid
9 RJ45 socket to connect the interface to the Sepam base unit with the CCA614 cord:
- ■ Sepam series 40: communication port (C) (identified by a white label on the Sepam unit)
- ■ Easergy Sepam series 60 and series 80: communication port (F) (identified by a blue label on the Sepam unit)

10 RJ45 10/100 Base TX Ethernet communication port P2 (E-LAN or S-LAN)
11 RJ45 10/100 Base TX Ethernet communication port P1 (E-LAN or S-LAN)

ACE850FO communication interface

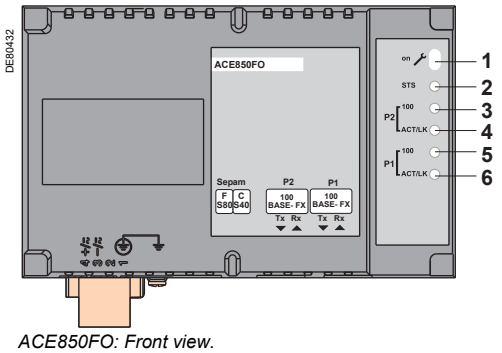

ACE850FO: Front view.

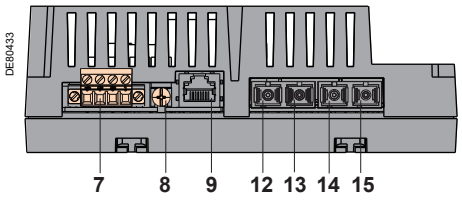

ACE850FO: View of underside.

1 ACE850 communication interface status LED
- ■ LED off = ACE850 de-energized
- ■ Green LED permanently on = ACE850 energized and operational
- ■ Red LED flashing = ACE850 not configured and/or not connected to the base unit
- ■ Red LED permanently on = ACE850 not operational (initialization in progress or failed)

2 STS LED: communication status: green permanently on = OK
3 Ethernet Port 2 100 green LED: permanently on = 100 Mbps
4 Ethernet Port 2 activity LED: flashing on transmission/reception
5 Ethernet Port 1 100 green LED: permanently on = 100 Mbps
6 Ethernet Port 1 activity LED: flashing on transmission/reception

7 Power-supply terminal block
8 Grounding/earthing terminal using supplied braid
9 RJ45 socket to connect the interface to the Sepam base unit with a CCA614 cord:
- ■ Sepam series 40: communication port (C) (identified by a white label on the Sepam unit)
- ■ Easergy Sepam series 60 and series 80: communication port (F) (identified by a blue label on the Sepam unit)

12 Tx fiber of 100 Base FX SC connector for Ethernet communication port P2 (E-LAN or S-LAN)
13 Rx fiber of 100 Base FX SC connector for Ethernet communication port P2 (E-LAN or S-LAN)
14 Tx fiber of 100 Base FX SC connector for Ethernet communication port P1 (E-LAN or S-LAN)
15 Rx fiber of 100 Base FX SC connector for Ethernet communication port P1 (E-LAN or S-LAN)

⚠ CAUTION

HAZARD OF BLINDING
Never look directly into the end of the fiber optic.
Failure to follow these instructions can result in injury.

ACE850TP and ACE850FO Multi-protocol interfaces
Connection

DE80444

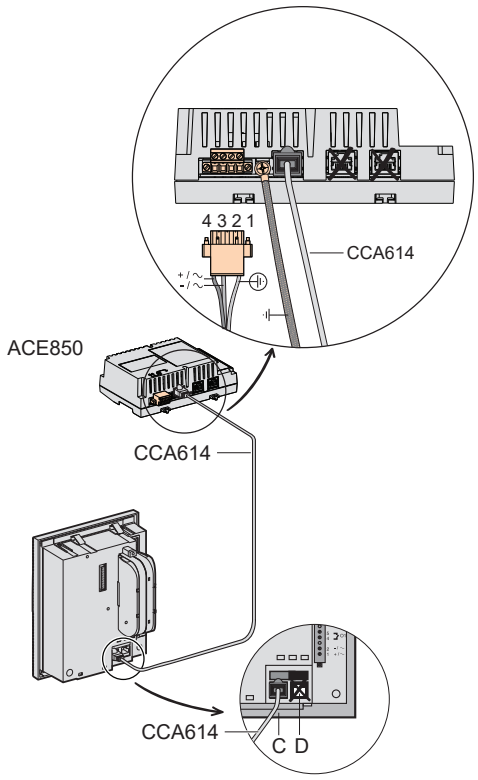

Connecting the ACE850 to Sepam series 40.

Connection to Sepam

■ The ACE850 communication interface should only be connected to Sepam series 40, Easergy Sepam series 60 or 80 base units using a CCA614 prefabricated cord (length = 3 m or 9.8 ft, blue RJ45 fittings).
■ Sepam series 40: Connect the CCA614 cord to connector (C) on the Sepam base unit (white label).
■ Easergy Sepam series 60 or series 80: Connect the CCA614 cord to connector (F) on the Sepam base unit (blue label).

Connection of power supply

The ACE850 interfaces must be supplied with 24 to 250 V DC or 110 to 240 V AC.

⚠ DANGER

HAZARD OF ELECTRIC SHOCK, ELECTRIC ARC OR BURNS

■ Only qualified personnel should install this equipment. Such work should be performed only after reading this entire set of instructions and checking the technical characteristics of the device.
■ NEVER work alone.
■ Turn off all power supplying this equipment before working on or inside it. Consider all sources of power, including the possibility of backfeeding.
■ Always use a properly rated voltage sensing device to confirm that all power is off.
■ Start by connecting the device to the protective ground and to the functional ground.
■ Screw tight all terminals, even those not in use.

Failure to follow these instructions will result in death or serious injury.

DE80445

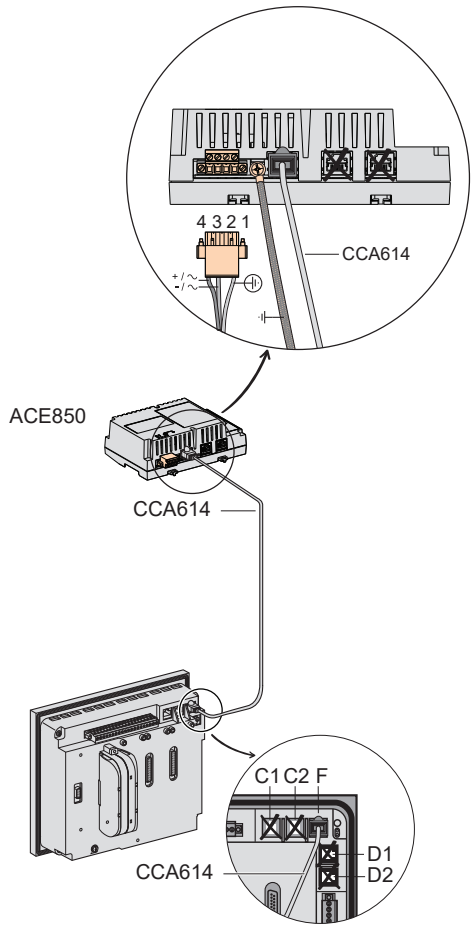

Connecting the ACE850 to Easergy Sepam series 60 or series 80.

Terminal	Assignment	Type	Wiring
3 4	-/~ +/~	Screw terminals	■ Wiring without fittings: □ 1 wire with maximum cross-section 0.5 to 2.5 mm² (≥ AWG 20-12) or 2 wires with maximum cross-section 0.5 to 1 mm² (≥ AWG 20-18) □ Stripped length: 8 to 10 mm (0.31 to 0.39 in) ■ Wiring with fittings: □ Recommended wiring with Schneider Electric fitting: - DZ5CE015D for 1 wire 1.5 mm² (AWG 16) - DZ5CE025D for 1 wire 2.5 mm² (AWG 12) - AZ5DE010D for 2 wires 1 mm² (AWG 18) □ Tube length: 8.2 mm (0.32 in) □ Stripped length: 8 mm (0.31 in)
DE51962 1 ⏚	Protective earth	Screw terminal	1 green/yellow wire, max. length 3 m (9.8 ft) and max. cross-section 2.5 mm² (AWG 12)
DE51845 ⏚	Functional earth	4 mm (0.16 in) ring lug	Earthing braid (supplied) for connection to cubicle grounding

6

ACE850TP and ACE850FO Multi-protocol interfaces
Connection

ACE850TP or ACE850FO communication architectures

Performance

Redundancy performance tests have been conducted using RuggedCom switches (RS900xx, RSG2xxx family), compatible with RSTP 802.1d 2004.
To ensure optimum performance of the protection system during communication between Sepam units via GOOSE messages, we strongly recommend setting up a fault-tolerant fiber-optic ring structure as shown in the connection examples.

Note: *Protection performance during communication between Sepam units via GOOSE message is only ensured by using:*
- *Fiber-optic connections*
- *IEC 61850-compatible managed Ethernet switches*

ROOT Ethernet switch

The ROOT Ethernet switch is the master switch of the RSTP reconfiguration function:
- A single ROOT Ethernet switch per Ethernet network, in the main loop of the network
- A Sepam unit must not be the ROOT Ethernet switch of the network

Example of Sepam units connected in a star configuration

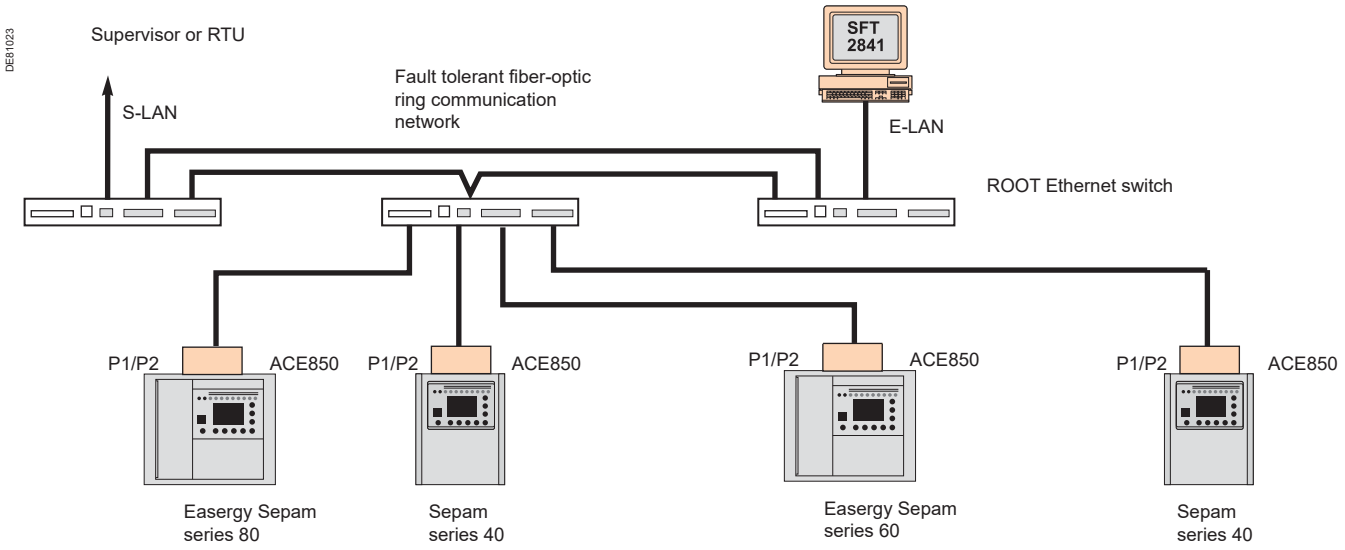

ACE850TP and ACE850FO Multi-protocol interfaces
Connection

Example of Sepam units connected in a ring configuration

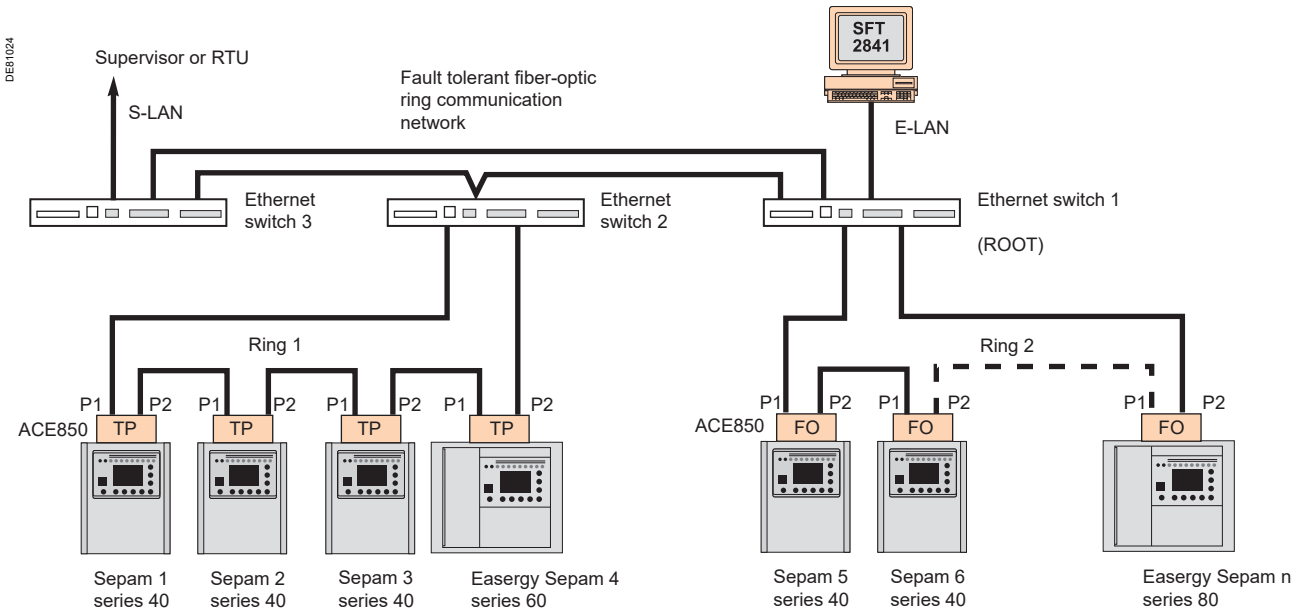

Recommendations for connecting Sepam units in ring configuration

When connecting Sepam units in the same ring configuration, the ACE850 interfaces must be of the same type (either ACE850TP or ACE850FO).
In the worst-case scenario, each Sepam unit must not be separated by more than 30 communicating devices connected to the network (other Sepam units or Ethernet switches) from the ROOT Ethernet switch.
A worst-case analysis must be performed for all the Sepam units in each network topology.
Example:

- In the best-case scenario, Sepam 2 of ring 1 is separated from the ROOT Ethernet switch by 2 devices: switch 2 and Sepam 1.
- In the worst-case scenario, i.e. if the connections between switches 1 and 2 and between Sepam units 1 and 2 of ring 1 are broken, Sepam 2 of ring 1 will be separated from the ROOT Ethernet switch by 4 devices: switch 3, switch 2, Sepam 4 and Sepam 3.

ACE909-2
RS 232/RS 485 converter

PE80317



ACE909-2 RS 232/RS 485 converter.

Function

The ACE909-2 converter is used to connect a master/central computer equipped with a V24/RS 232 type serial port as a standard feature to stations connected to a 2-wire RS 485 network.
Without requiring any flow control signals, after the parameters are set, the ACE909-2 converter performs conversion, network polarization and automatic dispatching of frames between the master and the stations by two-way simplex (half-duplex, single-pair) transmission.
The ACE909-2 converter also provides a 12 V DC or 24 V DC supply for the distributed power supply of the Sepam ACE949-2, ACE959 or ACE969-2 interfaces.
The communication settings should be the same as the Sepam and supervisor communication settings.

⚠ ⚠ DANGER

HAZARD OF ELECTRIC SHOCK, ELECTRIC ARC OR BURNS

- Only qualified personnel should install this equipment. Such work should be performed only after reading this entire set of instructions and checking the technical characteristics of the device.
- NEVER work alone.
- Turn off all power supplying this equipment before working on or inside it. Consider all sources of power, including the possibility of backfeeding.
- Always use a properly rated voltage sensing device to confirm that all power is off.
- Start by connecting the device to the protective earth and to the functional earth.
- Screw tight all terminals, even those not in use.

Failure to follow these instructions will result in death or serious injury.

Characteristics

Mechanical characteristics	
Weight	0.280 kg (0.617 lb)
Assembly	On symmetrical or asymmetrical DIN rail
Electrical characteristics	
Power supply	110 to 220 V AC ± 10%, 47 to 63 Hz
Galvanic isolation between ACE power supply and frame, and between ACE power supply and interface supply	2000 Vrms, 50 Hz, 1 min
Galvanic isolation between RS 232 and RS 485 interfaces	1000 Vrms, 50 Hz, 1 min
Protection by time-delayed fuse 5 mm x 20 mm (0.2 in x 0.79 in)	1 A rating
Communication and Sepam interface distributed supply	
Data format	11 bits: 1 start, 8 data, 1 parity, 1 stop
Transmission delay	< 100 ns
Distributed power supply for Sepam interfaces	12 V DC or 24 V CC, 250 mA max.
Maximum number of Sepam interfaces with distributed supply	12
Environmental characteristics	
Operating temperature	-5°C to +55°C (+23°F to +131°F)

Electromagnetic compatibility	**IEC standard**	**Value**
Fast transient bursts, 5 ns	60255-22-4	4 kV with capacitive coupling in common mode 2 kV with direct coupling in common mode 1 kV with direct coupling in differential mode
1 MHz damped oscillating wave	60255-22-1	1 kV common mode 0.5 kV differential mode
1.2/50 µs impulse waves	60255-5	3 kV common mode 1 kV differential mode

ACE909-2
RS 232/RS 485 converter

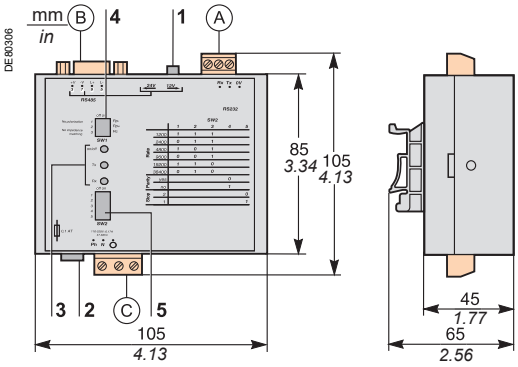

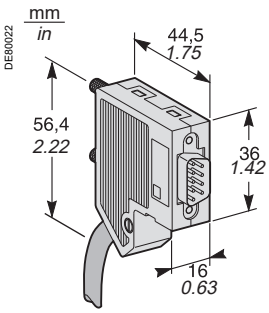

Male 9-pin sub-D connector supplied with the ACE909-2.

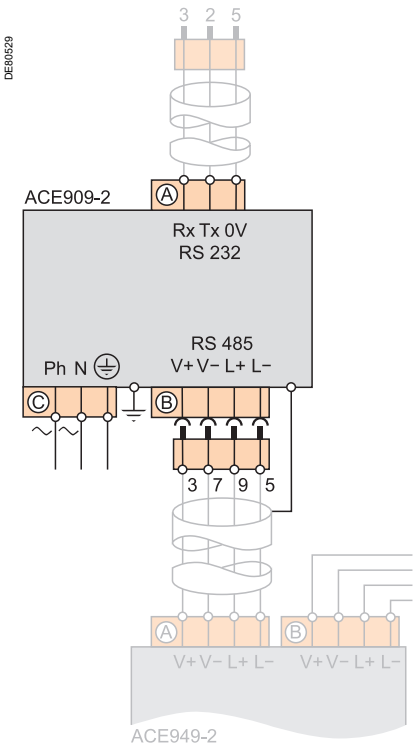

Description and dimensions

(A) Terminal block for RS 232 link limited to 10 m (33 ft).

(B) Female 9-pin sub-D connector to connect to the 2-wire RS 485 network, with distributed power supply.
1 screw-type male 9-pin sub-D connector is supplied with the converter.

(C) Power-supply terminal block

1 Distributed power supply voltage selector switch, 12 V DC or 24 V DC.
2 Protection fuse, unlocked by a 1/4 turn.
3 LEDs:
- ON/OFF: on if ACE909-2 is energized
- Tx: on if RS 232 sending by ACE909-2 is active
- Rx: on if RS 232 receiving by ACE909-2 is active.

4 SW1, parameter setting of 2-wire RS 485 network polarization and line impedance matching resistors.

Function	SW1/1	SW1/2	SW1/3
Polarization at 0 V via Rp -470 Ω	ON		
Polarization at 5 V via Rp +470 Ω		ON	
2-wire RS 485 network impedance matching by 150 Ω resistor			ON

5 SW2, parameter setting of asynchronous data transmission rate and format (same parameters as for RS 232 link and 2-wire RS 485 network).

Rate (bauds)	SW2/1	SW2/2	SW2/3		
1200	1	1	1		
2400	0	1	1		
4800	1	0	1		
9600	0	0	1		
19200	1	1	0		
38400	0	1	0		
Format				**SW2/4**	**SW2/5**
With parity check				0	
Without parity check				1	
1 stop bit (compulsory for Sepam)					1
2 stop bits					0

Converter configuration when delivered
- 12 V DC distributed power supply
- 11-bit format, with parity check
- 2-wire RS 485 network polarization and impedance matching resistors activated.

Connection

RS 232 link
- To 2.5 mm² (AWG 12) screw type terminal block (A)
- Maximum length 10 m (33 ft)
- Rx/Tx: RS 232 receiving/sending by ACE909-2
- 0V: Rx/Tx common, do not earth.

2-wire RS 485 link with distributed power supply
- To connector (B) female 9-pin sub-D
- 2-wire RS 485 signals: L+, L-
- Distributed power supply: V+ = 12 V DC or 24 V DC, V- = 0 V.

Power supply
- To 2.5 mm² (AWG 12) screw type terminal block (C)
- Reversible phase and neutral
- Earthed via terminal block and metal case (ring lug on back of case).

ACE919CA and ACE919CC RS 485/RS 485 converters

PE80316



ACE919CC RS 485/RS 485 converter.

Function

The ACE919 converters are used to connect a master/central computer equipped with an RS 485 type serial port as a standard feature to stations connected to a 2-wire RS 485 network.
Without requiring any flow control signals, the ACE919 converters perform network polarization and impedance matching.
The ACE919 converters also provide a 12 V DC or 24 V DC supply for the distributed power supply of the Sepam ACE949-2, ACE959 or ACE969-2 interfaces.
There are 2 types of ACE919 converter:

- ACE919CC, DC-powered
- ACE919CA, AC-powered.

⚠ ⚠ DANGER

HAZARD OF ELECTRIC SHOCK, ELECTRIC ARC OR BURNS

- Only qualified personnel should install this equipment. Such work should be performed only after reading this entire set of instructions and checking the technical characteristics of the device.
- NEVER work alone.
- Turn off all power supplying this equipment before working on or inside it. Consider all sources of power, including the possibility of backfeeding.
- Always use a properly rated voltage sensing device to confirm that all power is off.
- Start by connecting the device to the protective earth and to the functional earth.
- Screw tight all terminals, even those not in use.

Failure to follow these instructions will result in death or serious injury.

Characteristics

Mechanical characteristics		
Weight	0.280 kg (0.617 lb)	
Assembly	On symmetrical or asymmetrical DIN rail	
Electrical characteristics	**ACE919CA**	**ACE919CC**
Power supply	110 to 220 V AC ±10%, 47 to 63 Hz	24 to 48 V DC ±20%
Protection by time-delayed fuse 5 mm x 20 mm (0.2 in x 0.79 in)	1 A rating	1 A rating
Galvanic isolation between ACE power supply and frame, and between ACE power supply and interface supply		2000 Vrms, 50 Hz, 1 min
Communication and Sepam interface distributed supply		
Data format	11 bits: 1 start, 8 data, 1 parity, 1 stop	
Transmission delay	< 100 ns	
Distributed power supply for Sepam interfaces	12 V DC or 24 V CC, 250 mA max.	
Maximum number of Sepam interfaces with distributed supply	12	
Environmental characteristics		
Operating temperature	-5°C to +55°C (+23°F to +131°F)	
Electromagnetic compatibility	**IEC standard**	**Value**
Fast transient bursts, 5 ns	60255-22-4	4 kV with capacitive coupling in common mode 2 kV with direct coupling in common mode 1 kV with direct coupling in differential mode
1 MHz damped oscillating wave	60255-22-1	1 kV common mode 0.5 kV differential mode
1.2/50 µs impulse waves	60255-5	3 kV common mode 1 kV differential mode

ACE919CA and ACE919CC RS 485/RS 485 converters

Description and dimensions

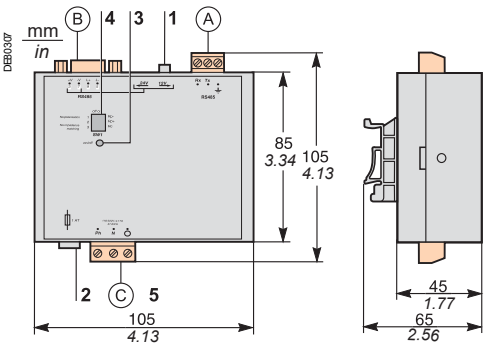

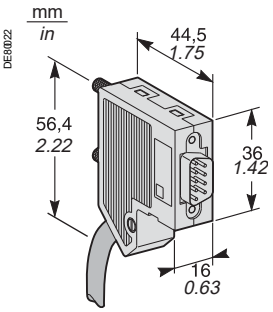

Male 9-pin sub-D connector supplied with the ACE919.

Ⓐ Terminal block for 2-wire RS 485 link without distributed power supply.

Ⓑ Female 9-pin sub-D connector to connect to the 2-wire RS 485 network, with distributed power supply.
1 screw-type male 9-pin sub-D connector is supplied with the converter.

Ⓒ Power supply terminal block.

1 Distributed power supply voltage selector switch, 12 V DC or 24 V DC.
2 Protection fuse, unlocked by a 1/4 turn.
3 ON/OFF LED: on if ACE919 is energized.
4 SW1, parameter setting of 2-wire RS 485 network polarization and line impedance matching resistors.

Function	SW1/1	SW1/2	SW1/3
Polarization at 0 V via Rp -470 Ω	ON		
Polarization at 5 V via Rp +470 Ω		ON	
2-wire RS 485 network impedance matching by 150 Ω resistor			ON

Converter configuration when delivered
- 12 V DC distributed power supply
- 2-wire RS 485 network polarization and impedance matching resistors activated.

Connection

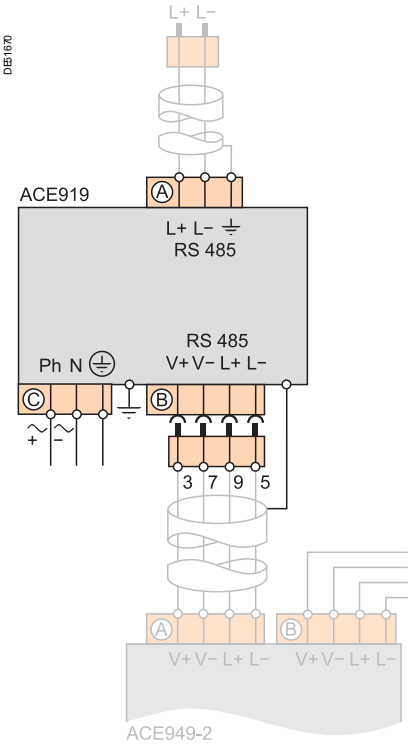

2-wire RS 485 link without distributed power supply
- To 2.5 mm² (AWG 12) screw type terminal block Ⓐ
- L+, L-: 2-wire RS 485 signals
- ⏚ Shielding.

2-wire RS 485 link with distributed power supply
- To connector Ⓑ female 9-pin sub-D
- 2-wire RS 485 signals: L+, L-
- Distributed power supply: V+ = 12 V DC or 24 V DC, V- = 0 V.

Power supply
- To 2.5 mm² (AWG 12) screw type terminal block Ⓒ
- Reversible phase and neutral (ACE919CA)
- Earthed via terminal block and metal case (ring lug on back of case).

6

ECI850
IEC 61850 Sepam server

PE80319



ECI850: IEC 61850 Sepam server.

***Note:** The end of commercialization date for ECI850 is 30 June 2017.*
You can use the ACE850 communication interface on Sepam series 40, Easergy Sepam series 60 and series 80.

Function

The ECI850 can be used to connect Sepam series 20, Sepam series 40, Easergy Sepam series 60 and series 80 to an Ethernet network using the IEC 61850 protocol.
The ECI850 creates the interface between the Ethernet/IEC 61850 network and a Sepam RS 485/Modbus network.
A PRI surge arrester (ref. 16339) is supplied with the ECI850 to protect its power supply.

Compatible Sepam

The ECI850 servers are compatible with the following Sepam:
- Sepam series 20 version ⩾ V0526
- Sepam series 40 version ⩾ V3.00
- Easergy Sepam series 60 all versions
- Easergy Sepam series 80 base version and application version ⩾ V3.00.

Characteristics

ECI850 module	
Technical characteristics	
Weight	0.17 kg (0.37 lb)
Assembly	On symmetrical DIN rail
Power supply	
Voltage	24 V DC (± 10%) supplied by a class 2 power supply
Maximum consumption	4 W
Dielectric withstand	1.5 kV
Environmental characteristics	
Operating temperature	-25 °C to +70 °C (-13 °F to +158 °F)
Storage temperature	-40 °C to +85 °C (- 40 °F to +185 °F)
Humidity ratio	5 to 95% relative humidity (non condensing) at +55 °C (131 °F)
Degree of pollution	Class 2
Tightness	IP30
Electromagnetic compatibility	
Emission tests	
Emissions (radiated and conducted)	EN 55022/EN 55011/FCC Class A
Immunity tests - Radiated disturbances	
Electrostatic discharge	EN 61000-4-2
Radiated radiofrequencies	EN 61000-4-3
Magnetic fields at the network frequency	EN 61000-4-8
Immunity tests - Conducted disturbances	
Fast transient bursts	EN 61000-4-4
Surges	EN 61000-4-5
Conducted radiofrequencies	EN 61000-4-6
Safety	
International	IEC 60950
USA	UL 508/UL 60950
Canada	cUL (complies with CSA C22.2, no. 60950)
Australia/New Zealand	AS/NZS 60950
Certification	
Europe	CE
2-wire/4-wire RS 485 communication port	
Electrical interface	
Standard	2-wire or 4-wire differential RS 485 EIA
Max. number of Sepam units per ECI850	2 Easergy Sepam series 80 or 2 Easergy Sepam series 60 or 3 Sepam series 40 or 5 Sepam series 20
Maximum network length	1000 m (3300 ft)
Ethernet communication port	
Number of ports	1
Type of port	10/100 Base Tx
Protocols	HTTP, FTP, SNMP, SNTP, ARP, SFT, IEC 61850 TCP/IP
Transmission speed	10/100 Mbps

ECI850
IEC 61850 Sepam server

Characteristics (cont'd)

PRI surge arrester	
Electrical characteristics	
Nominal operating voltage	48 V DC
Maximum discharge current	10 kA (8/20 µs wave)
Nominal discharge current	5 kA (8/20 µs wave)
Protection level	70 V
Response time	1 ns
Connection	
With cage terminals	Cables with cross-section 2.5 to 4 mm^2 (AWG 12-10)

Description

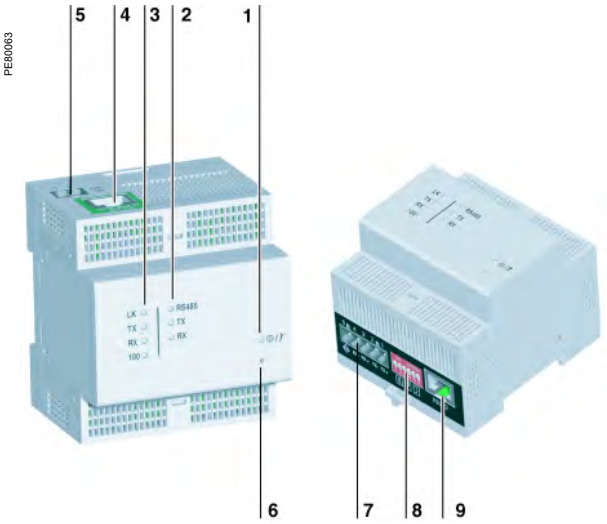

1 ⓘ/🔧 LED: power-up/maintenance
2 Standard LEDs:
- ■ RS 485 LED: network link active
- □ On: RS 485 mode
- □ Off: RS 232 mode
- ■ Flashing green Tx LED: ECI850 transmission active
- ■ Flashing green Rx LED: ECI850 reception active

3 Ethernet LEDs:
- ■ LK green LED on: network link active
- ■ Flashing green Tx LED: ECI850 transmission active
- ■ Flashing green Rx LED: ECI850 reception active
- ■ 100 green LED:
- □ On: 100 Mbps network speed
- □ Off: 10 Mbps network speed

4 10/100 Base Tx port for Ethernet connection by RJ45 connector
5 Connection of the 24 V DC supply
6 Reset button
7 RS 485 connection
8 RS 485 parameter-setting selector switches
9 RS 232 connection

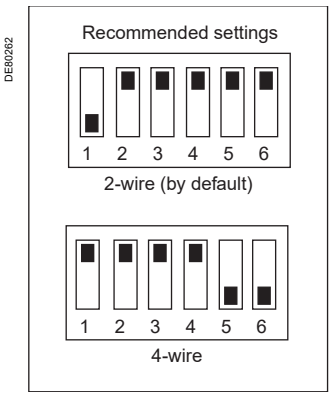

Setting the RS 485 network parameters.

Setting the RS 485 network parameters

The network polarization and line impedance matching resistors and type of 2-wire/ 4-wire RS 485 network are selected by means of the RS 485 parameter-setting selector switches. These selector switches are configured by default for a 2-wire RS 485 network with network polarization and line impedance matching resistors.

Network line impedance matching with resistor	SW1	SW2	SW3	SW4	SW5	SW6
2-wire RS 485	OFF	ON				
4-wire RS 485	ON	ON				

Network polarization	SW1	SW2	SW3	SW4	SW5	SW6
at the 0 V			ON			
at the 5 V				ON		

Selecting the RS 485 network	SW1	SW2	SW3	SW4	SW5	SW6
2-wire network					ON	ON
4-wire network					OFF	OFF

Setting the Ethernet link parameters

The TCSEAK0100 configuration kit can be used to connect a PC to the ECI850 to set the Ethernet link parameters.

ECI850
IEC 61850 Sepam server

Dimensions

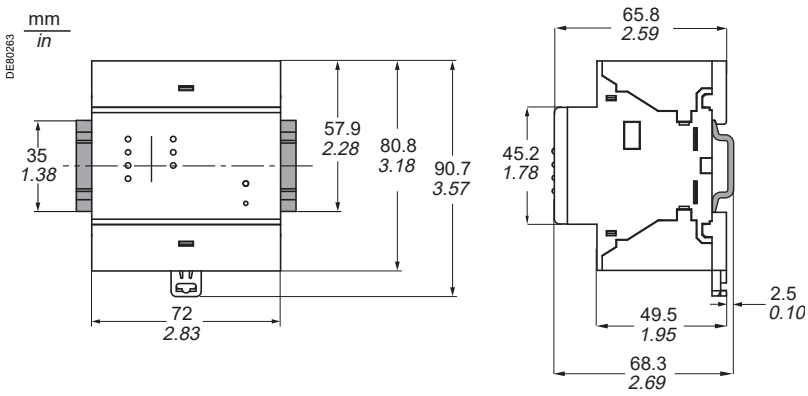

NOTICE

RISK OF DESTRUCTION OF THE ECI850

■ Connect the PRI surge arrester in accordance with the wiring diagrams below.

■ Check the quality of the earth connected to the surge arrester.

Failure to follow these instructions can result in equipment damage.

Connection

■ Connect the power supply and RS 485 twisted pair using cable with cross-section ⩽ 2.5 mm² (⩾AWG 12)

■ Connect the 24 V DC power supply and the earth to inputs (1), (5) and (3) of the PRI surge arrester (ref. 16339) supplied with the ECI850

■ Connect outputs (2), (8) and (6), (12) of the PRI surge arrester to the - and + terminals of the black screen terminal block

■ Connect the RS 485 twisted pair (2-wire or 4-wire) to the (RX+ RX- or RX+ RX- TX+ TX-) terminals of the black screw terminal block

■ Connect the RS 485 twisted pair shielding to the ⏚ terminal of the black screw terminal block

■ Connect the Ethernet cable to the green RJ45 connector

2-wire RS 485 network

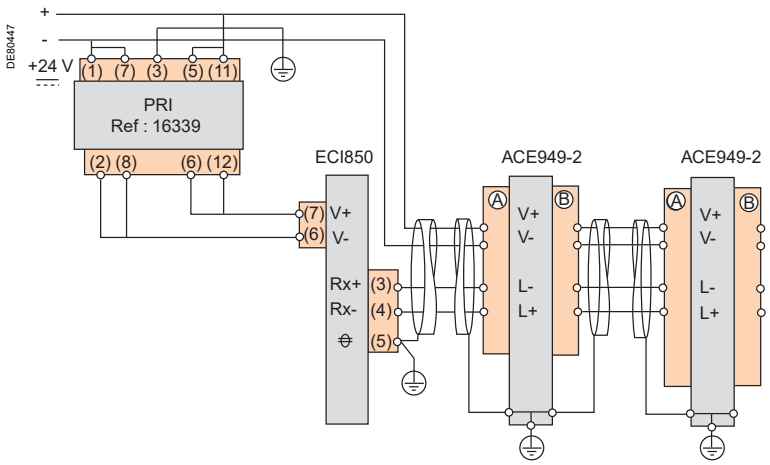

4-wire RS 485 network

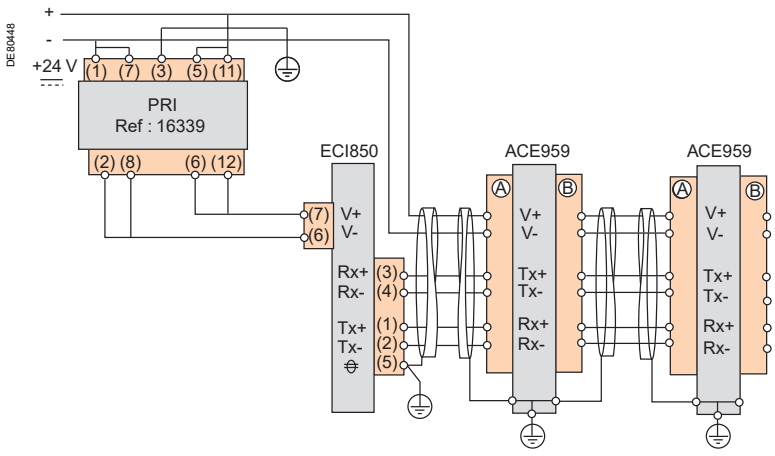

ECI850
IEC 61850 Sepam server

Example of architecture

The diagram below shows an example of the communication architecture with ECI850 IEC 61850 Sepam servers.

Note: *Rc, line impedance matching resistor*

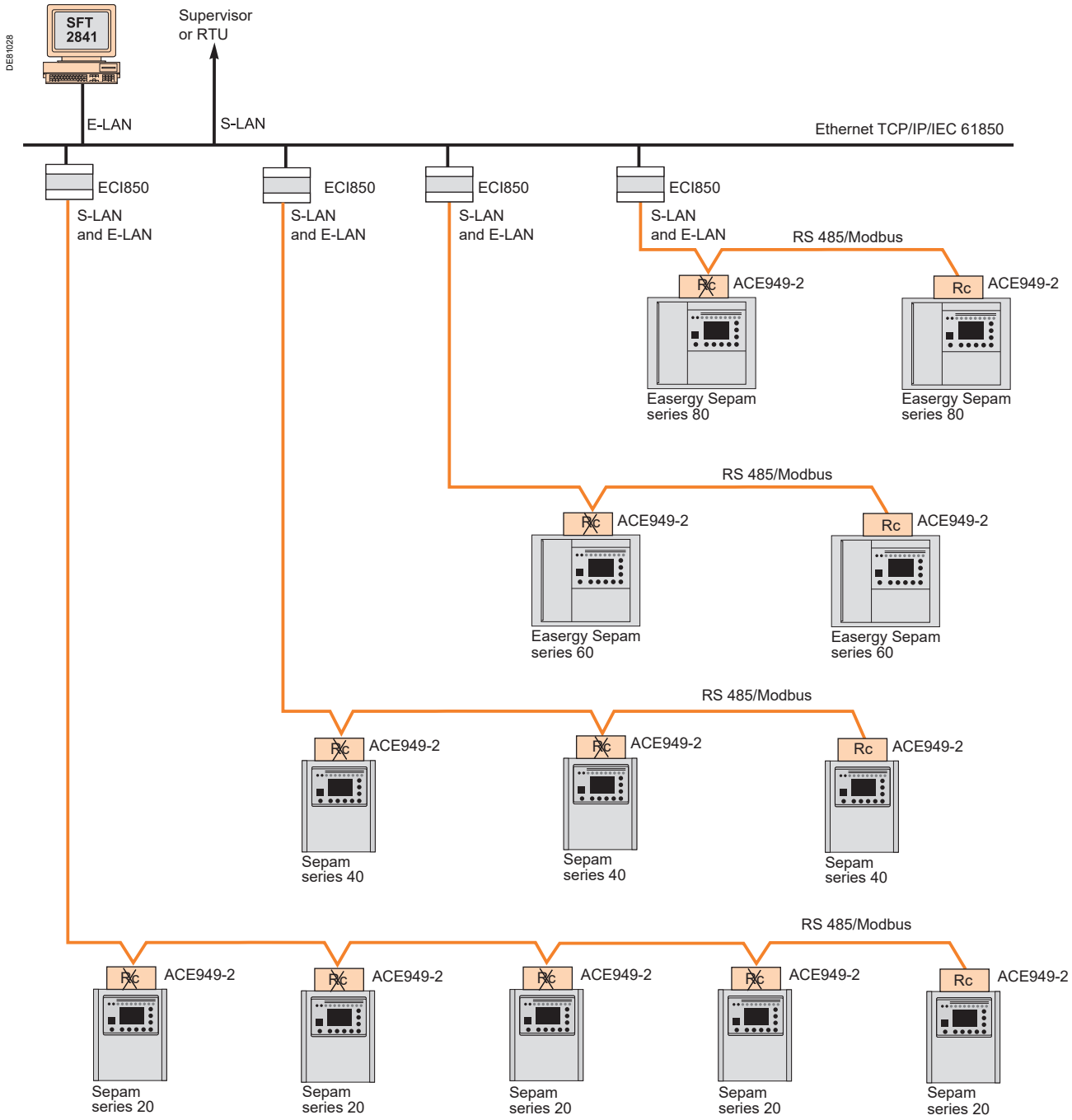

Maximum Advised Configuration

The maximum configuration of Sepam for an ECI850 IEC 61850 Sepam server of level 1 is to be choosen between the following configurations:

- 5 Sepam series 20,
- 3 Sepam series 40,
- 2 Easergy Sepam series 60,
- 2 Easergy Sepam series 80.

Contents

User-machine interfaces **414**
Presentation 414
Selection guide 415

Description of the advanced UMI **416**

Description of the mimic-based UMI **417**

Local operation on the UMI **418**
Types of operations and passwords 418
Display of operating information 419
Operating functions not requiring a password 421
Operating functions requiring a password 422
Entry of parameter and protection settings 423
Local control using the mimic-based UMI 425

SFT2841 setting and operating software **426**
Welcome window 426
Presentation 427
General screen organization 428
Use of the software 430
Creation of user messages 431
Disturbance recording 432
Implementing the Motor start report and trend functions 433
Logic-equation editing 435
Default settings 436
Configuration of a Sepam network 438

SFT2841 software Mimic-diagram editor **443**
Presentation 443
General screen organization 445
Use 447

Principles **453**

Methods **454**

Testing and metering equipment required **455**

General examination and preliminary actions **456**

Checking of phase current and voltage input connections **457**
With 3-phase generator 457
With single-phase generator and voltages delivered by 3 VTs 459
With single-phase generator and voltages delivered by 2 VTs 460
LPCT type current sensors 461

Checking of residual current and residual voltage input connections **462**

Checking of residual current input connection **463**

Checking of residual voltage input connection **464**
With voltage delivered by 3 VTs in open delta arrangement 464
With voltage delivered by 1 neutral point VT 465

Checking of Sepam C60 unbalance current input connections **466**

Checking of logic input and output connections **467**

Checking of GOOSE logic input connections **468**

Checking of optional module connections **469**

Validation of the complete protection chain **470**

Test sheet **471**
Easergy Sepam series 60 471

Troubleshooting assistance **473**

Replacing the base unit
Replacing the battery **477**

Maintenance tests **478**

Firmware modifications **479**
Application cartridge firmware 479
Base firmware 480
Cartridge and base firmware compatibility table 481

User-machine interfaces
Presentation

Two types of User-Machine Interfaces (UMI) are available for Sepam base units:
- mimic-based UMI
- advanced UMI.

The advanced UMI can be integrated in the base unit or installed remotely on the cubicle. Integrated and remote advanced UMIs offer the same functions.

A Sepam with a remote advanced UMI is made up of:
- a bare base unit without any UMI, for mounting inside the LV compartment
- a remote advanced UMI (DSM303)
  - for flush mounting on the front panel of the cubicle in the location most suitable for the facility manager
  - for connection to the Sepam base unit using a prefabricated CCA77x cord.

The characteristics of the remote advanced UMI module DSM303 are presented on page 380.

PE80711



Sepam base unit with integrated advanced UMI.

Comprehensive data for facility managers

All the data required for local equipment operation may be displayed on demand:
- display of all measurement and diagnosis data in numerical format with units and/or in bar graphs
- display of operating and alarm messages, with alarm acknowledgment and Sepam resetting
- display of the list of activated protection functions and the main settings of major protection functions
- adaptation of activated protection function set points or time delays in response to new operating constraints
- display of Sepam and remote module versions
- output testing and logic input status display
- entry of 2 passwords to protect parameter and protection settings.

PE80733



Sepam base unit with mimic-based UMI.

Local control of devices using the mimic-based UMI

The mimic-based UMI provides the same functions as the advanced UMI as well as local control of devices:
- selection of the Sepam control mode
- view device status on the animated mimic diagram
- local opening and closing of all the devices controlled by Sepam.

Ergonomic data presentation

- keypad keys identified by pictograms for intuitive navigation
- menu-guided access to data
- graphical LCD screen to display any character or symbol
- excellent display quality under all lighting conditions : automatic contrast setting and backlit screen (user activated).

PE50474



Customized Chinese advanced UMI.

Working language

All the texts and messages displayed on the advanced UMI or on the mimic-based UMI are available in 2 languages:
- English, the default working language
- and a second language, which may be
  - French
  - Spanish
  - another "local" language.

Please contact us regarding local language customization.

Connection of Sepam to the parameter setting tool

The SFT2841 parameter setting tool is required for Sepam protection and parameter setting.
A PC containing the SFT2841 software is connected to the RS 232 communication port on the front of the unit.

User-machine interfaces
Selection guide

Base unit	With remote advanced UMI	With integrated advanced UMI	With mimic-based UMI
	PE80734 	PE80735 	PE80736 
Functions			
Local indication			
Metering and diagnosis data	■	■	■
Alarms and operating messages	■	■	■
List of activated protection functions	■	■	■
Main protection settings	■	■	■
Version of Sepam and remote modules	■	■	■
Status of logic inputs	■	■	■
Switchgear status on the animated mimic diagram			■
Phasor diagram of currents or voltages			■
Local control			
Alarm acknowledgement	■	■	■
Sepam reset	■	■	■
Output testing	■	■	■
Selection of Sepam control mode			■
Device open/close order			■
Characteristics			
Screen			
Size	128 x 64 pixels	128 x 64 pixels	128 x 240 pixels
Automatic contrast setting	■	■	■
Backlit screen	■	■	■
Keypad			
Number of keys	9	9	14
Control-mode switch			Remote / Local / Test
LEDs			
Sepam operating status	■ base unit: 2 LEDs visible on back ■ remote advanced UMI: 2 LEDs visible on front	2 LEDs, visible from front and back	2 LEDs, visible from front and back
Indication LEDs	9 LEDs on remote advanced UMI	9 LEDs on front	9 LEDs on front
Mounting			
	■ bare base unit, mounted at the back of the compartment using the AMT880 mounting plate ■ DSM303 remote advanced UMI module , flush mounted on the front of the cubicle and connected to the base unit with the CCA77x prefabricated cord	Flush mounted on front of cubicle	Flush mounted on front of cubicle

Description of the advanced UMI

Integrated advanced UMI

Identification	Picto	Description
1		Green LED: Sepam on.
2		Red LED: Sepam unavailable.
3		9 yellow indication LEDs (L1 to L9 from left to right).
4		Label identifying the indication LEDs
5		Graphical LCD screen.
6		Display of measurements.
7		Display of switchgear, network and machine diagnosis data.
8		Display the alarm history.
9		Two-function key, depending on the screen displayed: ■ "Confirm" function for the entered values and selection.
10		Two-function key, depending on the screen displayed: ■ "Clear" function used to: □ acknowledge the active alarm □ reset the peak demand measurements and diagnosis information □ clear the alarm history
		■ "Cursor up" function.
11		Two-function key: ■ key pressed for five seconds: LED and display test
		■ key pressed briefly: Cursor down
12		Display of Sepam data.
13		Display and adaptation of the settings of active protection functions.
14		Access to screen for password entry.
15		PC connection port.
16		Backup battery.
17		Protective battery cover.
18		Memory cartridge.
19		Door.

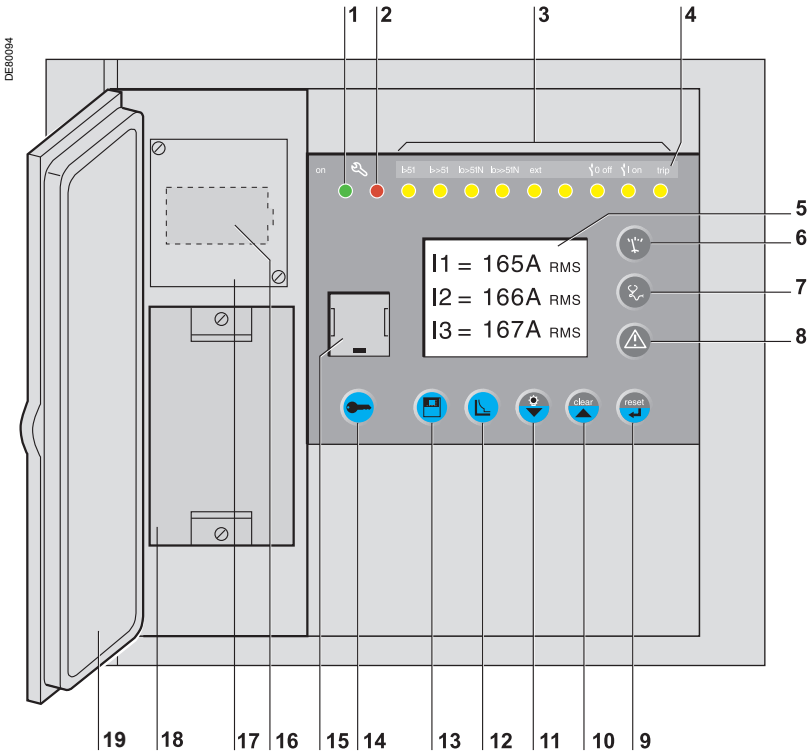

NOTICE

DAMAGE TO CARTRIDGE
Do not install or remove the memory cartridge with the power on.
Failure to follow these instructions can result in equipment damage.

DSM303 remote advanced UMI module

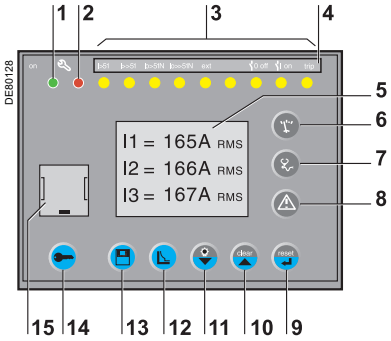

Description of the mimic-based UMI

Identification	Picto	Description
1		Graphical LCD screen.
2		Green LED: Sepam on.
3		Red LED: Sepam unavailable.
4		Local closing of devices selected on the mimic-based UMI.
5		Local opening of devices selected on the mimic-based UMI.
6		Allocation label of leds.
7		7 yellow leds, 1 red led (I), 1 green led (O), (L1 to L9 upwards)
8		Move cursor up.
9		Confirm data entry.
10		Move cursor down.
11		PC connection port.
12		Transparent door.
13		Access to screen for password entry.
14		Display the mimic-diagram.
15	reset	Reset the latched information.
16		Display the alarm history.
17	clear	Key used to: ■ acknowledge the active alarm ■ reset the peak demand measurements and diagnosis information ■ clear the alarm history.
18		Two-function key: ■ key pressed briefly: display of switchgear, network and machine diagnosis data.
		■ key pressed for five seconds: LED and display test.
19		Display and adaptation of the settings of active protection functions.
20		Display of measurements and phasor diagram.
21		Display of Sepam data.
22		Three-position key switch to select Sepam control mode: Remote, Local or Test.
23		Backup battery.
24		Protective battery cover.
25		Memory cartridge.
26		Door.

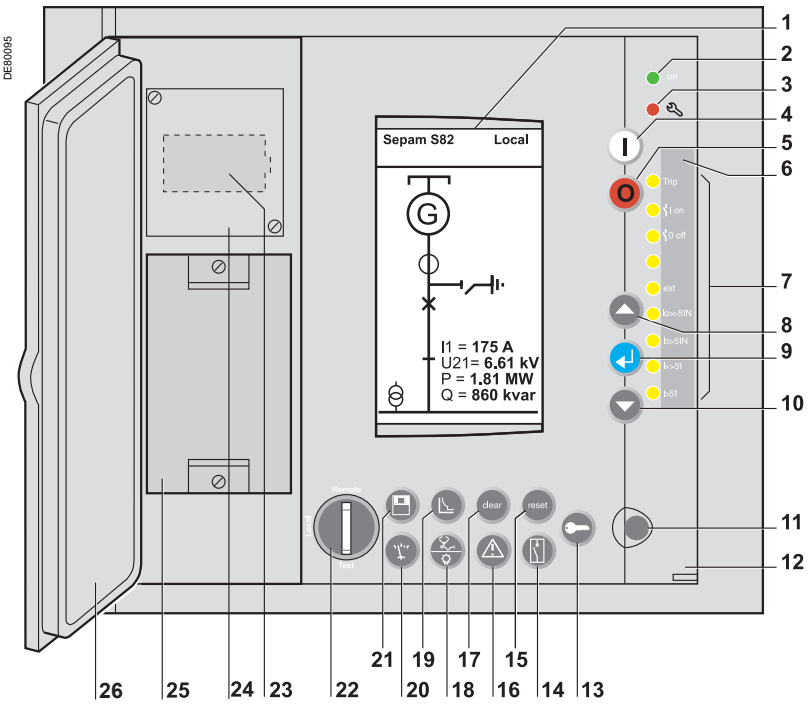

NOTICE

DAMAGE TO CARTRIDGE

Do not install or remove the memory cartridge with the power on.

Failure to follow these instructions can result in equipment damage.

Local operation on the UMI
Types of operations and passwords

Types of operations

The Sepam UMI can be used for three types of operations:
- normal operations: e.g., consult operating information, reset Sepam and acknowledge current alarms
- protection settings: e.g. modify the tripping set point of an active protection function
- modify Sepam parameters: e.g. change the operating language or set the internal clock.

Protection setting and parameter operations require a password.

Passwords

Protection setting and parameter operations are protected by two different passwords:
- password for protection settings
- password for parameter settings

The passwords have 4 digits.
The default passwords are 0000.

The table below indicates the operations authorized for each password.

Operations	No password	Protection-setting password	Parameter-setting password
Normal operation	■	■	■
Set the active protection functions		■	■
Modify Sepam parameters			■

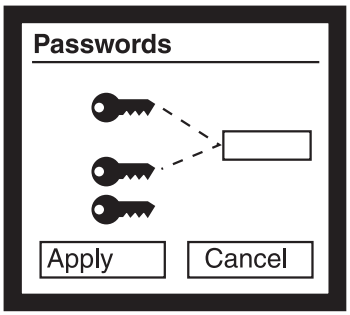

Screen for password entry.

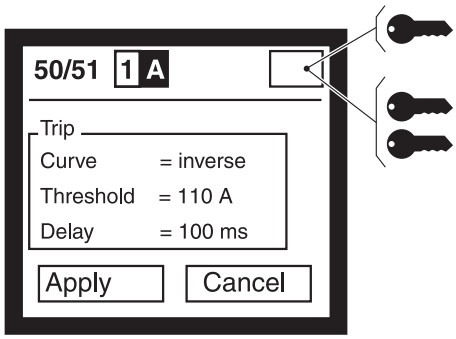

Indication of password validity on the display:
= password for protection settings is valid.
= password for parameter settings is valid.

Entry of passwords

1. Press the key to access to screen for password entry.
2. Press the key to position the cursor on the first digit.
3. Scroll the digits using the cursor keys and .
4. Confirm to go on to the following digit by pressing the key.

(Do not use characters other than numbers 0 to 9 for each of the 4 digits.)

5. When the four digits have been entered, press the key to position the cursor on [Apply].
6. Press the key again to confirm.

Validity of passwords

Indication of password validity

- After entry of the protection-setting password, the pictogram is displayed at the top of the screen.
- After entry of the parameter-setting password, the pictogram is displayed at the top of the screen.

The pictogram remains displayed as long as the password is valid and the corresponding operations are authorized.

End of validity

A password is deactivated:
- by pressing the key
- automatically if no keys are activated for more than 5 minutes.

Loss of passwords

Please contact our local after-sales service representative.

Local operation on the UMI
Display of operating information

DE51566

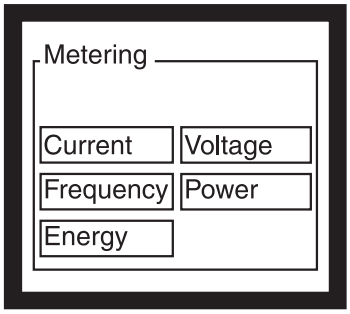

Selection screen for measurements.

DE51567

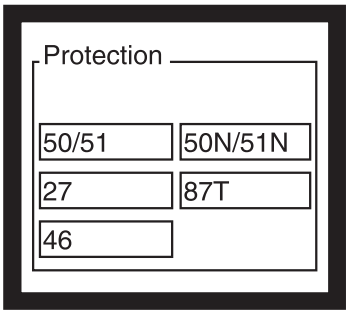

Selection screen for active protection functions.

Categories of operating information

Sepam operating information is grouped in four categories:

- measurements, accessed via the key
- diagnosis data, accessed via the key
- the alarm history, accessed via the key
- the settings of active protection functions, accessed via the key.

These five categories for the operating information are divided into subcategories to facilitate access to the desired information.

Key	Category of information	Sub-category
	Measurements	■ Current ■ Voltage ■ Frequency ■ Power ■ Energy ■ Phasor (on mimic-based UMI only)
	Switchgear, network and machine diagnosis	■ Diagnostic ■ Tripping context 0 (last recorded tripping context) ■ Tripping context -1 (next to last recorded tripping context) ■ Tripping context -2 ■ Tripping context -3 ■ Tripping context -4 ■ Out-of-sync context
	Alarm history (16 last recorded alarms)	■ List of alarms in sets of four ■ Detailed information on individual alarms
	Sepam data	■ General information: □ identification of the base unit □ minimum required version of SFT2841 software □ general parameters □ Sepam internal clock ■ Remote modules: □ module identification ■ Inputs/outputs: □ status and test of logic outputs □ status of logic inputs
	Settings of active protection functions	Access to each individual protection function, by selecting its ANSI code

Local operation on the UMI
Display of operating information

Example: measurement loop

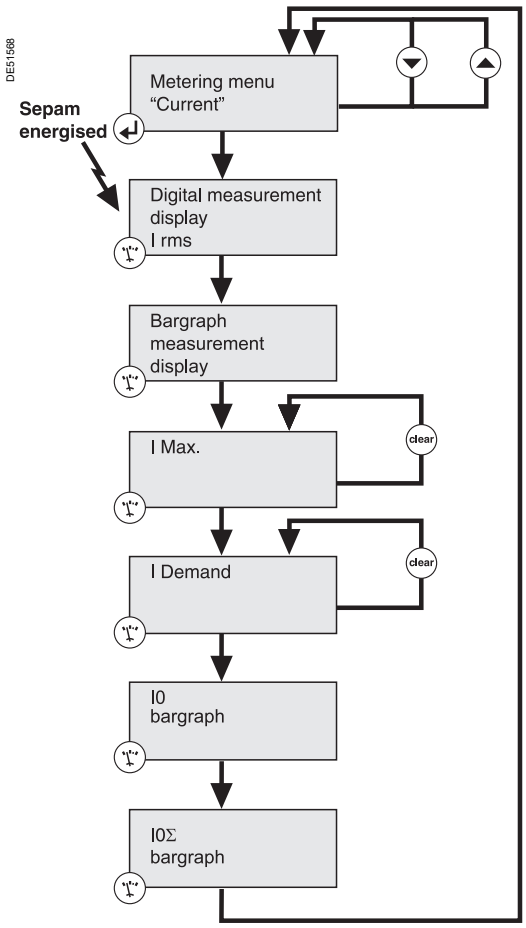

Access to operating information

- After selecting a category by pressing the corresponding key, a selection screen displays the subcategories.
- Select the subcategory with the cursor, using the ▲ and ▼ keys (the selected subcategory is displayed in inverse video).
- When the selection is validated by the ↵ key, the system displays the first screen presenting the operating information of the selected subcategory.
- Press again the key of the category displayed to go on to the next screen.
- The diagram opposite shows the progression in a given subcategory.
- When a screen cannot be completely displayed, use the ▼ and ▲ keys.

Local operation on the UMI
Operating functions not requiring a password

Reset the latched information
The (reset) key is used to reset latched information.
Sepam resetting must be confirmed.
The alarm messages are not erased.

Acknowledge the active alarm
When Sepam displays an alarm, the (clear) key is used to return to the screen displayed prior to the alarm or to a less recent unacknowledged alarm.
The (clear) key does not reset the latched information.

Reset the peak demand measurements
The following measurement and diagnosis information can be reset using the Sepam UMI:
- demand current
- peak demand current
- peak demand power.

Proceed as follows to reset the information:
1. Display the screen showing the information to be reset.
2. Press the (clear) key.

Clear the alarm history
The alarm history (last 16 alarms) stored by Sepam can be cleared as follows:
1. Press the (⚠) key to display the alarm history.
2. Press the (clear) key.

Test the LEDs and the display
The test on the LEDs and the display checks each LED and each pixel in the display.

Proceed as follows to run the test:
1. Press the (☼) key for five seconds.
2. The nine LEDs go on successively in a predefined sequence.
3. Then the pixels in the display go on successively in a predefined sequence.

Local operation on the UMI
Operating functions requiring a password

Reset the diagnosis information

The diagnosis information for certain protection functions can be reset using the Sepam UMI, after entering the parameter-setting password.
The information is listed below:
- the number of starts before inhibition, linked with the "Starts per hour" function (ANSI 66)
- heat rise calculated by the "Thermal overload" function (ANSI 49RMS).

Proceed as follows to reset the information:
1. Enter the password for parameter settings.
2. Display the screen showing the information to be reset.
3. Press the clear key.

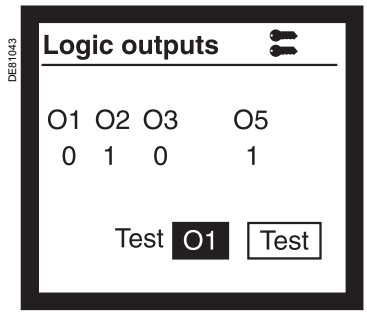

Screen presenting the logic outputs of the base unit and the status of each output, with the possibility of testing each output.

Test the logic outputs

It is possible to change the status of each logic output for five seconds. The check on logic-output connections and switchgear operation is thus simplified.

The screens on the logic outputs may be accessed in the "Sepam information" category, then in the "Inputs/outputs" subcategory.
The first screen presents the logic outputs of the base unit and up to three additional screens present the logic outputs of the additional MES120 modules.
A "Logic outputs" screen presents the status of all the logic outputs for a module and can be used, following entry of the parameter-setting password, to change the status of each output to check its operation.

Proceed as follows to test a logic output:
1. Enter the password for parameter settings.
2. Display the screen showing the logic output to be tested.
3. Go to the selection field for the output to be tested by pressing the ↵ key4.
4. Scroll the addresses of the logic outputs in the module using the cursor keys ▼ and ▲ to select the desired logic output.
5. Confirm the selected output by pressing the ↵ key.
6. Press the ▼ or ▲ key to go on to the [Test] box.
7. Press the ↵ key to change the status of the logic output for five seconds.

Local operation on the UMI
Entry of parameter and protection settings

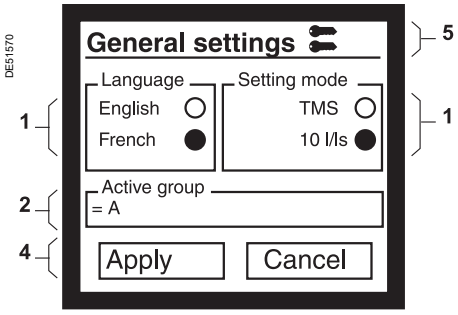

"General parameters" screen.

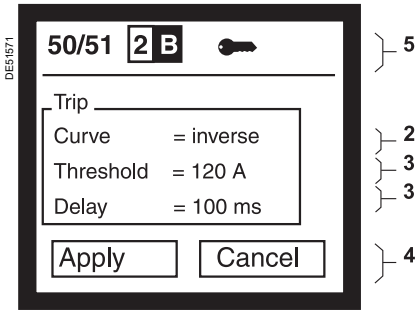

Setting screen for the "phase overcurrent" protection function (ANSI 50/51).

***1**. Boolean setting.*
***2**. Selection of a value among a number of options.*
***3**. Numerical value.*
***4**. Boxes for final validation (Apply) or to cancel (Cancel) the procedure.*
***5**. Pictogram indicating that the user is authorized to modify parameters and protection settings (after entry of the parameter-setting password).*

Data entry principles

The principles behind the entry of parameter and protection settings are identical.

There are four steps in modifying parameter or protection settings using the Sepam UMI:
1. Enter the suitable password for either the protection or the parameter settings (see "Entry of passwords", page 418).
2. Display the screen with the value to be modified (see "Display of operating information", page 419).
3. Modify the values using one of the three entry methods offered, depending on the type of parameter or protection settings:
   - entry of Boolean values
   - selection of a value among a number of options
   - entry of numerical values
4. Final confirmation of all the new parameter or protection settings for use by Sepam.

Entry of Boolean values

Boolean parameters and protection settings are shown on the Sepam display as two buttons, representing the two status conditions of Boolean data.
For example, the language used for the operating texts on the Sepam UMI is a Boolean parameter that can have one of two states:
- English
- a local language (e.g. French).

To modify the value of a Boolean parameter or protection setting, proceed as follows:
1. Position the cursor using the ▼ and ▲ keys.
2. Confirm the selection using the ↵ key.

Selection of a value among a number of options

Certain parameters and protection settings must be selected from a finite number of possibilities.
For example, the type of tripping curve for the "phase overcurrent" protection function is selected from among 16 predefined curves (DT, SIT, VIT, EIT, etc.).

To select the desired parameter or protection setting, proceed as follows:
1. Position the cursor on the value to be modified using the ▼ and ▲ keys.
2. Confirm using the ↵ key.
3. Scroll the possibilities using the ▼ and ▲ keys.
4. Confirm the new value by pressing the ↵ key.

Entry of numerical values

Numerical parameters and protection settings are shown on the Sepam display as three digits, with or without the decimal point and the unit symbol.

To modify the value of a numerical parameter or protection setting, proceed as follows:
1. Position the cursor on the value to be modified using the ▼ and ▲ keys.
2. Confirm by pressing the ↵ key to position the cursor on the first digit.
3. Scroll the characters using the cursor keys ▼ and ▲: the available characters are the digits from 0 to 9, the decimal point and a space.
4. Confirm to go on to the following digit by pressing the ↵ key.
5. After confirming the third digit, the cursor is positioned on the unit symbol.
6. Scroll the available units using the ▼ and ▲ keys and confirm the selected unit by pressing the ↵.

Final confirmation of modifications

After modifying one or more parameters or protection settings on a screen, confirmation is required before Sepam takes the modifications into account.

To confirm all the parameter and protection settings modified on a screen, proceed as follows:

1. Position the cursor on the [Apply] box at the bottom of the screen using the ▼ key.
2. Confirm using the ↵ key.

The new parameter or protection settings are taken into account by Sepam.

Local operation on the UMI
Local control using the mimic-based UMI

PE80330



Local control using the mimic-based UMI.

Sepam control mode

A key-switch on the mimic-based UMI is used to select the Sepam control mode. Three modes are available: Remote, Local or Test.

In Remote mode:
- remote control orders are taken into account
- local control orders are disabled, with the exception of the circuit-breaker open order.

In Local mode:
- remote control orders are disabled, with the exception of the circuit-breaker open order
- local control orders are enabled.

Test mode should be selected for tests on equipment, e.g. during preventive-maintenance operations:
- all functions enabled in Local mode are available in Test mode
- no remote indications (TS) are sent via the communication link.

View device status on the animated mimic diagram

For safe local control of devices, all information required by operators can be displayed simultaneously on the mimic-based UMI:
- single-line diagram of the equipment controlled by Sepam, with an animated, graphic indication of device status in real time
- the desired current, voltage and power measurements.

The local-control mimic diagram can be customized by adapting one of the supplied, predefined diagrams or by creating a diagram from scratch.

Local control of devices

All the devices for which opening and closing are controlled by Sepam can be controlled locally using the mimic-based UMI.
The most common interlock conditions can be defined by logic equations.

The sure and simple operating procedure is the following:
- select the Local or Test control mode
- select the device to be controlled by moving the selection window using the keys ▲ or ▼. Sepam checks whether local control of the selected device is authorized and informs the operator (selection window with a solid line).
- selection confirmation for the device to be controlled by pressing the key ↵ (the selection window flashes).
- device control by pressing:
  - key O: open order
  - or key I: close order.

7

SFT2841 setting and operating software
Welcome window

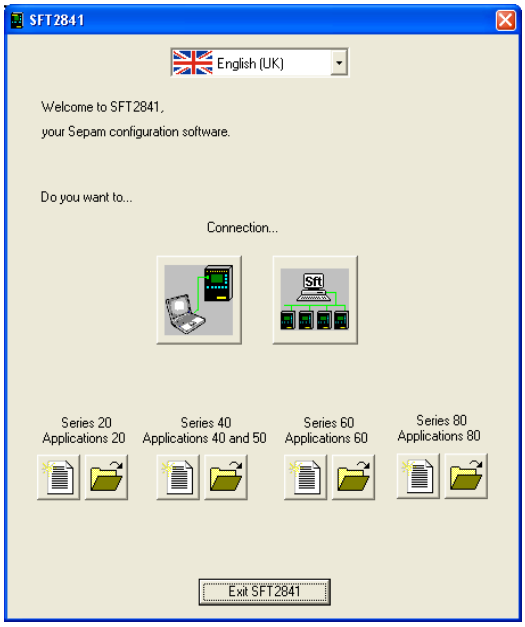

Welcome window.

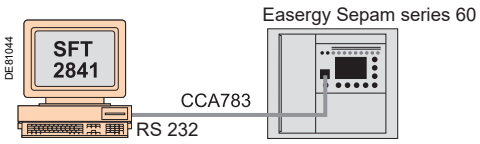

SFT2841 connected to a single Sepam unit with the serial port.

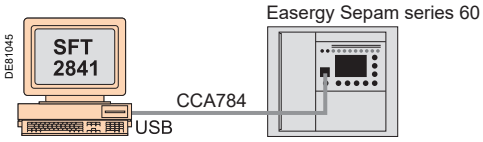

SFT2841 connected to a single Sepam unit with the USB port.

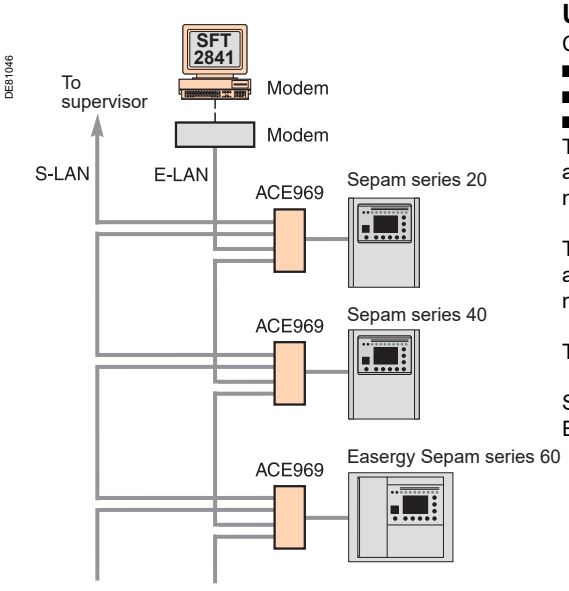

SFT2841 connected to a Sepam network.

Description

The SFT2841 welcome window opens when the program is launched.
It lets you choose the language for the SFT2841 screens, and provides access to the Sepam parameter and protection setting files:
- In disconnected mode, you can open or create a parameter and protection setting file for a Sepam
- When connected to a single Sepam unit, you can access the parameter and protection setting file for the Sepam unit connected to the PC
- When connected to a Sepam network, you can access the parameter and protection setting files for a group of Sepam units connected to the PC via a communication network.

Language of SFT2841 screens

SFT2841 software can be used in English, French or Spanish. The language is selected at the top of the window.

Using SFT2841 in disconnected mode

Disconnected mode allows you to prepare parameters and settings files for Sepam prior to commissioning.
The parameter and protection setting files prepared in disconnected mode will be downloaded later to the Sepam units in connected mode.
- To create a new parameter and protection setting file, click on the icon for the relevant Sepam family.
- To open an existing parameter and protection setting file, click on the icon for the relevant Sepam family.

Using SFT2841 connected to a single Sepam unit

Connected to a single Sepam unit mode is used during commissioning:
- To upload, download and modify Sepam parameters and settings
- To have all the measurements and supporting data available for commissioning.

The PC fitted with the SFT2841 software is connected to the port on the front panel of the Sepam via an RS 232 port using the CCA783 cord or via an USB port using the CCA784 cord.
To open the parameter and protection setting file on the Sepam once it is connected to the PC, click on the icon.

Using SFT2841 connected to a Sepam network

Connected to a Sepam network mode is used during operation:
- To manage the protection system
- To check the status of the power supply
- To diagnose any incident occurring on the power supply.

The PC fitted with the SFT2841 software is connected to a group of Sepam units via a communication network (connection via serial link, telephone line or Ethernet). This network forms the E-LAN engineering network.

The connection window allows configuration of the Sepam network, and provides access to the parameter and protection setting files of the Sepam units on the network.

To open the connection window, click on the icon.

See “Configuration of a Sepam network” page 441 for details of how to configure the E-LAN engineering network from the connection window.

SFT2841 setting and operating software
Presentation

The SFT2841 software is used to set up and operate Sepam units. It operates in the Windows environment (XP or Vista).
All the data used for the same task are grouped in the same screen to facilitate operation. Menus and icons are used for fast, direct access to the data required.

Normal operation
- display of all metering and operation data
- display of alarm messages with the time of appearance (date, hour, min, s, ms)
- display of diagnosis data such as tripping current, number of switchgear operations and cumulative breaking current
- display of all protection and parameter settings
- display of the logic status of inputs, outputs and LEDs.

The SFT2841 software is the solution suited to occasional local operation, for demanding personnel who require fast access to all the information.

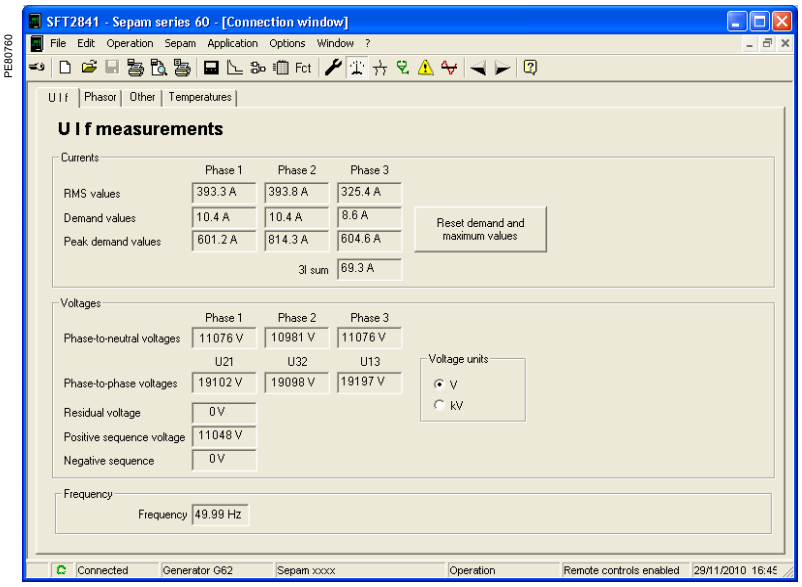

Example of a measurement display screen.

Parameter and protection settings (1)
- display and setting of all the parameters of each protection function on the same page
- set-up of general settings and Sepam data
- set-up of control and monitoring functions
- input data may be prepared ahead of time and transferred into the Sepam in a single operation (loading function).

Main functions performed by SFT2841
- changing of passwords
- entry of general settings (ratings, integration period, …)
- entry of protection settings
- modification of assignments for control and monitoring functions
- enabling/disabling of functions
- entry of mimic-based UMI parameters
- saving of files.

Saving
- protection and parameter setting data may be saved
- printing of reports is possible as well.

The SFT2841 software may also be used to retrieve disturbance recording files and display them using the SFT2826 software tool.

Operating assistance
Access from all screens to a help section containing all the technical information needed to use and commission Sepam.

(1) *Modes accessed via 2 passwords (protection setting level, parameter setting level).*

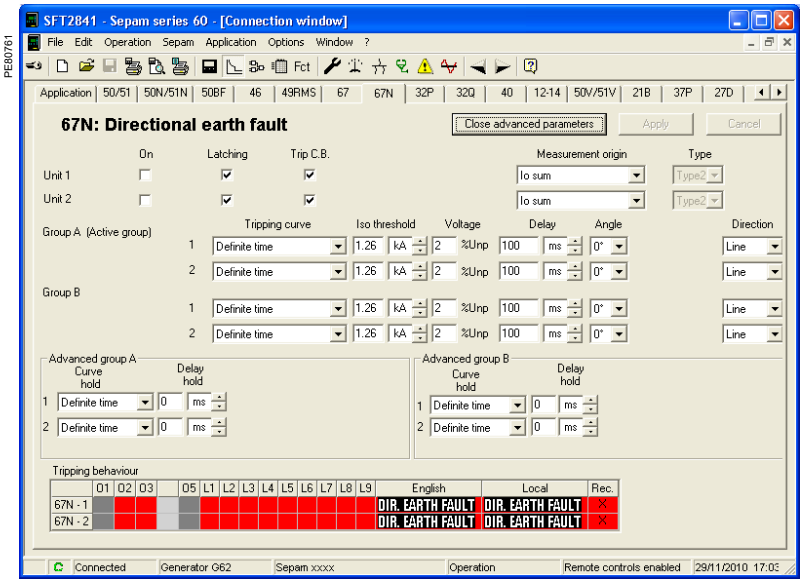

Example of a directional earth fault protection setting screen.

SFT2841 setting and operating software
General screen organization

A Sepam document is displayed on the screen via a graphic interface that has the conventional Windows features.
All the SFT2841 software screens are set up in the same way.
They include:

1 The title bar, with:
- name of the application (SFT2841)
- identification of the Sepam document displayed
- corner symbols for window adjustments

2 The menu bar, for access to all the SFT2841 software functions (unavailable functions are dimmed).

3 The toolbar, a group of contextual icons for quick access to the main functions (also accessed via the menu bar).

4 The work zone available to the user, presented in the form of tab boxes.

5 The status bar, with the following information relating to the active document:
- alarm on
- identification of the connection window
- SFT2841 operating mode, connected or not connected
- type of Sepam
- identification of Sepam edited
- identification level
- Sepam operating mode
- PC date and time.

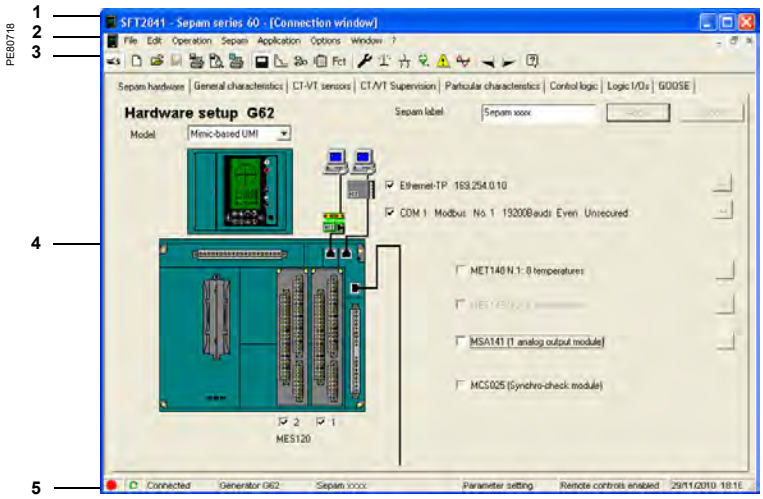

Example of hardware configuration screen.

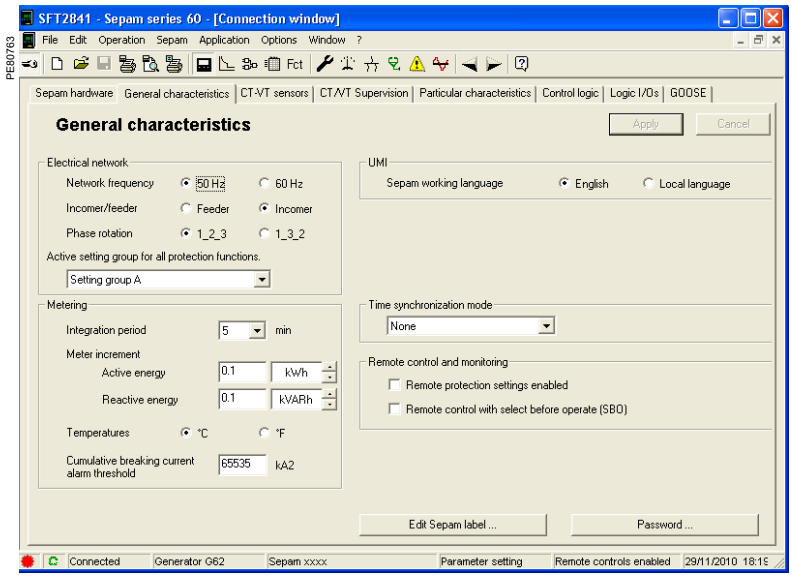

Example of general characteristics screen.

Guided navigation

A guided navigation mode is proposed to make it easier to enter all of the Sepam parameter and protection settings. It guides users through all data input screens in the natural order.
The sequencing of the screens in guided mode is controlled by clicking on 2 icons in the toolbar **3:**
- ◀: to go back to the previous screen
- ▶: to go to the next screen.

The screens are linked up in the following order:

1 Sepam hardware configuration
2 General characteristics
3 CT/VT sensors
4 CT/VT circuit supervision
5 Particular characteristics
6 Control logic
7 Logic input/output assignments
8 Assignment of GOOSE logic inputs
9 Setting screens for the protection functions available, according to the type of Sepam
10 Logic equation editor
11 Various tabs of the control matrix
12 Parameter setting of the disturbance recording function
13 Set-up of the mimic-based UMI

On-line help

The operator may look up on-line help at any time via the "?" command in the menu bar.
Acrobat Reader is required for on-line help. It is provided on the CD.

SFT2841 setting and operating software
General screen organization

Details of the different screens

■ identification: entry of the password gives the user access rights to the parameter and protection setting mode (valid for 5 minutes)

■ selection of a new application from a list of application files with factory settings. The file suffix identifies the application.
e.g.: "appli.G62" is for a Generator 62 application

■ opening of an existing application which, in principle, should be located in the "Sepam" sub-directory of the "SFT2841" directory. A type of application may be selected by choosing the type of file (e.g.: file type *.S60, or *. G62 or *.* to obtain the complete list of files)

■ saving of an application: go to the "Sepam" sub-directory of the "SFT2841" directory, and name the file. The application suffix is updated automatically

■ configuration and complete or partial printing of the current configuration file

■ print preview of the configuration file

■ hard-copy of the current screen

■ Sepam parameter setting:
□ "Sepam hardware" tab: hardware configuration.
□ "General characteristics" tab: setting of the network, remote control and monitoring, password management and Sepam label printing parameter
□ "CT/VT sensors" tab: configuration of current and voltage sensors
□ "CT/VT supervision" tab: implementation and configuration of CT and VT sensor supervision
□ "Particular characteristics" tab:
parameter setting of transformer, motor/generator rotation speed
□ "Control logic" tab: parameter setting of the switchgear control, logic discrimination, genset shutdown, de-excitation, load shedding and restart functions
□ "Logic I/Os" tab: management of logic input and output assignment

■ protection functions:
□ "Application" tab: overview of the protection functions available in the application with graphical view of the single-line diagram. A double click on a protection function label gives quick access to the setting tab
□ 1 tab per protection function: setting of the parameters of each protection function, with a mini-matrix for setting of the outputs, LEDs and disturbance recording

■ creation of logic equations: see description in "Control and monitoring functions" chapter

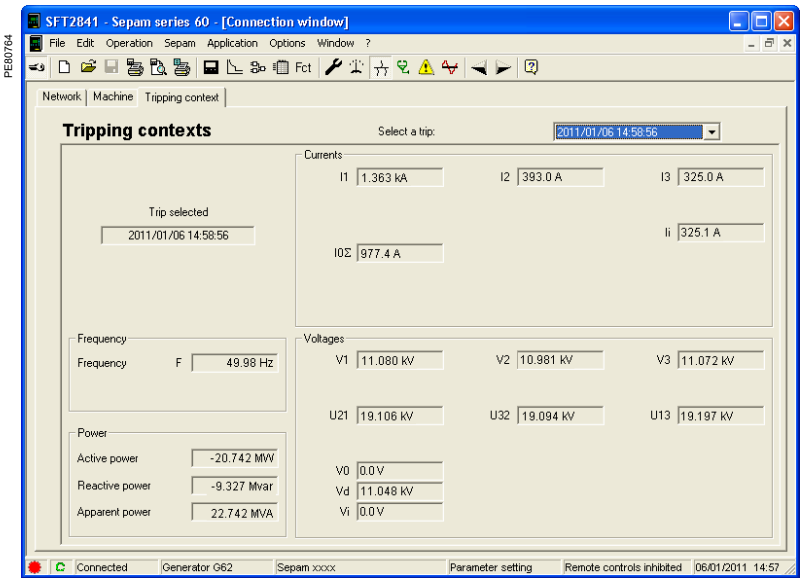

Example of tripping contexts screen.

■ control matrix: used to assign logic outputs, LEDs and messages to information produced by the protection units, logic inputs and logic equations. This function may also be used to create messages. See "Creation of user messages".

■ special functions:
□ "Rec" tab: parameter setting of the disturbance-recording function
□ -based UMI" tab: parameter setting of the mimic-based UMI

■ (1) Sepam diagnosis:
□ "Diagnosis" tab: general characteristics, software version, fault indicator and Sepam time-setting
□ "Input, output and LED status" tab: gives status and proposes an output test
□ "Remote indication status" tab: remote indication status

■ (1) main measurements:
□ "UIF" tab: voltage, current and frequency values
□ "Other" tab: power, energy and rotation speed values
□ "Temperatures" tab

■ (1) diagnosis:
□ "Network" tab: unbalance / negative sequence, V-I phase displacement, number of phase and earth trips and total harmonic distortion values
□ "Machine" tab: running hours counter, impedance and thermal overload values
□ "Tripping context" tab: gives the last 5 tripping contexts

■ (1) switchgear diagnosis: cumulative breaking current, auxiliary voltage and circuit breaker data

■ (1) management of alarms with history and time-tagging

■ (1) disturbance recording: this function is used to record analog signals and logical states. See "Disturbance recording".

■ guided navigation: see previous page

■ on-line help: see previous page

(1) *These icons are only accessible in "connected to Sepam" mode.*

SFT2841 setting and operating software
Use of the software

Disconnected mode

Sepam parameter and protection setting

Sepam parameter and protection setting using SFT2841 consists of preparing the Sepam file containing all the characteristics that are specific to the application, a file that is then loaded into Sepam at the time of commissioning.

NOTICE

RISK OF UNINTENDED OPERATION

■ The device must only be configured and set by qualified personnel, using the results of the installation protection system study.

■ During commissioning of the installation and following any modification, check that the Sepam configuration and protection function settings are consistent with the results of this study.

Failure to follow these instructions can result in equipment damage.

Operating procedure:

1. Create a Sepam file for the type of Sepam to be set up (the newly created file contains the factory settings of the Sepam parameters and protection functions).
2. Modify the Sepam general settings and protection function settings:

■ all the data relating to the same function are grouped together in the same screen

■ it is advisable to enter all the parameters and protection settings in the natural order of the screens proposed by the guided navigation mode.

Entry of parameter and protection settings

■ the parameter and protection setting input fields are suited to the type of value:

□ choice buttons

□ numerical value input fields

□ dialogue box (Combo box)

■ the user must "Apply" or "Cancel" the new values entered before going on to the following screen

■ the consistency of the new values applied is checked:

□ an explicit message identifies inconsistent values and specifies the allowable values

□ values that have become inconsistent following a parameter modification are adjusted to the closest consistent value.

Connected mode

Precaution

When a laptop is used, given the risks inherent to the accumulation of static electricity, the customary precaution consists of discharging in contact with an earthed metal frame before physically connecting the CCA783 cord.

Note : *If you are unable to connect to Sepam, check that the SFT2841 software version used is actually compatible with your Sepam. See "Compatibility of Sepam version/SFT2841 version" on page 473.*

Plugging into Sepam

■ plugging of the 9-pin connector (SUB-D type) into one of the PC communication ports.

Configuration of the PC communication port via the "Communication port" function in the "Options" menu.

Connection to a USB port on the PC is possible using the CCA784 cable.

■ plugging of the 6-pin connector into the connector (round MiniDin type) situated behind the blanking plate on the front panel of Sepam or the DSM303 module.

Connection to Sepam

2 possibilities for setting up the connection between SFT2841 and Sepam:

■ "Connection" function in the "File" menu

■ choice of "connect to the Sepam" at the start-up of SFT2841.

Once the connection with Sepam has been established, "Connected" appears in the status bar, and the Sepam connection window may be accessed in the work zone.

User identification

The window intended for the entry of the 4-digit password is activated:

■ via the "General characteristics" tab, "Passwords" button…

■ via the "Identification" function in the "Sepam" menu.

The "Return to Operating mode" function in the "Passwords" tab withdraws access rights to the parameter and protection setting mode.

Loading of parameters and protection settings

Parameter and protection setting files may only be loaded in the connected Sepam in Parameter setting mode.

Once the connection has been established, the procedure for loading a parameter and protection setting file is as follows:

1. Activate the "Load Sepam" function in the "Sepam" menu
2. Select the file (*.S60, *.S62, *.T60, *.T62, *.M61, *.G60, *.G62, *.C60, according to the type of application) which contains the data to be loaded.

Return to factory settings

This operation is only possible in Parameter setting mode, via the "Sepam" menu. All of the Sepam general settings, protection settings and the control matrix go back to the default values.

The return to factory settings does not erase the logic equations.

The logic equation editor must be used to delete them.

Unloading of parameter and protection settings

The connected Sepam parameter and protection setting file may only be unloaded in Operating mode.

Once the connection has been established, the procedure for unloading a parameter and protection setting file is as follows:

1. Activate the "Unload Sepam" function in the "Sepam" menu
2. Select the *.rpg file that is to contain the unloaded data
3. Acknowledge the end of operation report.

Local operation of Sepam

Connected to Sepam, SFT2841 offers all the local operating functions available in the advanced UMI screen, plus the following functions:

■ setting of Sepam's internal clock, via the "Sepam diagnosis" tab

■ implementation of the disturbance recording function: enabling/disabling of the function, retrieval of Sepam files, start-up of Wavewin-SE

■ consultation of the history of the last 250 Sepam alarms, with time-tagging

■ access to Sepam diagnostic data, in the "Sepam" tab box, included in "Sepam diagnosis"

■ in Parameter setting mode, switchgear diagnosis values may be modified: operation counter and cumulative breaking current to reset the values after a breaking device is changed.

SFT2841 setting and operating software
Creation of user messages

This operation is carried out using the control matrix ( icon or "Application / Set control matrix" menu).
When the matrix is displayed, select the "Events" tab, double-click on the empty box of the message to be created, or on an existing message to modify it.
A new screen may be used to:

■ create a new user message:
click on the "Create messages" button

■ modify the message you have created or an existing user message:

1. Select the message number in the "No." column.
2. Click on the "Modify" button.
3. An editing or bitmap window may be used to create text or drawings.

■ assign the message to the line in the control matrix:

1. Select "message" if it has not already been selected.
2. Select the new predefined or user message in the corresponding "No." column.
3. Click on "Assign".
4. Confirm your choice by clicking on the "OK" button.

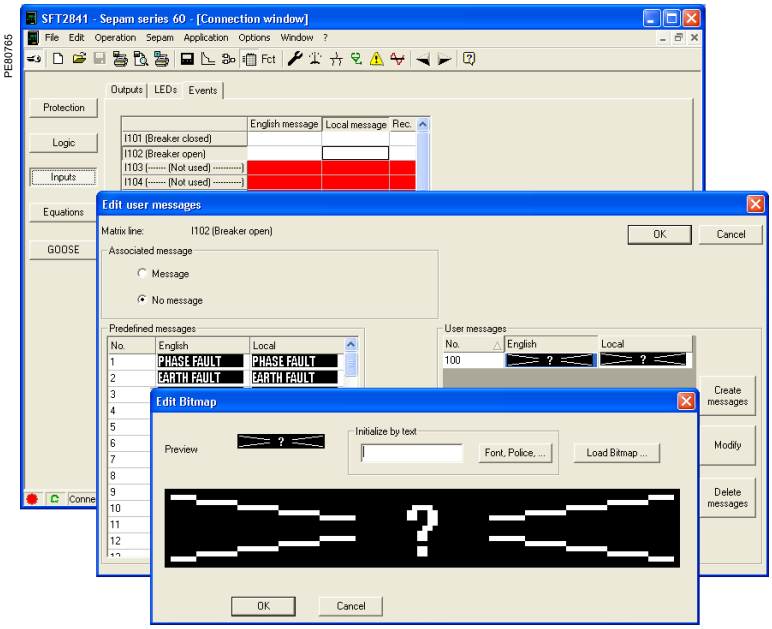

Example of message creation screen.

SFT2841 setting and operating software
Disturbance recording

Disturbance recording is configured from the Fct icon.

1. Check the "On" option.
2. Set:
- the recording number
- the duration of each recording
- the number of samples stored per period
- the number of Pretrig periods (number of periods stored before the event triggering disturbance recording).

3. Then draw up the list of logic I/O that need to appear in the disturbance recording.

If one of the parameters is modified: recording number, recording duration, number of Pretrig periods, all the recordings already made will be deleted (warning message displayed).

A change in the list of logic I/O does not affect existing recordings.

4. Click on the "Apply" button.

The Disturbance recording function is operated from the icon, then via the Disturbance recording tab. Each recording is identified in the list by its date.

Manual disturbance recording: click on the "New recording" button: this causes a new time-tagged item to appear in the list.

Viewing a recording

Select one or more disturbance recordings then click on .

The "Start Record Viewer" button is used to launch the viewing software (compatible with the COMTRADE format) in order to read the selected files.

DE81230

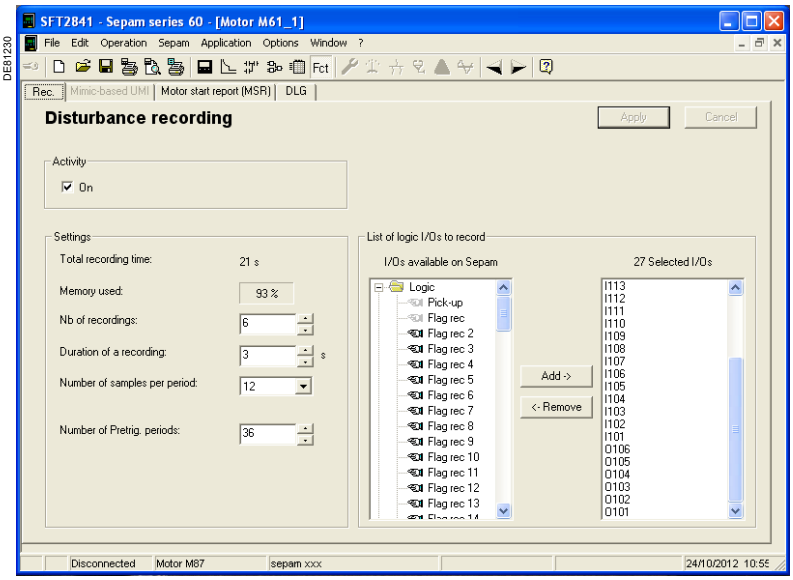

Example of disturbance recording configuration screen.

DE81231

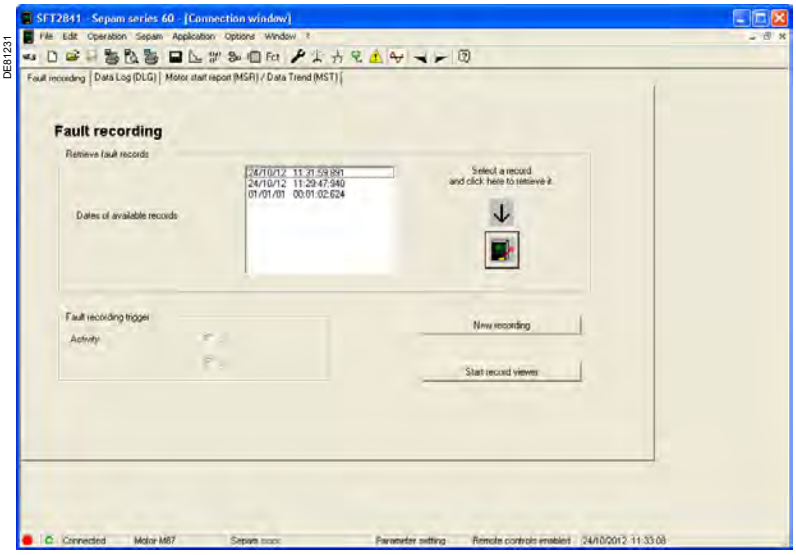

Example of disturbance recording display screen.

SFT2841 setting and operating software
Implementing the Motor start report and trend functions

The Motor start report (MSR) function is configured from the Fct icon .

1. Check the "On" option.
2. Set:
- ■ the trip confirmation (optional)
- □ circuit breaker
- □ protection 48/51
- ■ the duration of a recording, either using a duration expressed in seconds, or using the sampling frequency

3. Then draw up the list of variables that need to appear in the Motor start report (up to 5 variables in the case of a normal cartridge and up to 10 variables in the case of an extended cartridge).

The outlined parameters in the figure opposite are deemed to be critical. If one of these parameters is modified, all the recordings already made will be deleted (warning message displayed).

The critical parameters are as follows:
- ■ recording duration in seconds
- ■ sampling frequency
- ■ selected point list

4. Click on the "Apply" button.

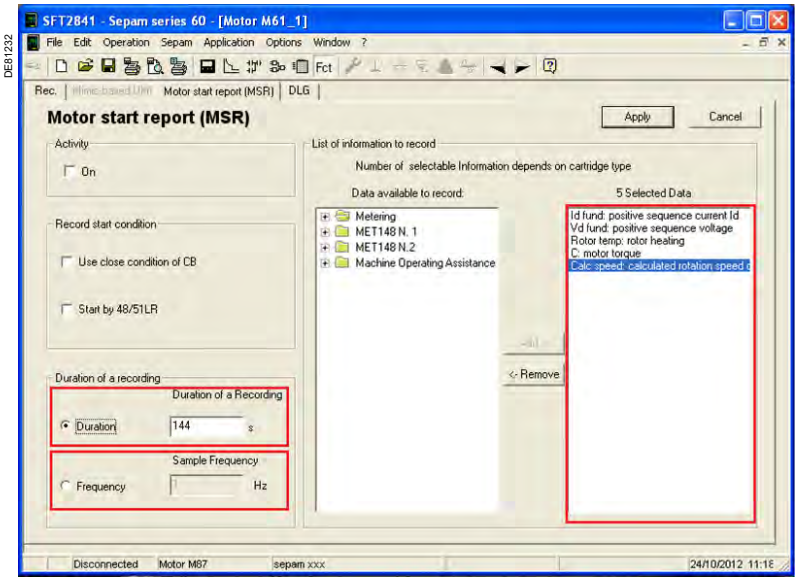

Example of a Motor start report configuration screen.

The Motor start report (MSR) and Motor start trend (MST) functions are operated from the icon then via the "MSR and MST" tab.

An MST is created when the 1st MSR in a 30-day period ends.

Downloading / Viewing files

Each recording is identified in the list by its creation date. The MSR and MST files are sorted from the most recent to the oldest.

Select one or more MSR and/or MST files then click on .

For each Data log file, a binary file in COMTRADE format is downloaded.

The "Start Record Viewer" button is used to launch the viewing software (compatible with the COMTRADE format) in order to read the selected files.

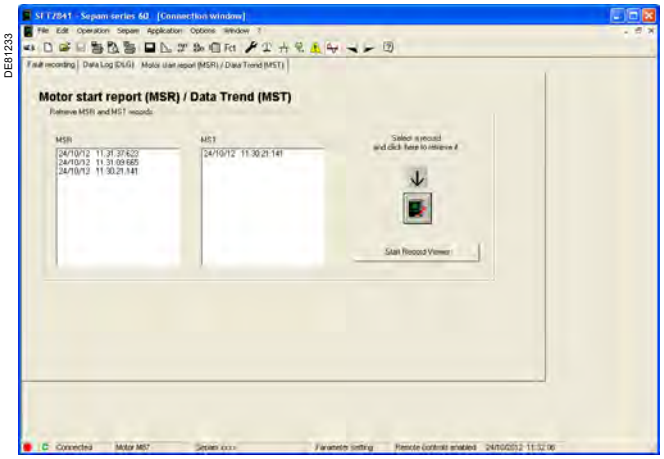

Example of a Motor start report and trend (MSR and MST) runtime screen.

Characteristics of MSR and MST functions depending on the type of cartridge used

	Maximum number of selectable variables	Maximum number of MSR files	Maximum number of MST files
Standard cartridge	5	5	12
Extended cartridge	10	20	18

SFT2841 setting and operating software
Mise en œuvre de la fonction Enregistrement de données (DLG)

The Data log (DLG) function is configured from the Fct icon .

1. Select the tripping source from the following values:
- Logic equation
- SFT2841 (by default)
- Remote control order
- Logic or GOOSE input

2. Select the type of recording:
- Circular
- Limited

3. Select:
- the total number of files
- the duration common to each file
- the sampling frequency.

The outlined parameters in the figure opposite are deemed to be critical. If one of the parameters is modified, all the recordings already made will be deleted (warning message displayed).

The critical parameters are as follows:
- type of recording
- total number of files
- file duration
- sampling frequency
- selected point list

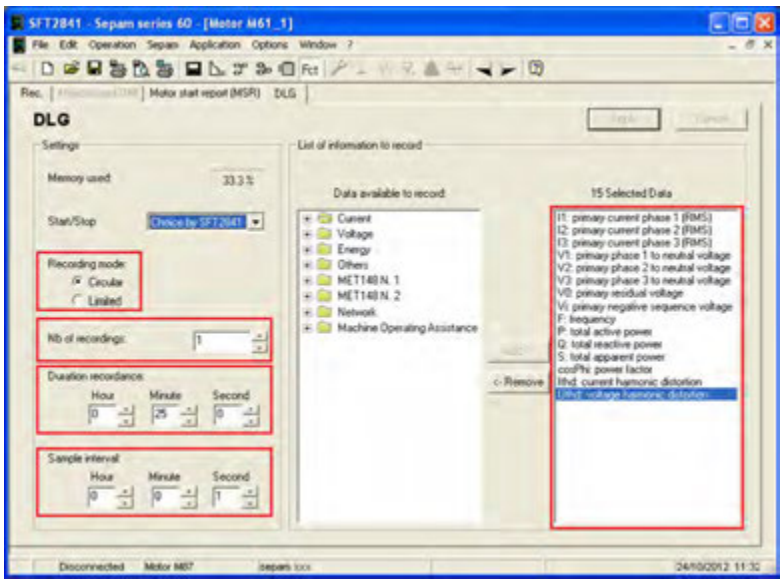

Example of Data log configuration screen.

The Data log (DLG) function is operated from the icon then via the "Data log" tab.

This screen is dual-purpose. It can be used to:
- download/view one or more available Data log files
- trigger recording of Data log files.

Downloading / Viewing files

Each recording is identified in the list by its creation date. The DLG files are sorted from the most recent to the oldest.

Select one or more DLG files then click on .

For each Data log, a binary file in COMTRADE format is downloaded.

The "Start Record Viewer" button is used to launch the viewing software (compatible with the COMTRADE format) in order to read the selected files.

Triggering a Data log

Provided that the SFT2841 software has been configured as a tripping source in the configuration screen, it is possible to start and stop a Data log by clicking on the "Start" and "Stop" buttons in the Data log runtime screen.

In the case of a Data log in "Limited" mode, the "Stop" button can be used to stop a recording prematurely.

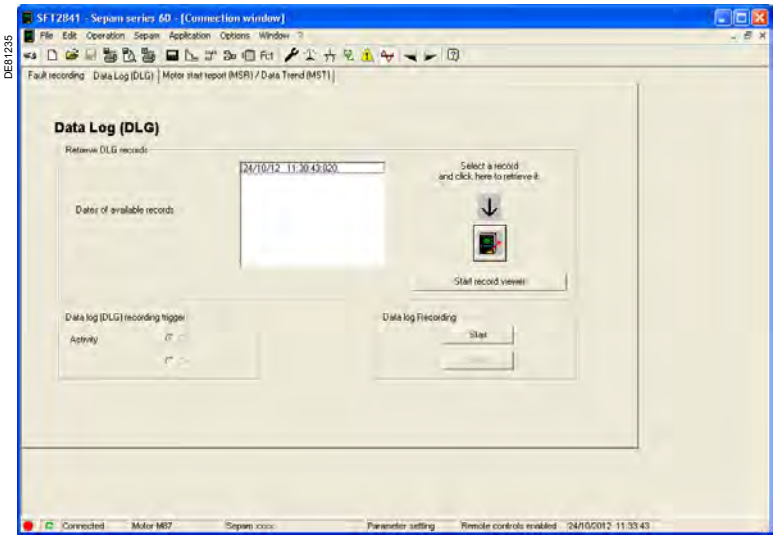

Example of Data log runtime screen.

7

SFT2841 setting and operating software
Logic-equation editing

PE80768

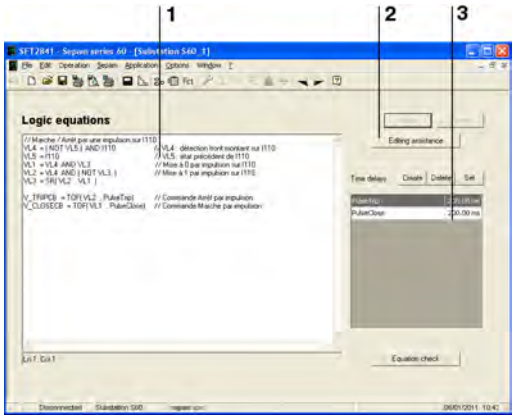

Logic-equation editor screen.

PE50427

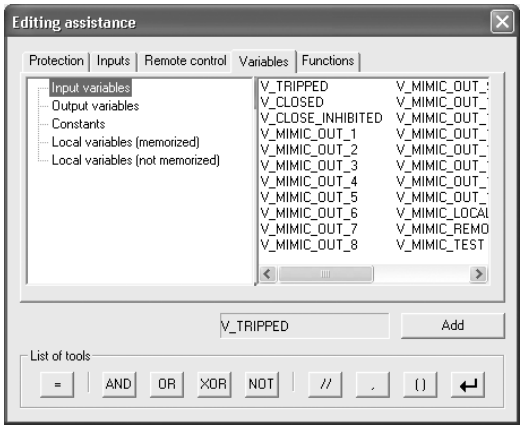

Editing assistance tool.

PE50428

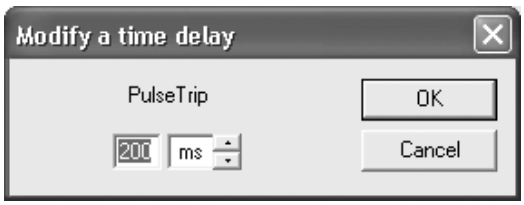

Time delay editor.

Presentation

Logic-equation editing consists of:
- entry and checks on logic equations
- setting the delays used in the logic equations
- loading the logic equations in Sepam.

The logic-equation editor of the SFT2841 software is accessed via the icon.

The logic-equation editor includes:
1 a zone to enter and display the logic equations
2 an editing assistance tool
3 a tool for setting time delays.

Entry of logic equations

The syntax required for logic equations is presented in the "Control and monitoring functions" chapter.
Logic equations are entered in text:
- directly in the equation entry zone
- or using the editing assistance tool.

The editing assistance tool offers guided access to variables, operators and functions. Via the tab sheets and tree structures, the user can select program elements and then click the "Add" button. The selected element is placed in the entry zone.

Check on the logic equations

The syntax of logic equations can be checked by clicking:
- the "Equation check" button during entry of logic equations
- the "Apply" button during final confirmation of the logic equations entered.

An error message is displayed if the check detects an error. The message indicates the type of error and the line containing the error.

Setting time delays

Time delays can be entered directly in a logic equation.
Example: V1= TON(VL1, 100), "On" time delay, set to delay the shift to 1 of variable VL1 by 100 ms.

To improve equation legibility and facilitate time delay settings, it is preferable to use the time delay editor to:
- create a time delay, indicating its duration and name (used in writing the logic equation)
- delete a time delay
- adjust a time delay by modifying its duration without having to make changes in the equation entry zone
- display the list of delays used in the logic equations, with their names and durations.

Example:
Create SwitchOnDelay with a duration of 100 ms.
In the entry zone, use the time delay: V1=TON(VL1, SwitchOnDelay).

Load the logic equations in Sepam

Logic equations are transferred to Sepam in connected mode:
- directly by clicking the "Apply" button
- when a configuration file containing logic equations entered in disconnected mode is loaded.

In both cases, loading results in a short interruption in Sepam operation and automatic restart at the end of loading.

SFT2841 setting and operating software
Default settings

The default settings (or factory settings) are present in Sepam the first time it is used. It is possible to go back to the Sepam default settings at any time by using the "Factory settings" function in the SFT2841 software. These settings are also used to initialize the SFT2841 software setting files.

Parameter	Default value
Hardware configuration	
Model	Integrated UMI
Identification	Sepam xxx
COM1, Ethernet	Off
MET148-2 No. 1, 2	Off
MSA141	Off
MES120 No. 1, 2	Off
MCS025	Off
General characteristics	
Frequency	50 Hz
Incomer/feeder	S60, S62, M61, C60 applications: feeder G60, G62, T60, T62 applications: incomer
Phase rotation direction	1_2_3
Group of settings	Group A
Remote protection setting enabled	Off
Remote control with select before operate (SBO)	Off
Integration period	5 min
Active-energy increment	0.1 kWh
Reactive-energy increment	0.1 kVAR.h
Temperature	°C
Sepam working language	English
Time synchronization mode	None
Protection setting password	0000
Parameter setting password	0000
Cumulative breaking current alarm threshold	65535 kA²
CT-VT sensors	
Single-line type	1
I - CT rating	5 A
I - Number of CTs	I1, I2, I3
I – Rated current (In)	630 A
I - Base current (Ib)	630 A
I0 – Residual current	None
V – Number of VTs	V1, V2, V3
V - Rated primary voltage (Unp)	20 kV
V - Rated secondary voltage (Uns)	100 V
V0 - Residual voltage	3V sum
Vnt - Neutral point voltage	None
Particular characteristics	
Rated voltage Un1	20 kV
Rated voltage Un2	20 kV
Rated power	30 MVA
Vector shift	0
Rated speed	3000 rpm
Zero speed threshold	5 %
Number of capacitor steps	1

SFT2841 setting and operating software
Default settings

Parameter	Default value
Control logic	
Switchgear control	On, circuit breaker
Logic discrimination	Off
Genset shutdown	Off
De-excitation	Off
Load shedding	Off
Restart	Off
Automatic transfer	Off
Logic I/O assignment	
O1, O3	On, NO, permanent
O2, O5	On, NC, permanent
Protection	
Activity	All protection functions are "off"
Latching	21B, 27D, 32P, 32Q, 38/49T, 40, 46, 48/51LR, 49RMS, 50BF, 50/51, 50N/51N, 50V/51V, 64REF, 67, 67N
Participation in switchgear control	21B, 32P, 32Q, 37, 38/49T, 40, 46, 48/51LR, 49RMS, 50/51, 50N/51N, 50V/51V, 64REF, 67, 67N
Genset shutdown	12, 40, 50/51 (units 6, 7), 50N/51N (units 6, 7), 59N, 64REF, 67, 67N
De-excitation	12, 40, 50/51 (units 6, 7), 50N/51N (units 6, 7), 59N, 64REF, 67, 67N
Setting	Approximate values consistent with general characteristics by default
Matrix	
LED	According to front panel marking
Disturbance recording	Pick-up All protection functions except for 14, 27R, 38/49T, 48/51LR, 49RMS, 50BF, 51C, 66
Logic outputs	O1: tripping O2: inhibit closing O3: closing O5: watchdog
Disturbance recording	
Activity	On
Number of recordings	6
Duration of a recording	3
Number of samples per period	12
Number of Pretrig periods	36

SFT2841 setting and operating software
Configuration of a Sepam network

Connection window

The SFT2841 software connection window is used:
- To select an existing Sepam network or configure a new one
- To set up the connection to the selected Sepam network
- To select one Sepam unit from the network and access its parameters, settings, and operation and maintenance information.

Configuration of a Sepam network

Several configurations can be defined for the various Sepam installations.
A Sepam network configuration is identified by a name. It is saved on the SFT2841 PC in a file in the SFT2841 installation directory (default: C:\Program Files\Schneider\SFT2841\Net).

Configuration of a Sepam network is in 2 parts:
- Configuration of the communication network
- Configuration of the Sepam units.

Configuration of the communication network

To configure the communication network, first define:
- The type of link between the PC and the Sepam network
- The communication parameters, according to the type of link selected:
  - direct serial link
  - link via Ethernet TCP/IP
  - link via telephone modem.

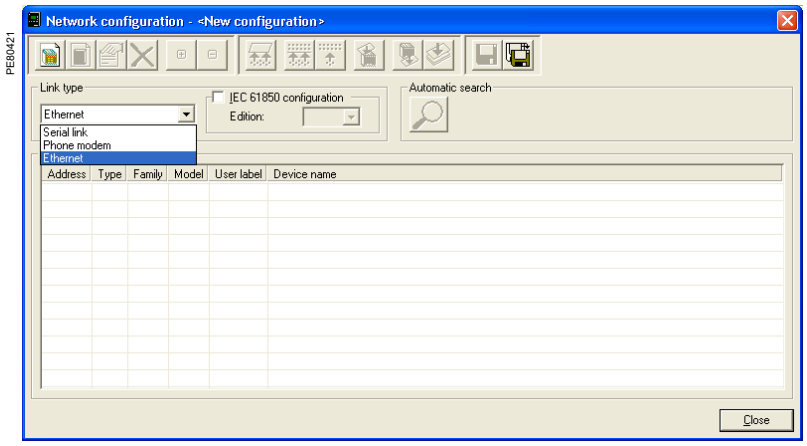

Configuration windows for the communication network, according to the type of link: serial link, modem link (STN) or Ethernet link (TCP).

SFT2841 setting and operating software
Configuration of a Sepam network

PE80422

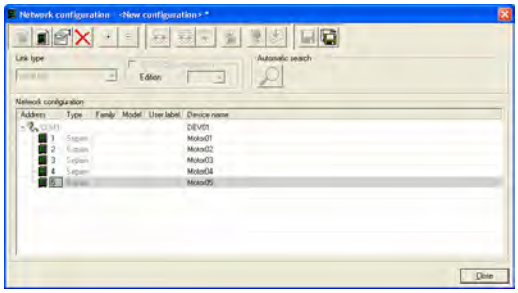

Configuration window for the serial link communication network.

Direct serial link

The Sepam units are connected to an RS 485 (or fiber-optic) multidrop network. Depending on the serial link interfaces available on the PC, the PC itself will be connected either directly to the RS 485 network (or fiber-optic HUB), or via an RS 232/RS 485 converter (or fiber-optic converter).

The communication parameters to be defined are:
- port: communication port used on the PC
- speed: 4800, 9600, 19200 or 38400 bauds
- parity: None, Even or Odd
- handshake: None, RTS or RTS-CTS
- time-out: from 100 to 3000 ms
- number of retries: from 1 to 6.

PE80423

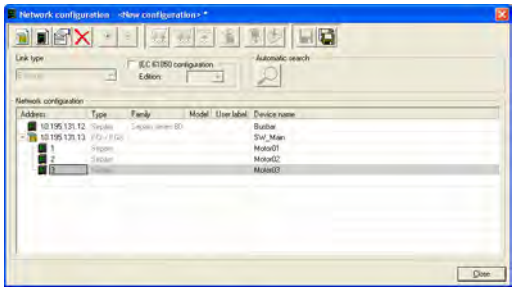

Configuration window for the Ethernet TCP/IP communication network.

Link via Ethernet TCP/IP

The ACE850 communication interface can be used to connect a Sepam series 40, Easergy Sepam series 60 or series 80 unit directly to an Ethernet network.
All the Sepam units can also be connected to an RS 485 multidrop network over one or more Ethernet Modbus TCP/IP gateways (for example: EGX gateways or ECI850 servers that act as Modbus TCP/IP gateways for the link with the SFT2841 software).

Use on an IEC 61850 network

SFT2841 can be used on an IEC 61850 network. In this case, it can be used to define the IEC 61850 configuration of Sepams connected to this network. See the Sepam IEC 61850 Communication user's manual (reference SEPED306024EN) for more information.

Configuration of the Modbus TCP/IP gateway

See the setup manual for the gateway used.
In general, the gateway should be assigned an IP address.
The configuration parameters for the gateway's RS 485 interface must be defined in accordance with the Sepam communication interface configuration:
- speed: 4800, 9600, 19200 or 38400 bauds
- character format: 8 data bits + 1 stop bit + parity (none, even, odd).

Configuration of communication on SFT2841

When configuring a Sepam network on SFT2841, the following communication parameters must be defined:
- type of device: Modbus gateway, ECI850 or Sepam
- IP address: IP address for the connected remote equipment
- time-out: from 100 to 3000 ms.

A time-out of between 800 ms and 1000 ms is sufficient in most installations.
Communication via the TCP/IP gateway may, however, be slowed down if other applications want Modbus TCP/IP or IEC 61850 access at the same time.
The time-out value should then be increased (2 to 3 seconds).
- number of retries: from 1 to 6.

Note 1: *SFT2841 uses the Modbus TCP/IP communication protocol.*
Although communication is IP-based, use of SFT2841 is restricted to a local installation network based on an Ethernet network (LAN – Local Area Network).
The operation of SFT2841 over a WAN (Wide Area Network) cannot be guaranteed because of the presence of some routers or firewalls that may reject the Modbus protocol, causing communication times that would be incompatible with Sepam.

Note 2: *SFT2841 allows Sepam protection settings to be modified, and direct activation of the outputs. These operations, which could involve the operation of electrical switchgear (opening and closing), and thus risk the safety of people and installations, are protected by the Sepam password. In addition to this protection, the E-LANs and S-LANs must be designed as private networks, protected from external actions by all suitable methods.*

SFT2841 setting and operating software
Configuration of a Sepam network

PE80424

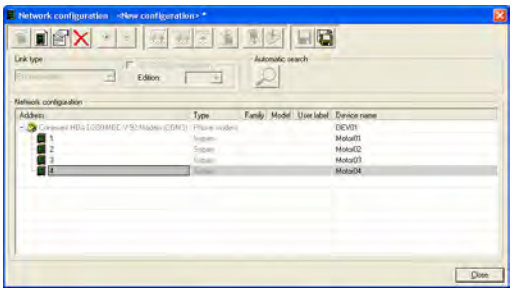

Configuration window for the communication network via telephone modem.

Link via telephone modem

The Sepam units are connected to an RS 485 multidrop network using an industrial STN modem.
This modem is the called modem. It must first be configured, either via AT commands from a PC using HyperTerminal or the configuration tool that may have been supplied with the modem, or by setting switches (see the modem manufacturer's manual).

The PC may use an internal or an external modem. This modem on the PC side is always the calling modem. It must be installed and configured in accordance with the Windows modem installation procedure.

Configuration of the calling modem in SFT2841

When configuring a Sepam network, SFT2841 displays the list of all the modems installed on the PC.
The communication parameters to be defined are:
- modem: select one of the modems listed by SFT2841
- telephone no.: no. of the remote modem to be called
- speed: 4800, 9600, 19200 or 38400 bauds
- parity: none (not adjustable)
- handshake: none, RTS or RTS-CTS
- time-out: from 100 to 3000 ms.

Communication via modem and telephone network is slowed considerably because of the transit time through the modems. A time-out of between 800 ms and 1000 ms is sufficient in most 38400 baud installations. In some cases, the poor quality of the telephone network may require a slower speed (9600 or 4800 bauds). The time-out value should then be increased (2 to 3 seconds).
- number of retries: from 1 to 6.

Note: *the speed and parity of the calling modem must be configured under Windows with the same values as for SFT2841.*

SFT2841 setting and operating software
Configuration of a Sepam network

PE80424

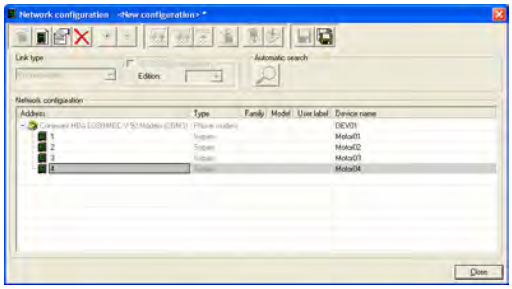

Configuration window for the communication network via telephone modem.

Configuration of called modem

The modem on the Sepam side is the called modem. It must first be configured, either via AT commands from a PC using HyperTerminal or the configuration tool that may have been supplied with the modem, or by setting switches (see the modem manufacturer's manual).

Modem RS 485 interface

In general, the configuration parameters for the modem's RS 485 interface must be defined in accordance with the Sepam communication interface configuration:

- speed: 4800, 9600, 19200 or 38400 bauds
- character format: 8 data bits + 1 stop bit + parity (none, even, odd).

Telephone network interface

Modern modems offer sophisticated features such as checking the quality of the telephone line, error correction and data compression. These options are not appropriate for communication between SFT2841 and Sepam, which is based on the Modbus RTU protocol. Their effect on communication performance may be the opposite of the expected result.

It is therefore highly advisable to:

- Invalidate the error correction, data compression and telephone line quality monitoring options
- Use the same end-to-end communication speed between:
  - the Sepam network and the called modem
  - the called modem (Sepam side) and the calling modem (PC side)
  - the PC and the calling modem (see recommended configurations table).

Sepam network	Telephone network	PC modem interface
38400 bauds	V34 modulation, 33600 bauds	38400 bauds
19200 bauds	V34 modulation, 19200 bauds	19200 bauds
9600 bauds	V32 modulation, 9600 bauds	9600 bauds

Industrial configuration profile

The following table shows the main characteristics of the modem on the Sepam side. These characteristics match a configuration profile commonly known as an "industrial profile", as opposed to the configuration of modems used in offices.

Depending on the type of modem used, the configuration will either be via AT commands from a PC using HyperTerminal or the configuration tool that may have been supplied with the modem, or by setting switches (see the modem manufacturer's manual).

Characteristics of the "industrial profile" configuration	AT command
Transmission in buffered mode, without error correction	\N0 (force &Q6)
Data compression deactivated	%C0
Line quality monitoring deactivated	%E0
DTR signal assumed to be permanently off (allows the modem connection to be established automatically on an incoming call)	&D0
CD signal off when carrier is present	&C1
All reports made to Sepam blocked	Q1
Character echo suppression	E0
No flow control	&K0

SFT2841 setting and operating software
Configuration of a Sepam network

PE80425

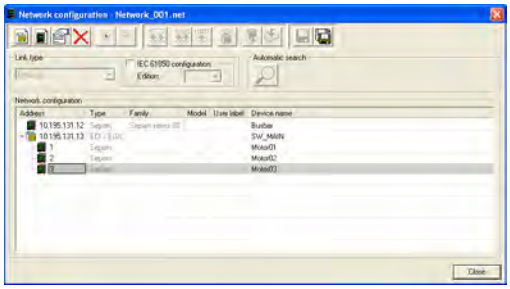

Sepam network connected to SFT2841.

PE80769

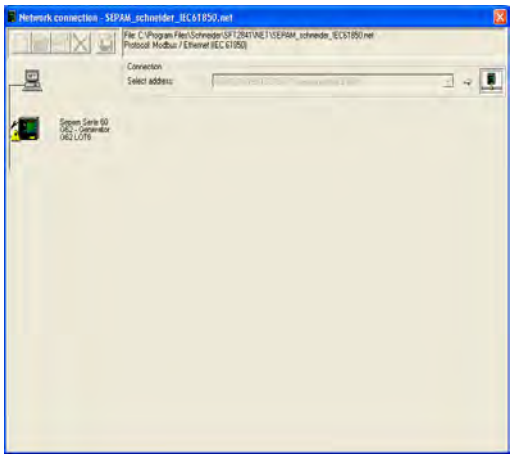

Access to parameters and settings for a Easergy Sepam series 60 connected to a communication network.

Identification of Sepam units connected to the communication network

The Sepam units connected to the communication network are identified by either:
- Their Modbus address
- Their IP address
- The IP address for their gateway and their Modbus address

These addresses can be configured in either of the following ways:
- Manually, one by one:
  - the "Add" button is used to define a new device
  - the "Edit" button is used to modify the Modbus address if necessary
  - the "Delete" button removes a device from the configuration
- Or automatically for Modbus addresses, by running an automatic search of the Sepam units connected:
  - the "Automatic search"/"Stop search" button starts or interrupts the search
  - when SFT2841 recognizes a Sepam unit, its Modbus address and type are shown on screen
  - when a Modbus device other than Sepam responds to SFT2841, its Modbus address is displayed. The text "???" indicates that the device is not a Sepam.

The Sepam network configuration is saved in a file when the UMI window closes, by pressing the "OK" button.

Access to Sepam information

To establish communication between SFT2841 and a Sepam network, select the Sepam network configuration you want, select the device connected to the TCP/IP network and press "Connect".
The Sepam network is displayed in the connection window. SFT2841 polls all the equipment defined in the selected configuration. Each Sepam queried is represented by an icon:
-  Sepam series 20 or Sepam series 40 actually connected to the network
-  Easergy Sepam series 60 or series 80 actually connected to the network
-  Sepam configured but not connected to the network
-  Device other than Sepam connected to the network.

A summary report of each Sepam detected as present is also displayed:
- Sepam Modbus address
- Type of application and Sepam identification
- Any alarms present
- Any minor/major faults present.

To access parameters, settings and operation and maintenance information for a particular Sepam, click on the icon for that Sepam. SFT2841 then establishes a point-to-point connection with the selected Sepam.

7

SFT2841 software
Mimic-diagram editor
Presentation

Description

SFT2841 Sepam setting and operating software includes a mimic-diagram editor that can be used to personalize the mimic diagram for local control on the mimic-based UMI of Easergy Sepam series 60 or Easergy Sepam series 80 units.
A mimic-diagram or single-line diagram is a simplified diagram of an electrical installation. It is made up of a fixed background on which symbols and measurements are placed.

The mimic-diagram editor can be used to:
- create a fixed, bitmap background (128 x 240 pixels) using standard drawing software
- create animated symbols or use predefined animated symbols to represent the electrotechnical devices or other objects
- assign the logic inputs or internal status conditions that modify the animated symbols. For example, the logic inputs for the circuit-breaker position must be assigned to the circuit-breaker symbol to enable the display of the open and closed conditions
- assign the logic outputs or internal status conditions that are activated when an opening or closing order are issued for the symbol
- display the current, voltage and power measurements on the mimic diagram.

Mimic-diagram and symbols

The symbols making up the mimic-diagram constitute the interface between the mimic-based UMI and the other Sepam control functions.
There are three types of symbols:
- Fixed symbol: represents the electrotechnical devices that are neither animated or controlled, e.g. a transformer
- Animated symbol with one or two inputs: represents the electrotechnical devices that change on the mimic diagram, depending on the symbol inputs, but cannot be controlled via the Sepam mimic-based UMI.
This type of symbol is used for switch-disconnectors without remote control, for example.
- Controlled symbol with one or two inputs/outputs: represents the electrotechnical devices that change on the mimic diagram, depending on the symbol inputs, and can be controlled via the Sepam mimic-based UMI.
This type of symbol is used for circuit breakers, for example.
The symbol outputs are used to control the electrotechnical device:
  - directly via the Sepam logic outputs
  - by the switchgear control function
  - by logic equations.

Local control using a symbol

"Controlled - 1 input/output" and "Controlled - 2 inputs/outputs" symbols are used to control the switchgear corresponding to the symbol via the Sepam mimic-based UMI.

Control symbols with two outputs
"Controlled - 2 inputs/outputs" symbols have two control outputs for opening and closing of the symbolized device.
An order on the mimic-based UMI sends a 300 ms pulse on the controlled output.

Control symbols with one output
"Controlled - 1 input/output" symbols have one control output. The output remains in the last state to which it was ordered.
A new order results in a change in the output state.

Inhibition of orders
"Controlled - 1 input/output" and "Controlled - 2 inputs/outputs" symbols have two inhibition inputs that, when set to 1, block opening and closing orders. This makes it possible to create interlocking systems or other order-disabling systems that are taken into account by the UMI.

SFT2841 software
Mimic-diagram editor
Presentation

Symbol animation

Depending on the value of their inputs, symbols change. A graphic representation corresponds to each state. Animation is carried out automatically by changing the symbol each time the state changes.
The symbol inputs must be assigned directly to the Sepam inputs indicating the position of the symbolized switchgear.

Animated symbols with two inputs

"Animated - 2 inputs" and "Controlled - 2 inputs/outputs" symbols are animated symbols with two inputs, one open and the other closed.
This is the most common situation in representing switchgear positions.
The symbol has three states, i.e. three graphic representations: open, closed and unknown.
The latter is obtained when the inputs are not matched, in which case it is impossible to determine the position of the switchgear.

Symbol inputs	Symbol state	Graphic representation (example)
Input 1 (open) = 1 Input 2 (closed) = 0	Open	
Input 1 (open) = 0 Input 2 (closed) = 1	Closed	
Input 1 (open) = 0 Input 2 (closed) = 0	Unknown	
Input 1 (open) = 1 Input 2 (closed) = 1	Unknown	

Animated symbols with one input

"Animated -1 input" and "Controlled -1 input/output" symbols are animated symbols with one input. The value of the input determines the state of the symbol:
- input set to 0 = inactive
- input set to 1 = active

This type of symbol is used for simple presentation of information, for example the racked out position of a circuit breaker.

Symbol inputs	Symbol state	Graphic representation (example)
Input = 0	Inactive	
Input = 1	Active	

Symbol inputs/outputs

Depending on the desired operation of the mimic-based UMI, Sepam variables must be assigned to the inputs of animated symbols and the inputs/outputs of controlled symbols.

Sepam variables assigned to symbol inputs

Sepam variables		Name	Use
Logic inputs		Ixxx	Symbol animation directly based on device positions
Outputs of predefined functions	Switchgear control	V_CLOSE_INHIBITED	Circuit-breaker operation disabled
	Position of key on the front panel of Sepam	V_MIMIC_LOCAL, V_MIMIC_REMOTE, V_MIMIC_TEST	■ Representation of key position ■ Operation disabled depending on the control mode
	Logic equations	V_MIMIC_IN_1 to V_MIMIC_IN_16	■ Representation of Sepam internal status conditions ■ Cases where operation is disabled

Sepam variables to be assigned to symbol outputs

Sepam variables		Name	Use
Logic outputs		Oxxx	Direct control of devices
Inputs of predefined functions	Switchgear control	V_MIMIC_CLOSE_CB V_MIMIC_OPEN_CB	Circuit-breaker control using the switchgear-control function via the mimic-based UMI
	Logic equations	V_MIMIC_OUT1 to V_MIMIC_OUT16	Order processing by logic functions: interlocking, order sequence, etc.

SFT2841 software
Mimic-diagram editor
General screen organization

Main screen of the mimic-diagram editor

The main screen of the mimic-diagram editor is, by default, organized as presented below.

1 The title bar, with:
- the name of the application
- identification of the document
- handles for window adjustments

2 The menu bar for access to all functions

3 The main toolbar, a group of contextual icons for quick access to the main functions

4 The mimic-diagram explorer, with the list of symbols and measurements in the current mimic diagram.
A toolbar specific to this zone.

5 A drawing zone showing the diagram displayed on the mimic-based UMI.
This is the work zone where the user can place symbols and measurements.

6 The symbol library containing the symbols used in the mimic diagram.
A toolbar specific to this zone.

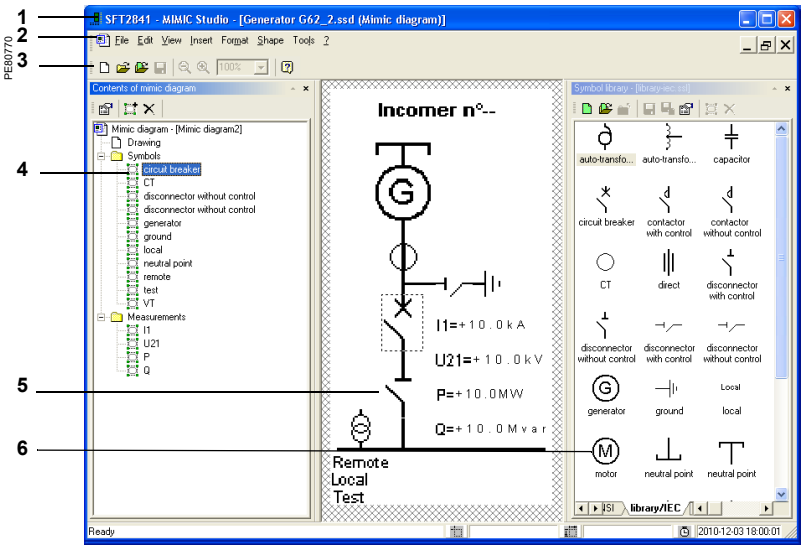

Icons in the main toolbar

Select a new diagram in the library of existing diagrams

Open an existing diagram

Open a symbol library

Save a diagram

Zoom forward and back

200% Display the value of the zoom in %. The value of the zoom can also be entered directly

On-line help

SFT2841 software
Mimic-diagram editor
General screen organization

Pe50379

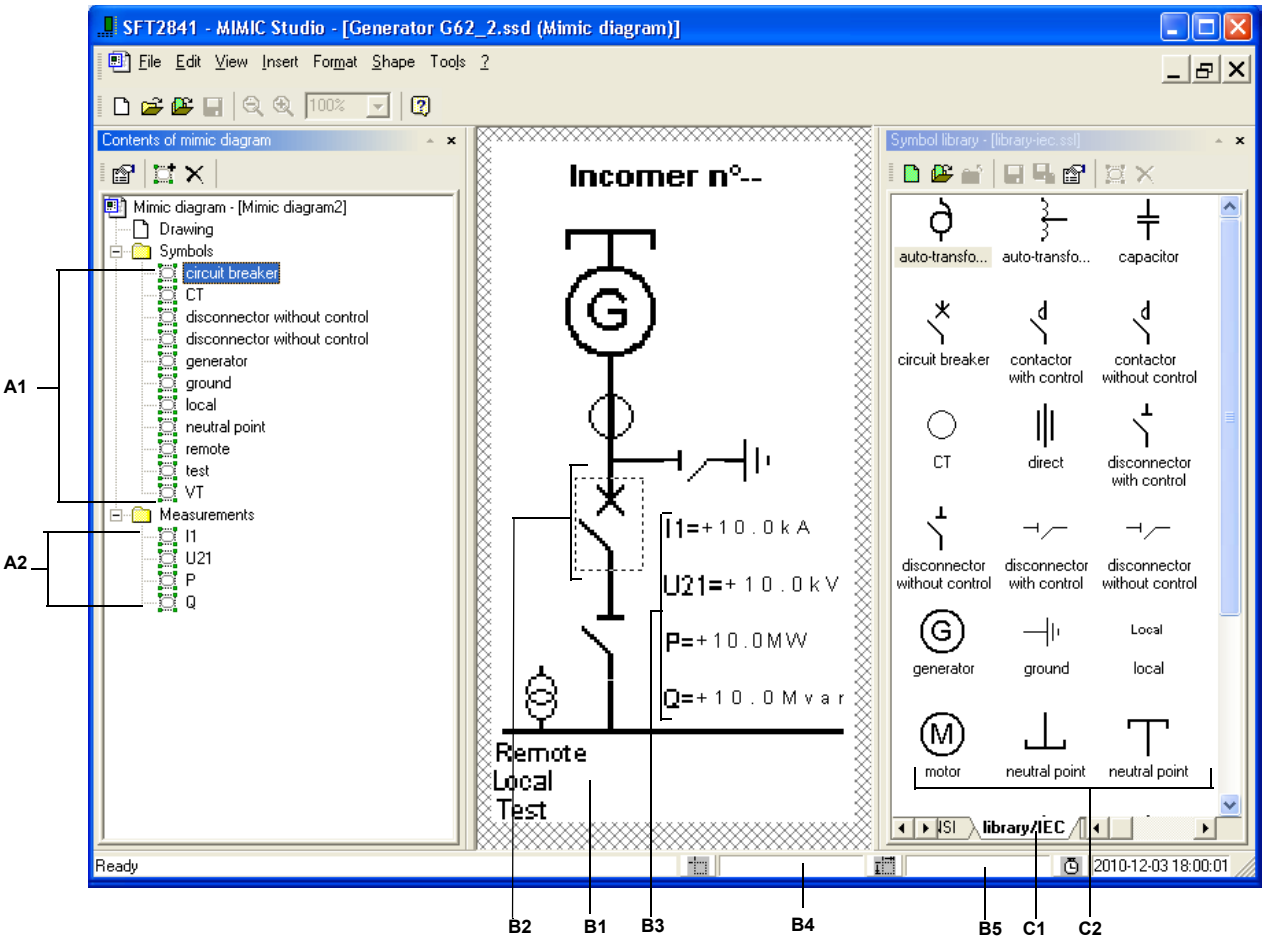

Mimic-diagram explorer		Mimic-diagram editor		Symbol library	
Description		**Description**		**Description**	
A1	List of symbols contained in the mimic diagram	**B1**	Mimic diagram. Double-click the diagram to open the drawing software	**C1**	Tabs to select a symbol library
A2	List of measurements contained in the mimic diagram	**B2**	Symbol contained in the mimic diagram	**C2**	Symbols in the library
Double-click a symbol or measurement to open the "Symbol properties" window.		**B3**	Measurements contained in the mimic diagram	Double-click a symbol to open the "Symbol properties" window.	
Icons in the toolbar		Double-click a symbol or measurement to open the "Symbol properties" window. Click and hold to move a symbol or a measurement in the diagram.		**Icons in the toolbar**	
	Read or modify diagram properties				Create a new symbol library
	Copy a symbol from the library				Open a symbol library
	Delete a symbol				Close a symbol library
		B4	Coordinates of the selected symbol or measurement in pixels		Save the symbol library to the same file or a different file
		B5	Dimensions of the selected symbol or measurement in pixels		Read or modify symbol-library properties
					Create a new symbol
					Delete a symbol

7

SFT2841 software
Mimic-diagram editor
Use

Use

The mimic-diagram editor can be used on three different levels, depending on the degree to which the diagram is personalized:

- simple use, e.g. to adapt a predefined diagram
- advanced use, e.g. to complete a predefined diagram
- expert use, e.g. to create a new diagram.

Simple use

This level is the least complicated and should be used first.
To adapt a predefined diagram, proceed as follows:

1. Select a predefined diagram template in the IEC or ANSI libraries.
2. Set up the diagram properties:
   - finish the diagram
   - assign the symbol inputs and outputs, if necessary
3. Save the diagram.
4. Quit the mimic-diagram editor.

Advanced use

To complete a predefined diagram, proceed as follows:

1. Select a predefined diagram template in the IEC or ANSI libraries.
2. Add an existing symbol or measurement to the diagram.
3. Set up the diagram properties:
   - finish the diagram
   - select the new measurements to be displayed
   - assign the symbol inputs and outputs, if necessary
4. Save the diagram.
5. Quit the mimic-diagram editor.

Expert use

Creation of a completely new diagram requires in-depth knowledge of all the functions offered by the mimic-diagram editor.
To create a new diagram, proceed as follows:

1. Create new symbols in the symbol library.
2. Set up the properties of the new symbols.
3. If applicable, create new diagram templates on the main window.
4. Create the new diagram:
   - add the symbols
   - add the measurements
   - draw the background of the diagram
5. Set up the diagram properties:
   - select the new measurements to be displayed
   - assign the symbol inputs and outputs, if necessary
6. Save the diagram.
7. Quit the mimic-diagram editor.

SFT2841 software
Mimic-diagram editor
Use

PE80771

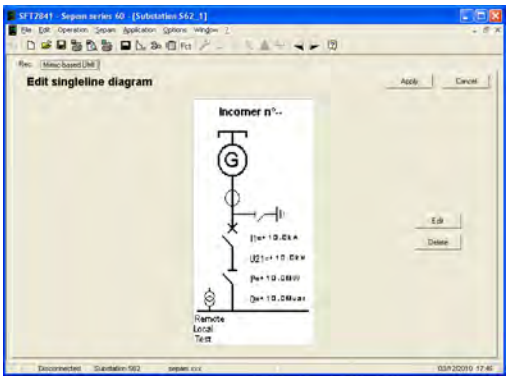

Access to the mimic-diagram editor.

Run the mimic-diagram editor

The mimic-diagram editor can be accessed only if the Easergy Sepam series 60 was set up with a mimic-based UMI on the "Hardware set-up" screen in the SFT2841 software.

The mimic-diagram editor of the SFT2841 software is accessed via the Fct icon and the "Mimic-based UMI" tab.

Click the [Edit] button to run the mimic-diagram editor.
Simply close or reduce the mimic-diagram editor to return to the setting and operating screens in the SFT2841 software.

When the mimic-diagram editor is run:
- if a diagram is already linked to the Sepam, the editor displays the diagram
- if a diagram is not linked to the Sepam, a window opens for selection of a predefined diagram template in one of the two diagram libraries supplied:
  - diagrams complying with standard IEC 60617
  - diagrams complying with standard ANSI Y32.2-1975.

PE50432



Selection of a predefined diagram template.

Select a predefined diagram template

The window used to select a predefined diagram template is displayed:
- when the mimic-diagram editor is opened for the first time
- when the File/New command is clicked
- when the icon is clicked.

Two libraries of predefined diagrams are supplied:
- diagrams complying with standard IEC 60617
- diagrams complying with standard ANSI Y32.2-1975.

For each Sepam application, each library contains a number of predefined diagram templates corresponding to the most frequently encountered single-line diagrams.

Other diagram templates can be managed by clicking the [Browse the templates] button.

To see the available diagrams, select a subcategory (e.g. substations).
A number of diagrams are then displayed in the "Template of mimic diagram" window.

To select a diagram template, click the drawing and immediately confirm by clicking [OK].

SFT2841 software
Mimic-diagram editor
Use



Personalization of diagram properties.

Set up the diagram properties

Operation of a mimic-diagram can be completely personalized.

The icon in the toolbar of the diagram explorer provides access to the "Properties of the mimic diagram" window.

Personalization of diagram properties is broken down into four operations:
1. Indication of the general diagram properties: diagram name, description and version.
2. Modifications in the diagram.
3. Checks on the measurements displayed in the predefined fields based on the list of values measured by Sepam.
4. Assignment of inputs/outputs to the animated/controlled symbols making up the diagram.

Modifications in the diagram

Click the [Modify] button for the drawing to run the drawing software on the PC (MS Paint by default). The background is displayed, without the symbols or the fields reserved for the measurements.
The drawing software can be used to rework the diagram, e.g. by adding text or modifying the title.

Check on diagram measurements

Each "Measurement" symbol in the diagram is linked by default to the corresponding Sepam measurement.
For example, the "I1" symbol is linked to the value of current I1, the phase 1 current measured by Sepam.
It is possible to display additional measurement values that can be selected in the "Measurements" list.

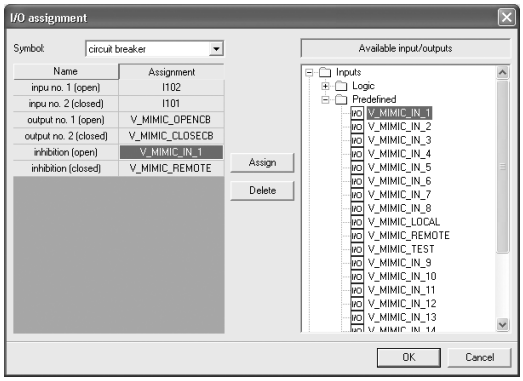

Logic input/output assignment.

Logic input/output assignment

The [Modify] button for input/output assignment opens the "I/O assignment" window used to check and modify the Sepam variables assigned to each input and output of each symbol.
Proceed as follows to modify the symbol inputs and outputs in a mimic-diagram:
1. Select a symbol.
2. Select an input to be modified, if applicable.
3. Select the desired Sepam input variable among the available inputs (it is not possible to assign a Sepam output variable to a symbol input)
   - click the [Assign] button to link the Sepam variable to the symbol input
   - click the [Delete] button to release the symbol input.
4. Proceed in the same manner to modify the assignment of a symbol output, if applicable.
5. Confirm the modifications by clicking [OK].
6. Celect the next symbol and proceed in the same manner.

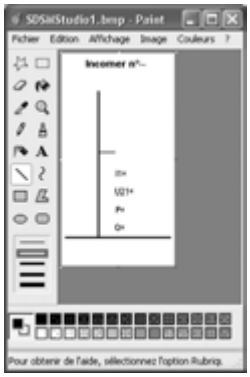

Drawing of the background of the diagram.

Modify the background of the diagram

The background is the drawing, without the symbols or the fields reserved for the measurements.
The background can be modified using the drawing software on the PC (MS Paint by default):
- to add text or modify the title of the diagram
- to add descriptions for new measurements
- to complete the single-line diagram and add new symbols to the diagram.

The drawing software can be run:
- via the "Diagram properties" window
- by double-clicking the diagram on the main editor window.

It is necessary to save the new drawing and quit the drawing software before returning to the mimic-diagram editor.

SFT2841 software
Mimic-diagram editor
Use

Add an existing symbol to the diagram

Proceed as follows to add an existing symbol to a diagram:
1. Select an existing symbol in one of the symbol libraries.
2. Add the symbol to those already in the diagram by clicking the icon in the diagram explorer.

The new symbol is displayed in the upper left-hand corner of the diagram.
3. Modify the drawing by adding the graphic elements required to connect the new symbol in the mimic-diagram.
4. Correctly position the new symbol in the diagram:
- select the new symbol with a click on the left mouse button
- hold and drag the symbol to the desired position in the diagram.

To precisely position the symbol, it is possible to indicate the desired coordinates:
- open the "Symbol properties" window
- modify the symbol coordinates (X, Y) in the "Specific" zone
- confirm the new position by clicking [OK].

5. Test the animation of the new symbol:
- open the "Symbol properties" window
- modify symbol state: modify the data in the "VALUE" field in the "Specific" zone
- confirm the new state by clicking [OK] and check the new graphic representation of the symbol in the diagram.



Personalization of diagram properties.

Add a measurement to a diagram

The following measurements can be shown on a diagram:
- current: I1, I2, I3, I0, I0Σ
- voltage: V1, V2, V3, V0, U21, U32, U13
- power: P, Q, S, Cos φ.

Proceed as follows to add a measurement to a diagram:
1. Display diagram properties by clicking the icon in the diagram explorer.
2. In the "Measurements" list, click the box for the measurement to be added and confirm by clicking [OK].
3. The new measurement is displayed in the upper left-hand corner of the diagram. modify the drawing by adding the description of the new measurement, e.g. "I0 =".
4. Correctly position the new measurement in the diagram:
- select the new measurement with a click on the left mouse button
- hold and drag the measurement to the desired position in the diagram.

To precisely position the new measurement, it is possible to indicate the desired coordinates:
- open the "Symbol properties" window
- modify the measurement coordinates (X, Y) in the "Specific" zone
- confirm the new position by clicking [OK].

5. Modify the display size of the new measurement:
- open the "Symbol properties" window
- modify the display size of the measurement by changing the value in the "Size" field in the "Specific" zone
- confirm the new size by clicking [OK] and check the new graphic representation of the measurement in the diagram.

Delete a symbol or measurement in the diagram

Proceed as follows to delete a symbol or measurement in the diagram:
1. Select the symbol or measurement to be deleted in the diagram explorer.
2. Delete the symbol or the measurement by clicking the icon in the diagram explorer.

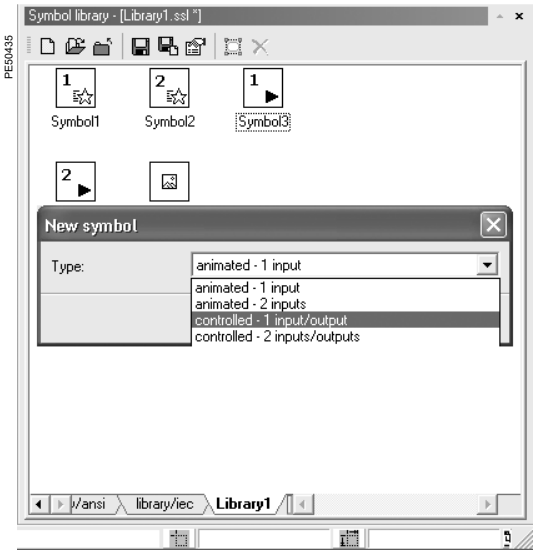

Creation of new symbols.

Create a new symbol

Two libraries of predefined diagrams are supplied in the "Symbol library" window:
- a set of diagrams complying with the IEC standard
- a set of diagrams complying with the ANSI standard.

It is not possible to create new symbols in the two libraries. Each symbol is represented by an icon.

Proceed as follows to create a new symbol:
1. Create a new library by clicking the icon or select a previously created library.
2. Create a symbol in the library by clicking the icon.
3. Select the type of symbol in the "New symbol" window among the five types of symbols available.

The five types are presented in the section below.
The symbol is displayed in the library with a default icon.
4. Set up the symbol properties by double-clicking the symbol. The "Symbol properties" window is displayed to personalize the graphic representation of the symbol and assign the inputs and outputs.

See the section on "Definition of symbol properties".

Five types of symbols

Symbol type	Default icon	Inputs	Example of IEC symbol	Outputs
Animated - 1 input	1	Active		
Animated - 2 inputs	2	Open Closed		
Controlled - 1 input/output	1	Active Inhibition (active) Inhibition (inactive)		Active
Controlled - 2 inputs/outputs	2	Open Closed Inhibition (open) Inhibition (closed)		Open Close
Fixed			G	

SFT2841 software
Mimic-diagram editor
Use

PE50440



Definition of symbol properties:
1 *Symbol name*
2 *Symbol description*
3 *Modify the icon*
4 *Modify the graphic representations of symbol states*
5 *Modify input/output assignments*
6 *Position and test the symbol in the diagram*

PE50436

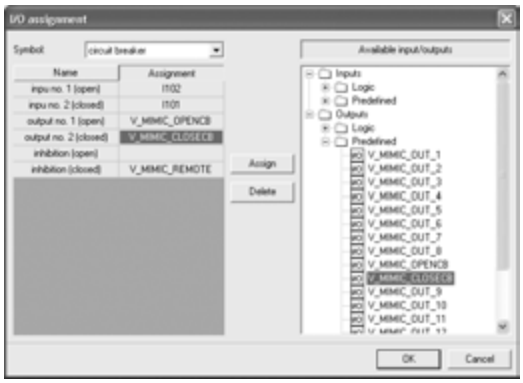

Input/output assignment.

Set up the symbol properties

The properties of a symbol can be personalized in the "Symbol properties" window.

Personalization of symbol properties is broken down into four operations:
1. Indication of the general symbol properties: name and description.
2. Modification of the symbol icon.
3. Modification of the graphic representations of symbol states.
4. Assignment of the inputs/outputs linked to the symbol.

Modify the symbol icon

The icon represents the symbol in the library of symbols.
Click the [Modify] button **"3"** to run the drawing software. The icon is displayed and can be modified as desired, as long as the format (32 x 32 pixels) is maintained.
It is necessary to save the new icon and quit the drawing software before going on to the next step.

Modify the graphic representations of symbol states

The animated or controlled symbols are represented in the diagram in two or three different states.
A graphic representation corresponds to each state.
Click the [Modify] button **"4"** to run the drawing software. The graphic representation of a symbol state is displayed and can be freely modified.
It is necessary to save the new representation and quit the drawing software before going on to the next step.

Assign the inputs/outputs linked to the symbol.

The [Modify] button **"5"** opens the "I/O assignment" window used to assign a Sepam variable to each input and output of the symbol.

Proceed as follows to assign a symbol input:
1. Select a symbol input.
2. Select a Sepam input variable among the available inputs (it is not possible to assign a Sepam output variable to a symbol input).
3. Click the [Assign] button to link the Sepam variable to the symbol input.

Proceed in the same manner to assign a symbol output.

Create a new predefined diagram template

A personalized mimic-diagram can be saved as a template for later use, similar to the predefined diagram templates in the IEC and ANSI diagram libraries.

Proceed as follows to save a personalized diagram as a diagram template:
1. Select the command File / Save as…
2. Open the directory \SDSMStudio\Template.
3. If necessary, create a personalized directory in addition to the existing \IEC and \ANSI directories.
4. Indicate the name of the diagram file with the .sst extension.
5. Set the type of file as "Document template (*.sst)".
6. Save the mimic diagram.

When the mimic-diagram editor is run, the new predefined diagram templates are proposed in the personalized directory or in the "Others" directory.

Principles

⚠ ⚠ DANGER

HAZARD OF ELECTRIC SHOCK, ELECTRIC ARC OR BURNS

- Only qualified personnel should commission this equipment. Such work should be performed only after reading this entire set of instructions.
- NEVER work alone.
- Obey all existing safety instructions when commissioning and maintaining high-voltage equipment.
- Beware of potential hazards and wear personal protective equipment.

Failure to follow these instructions will result in death or serious injury.

Protection relay testing

Protection relays are tested prior to commissioning, with the dual aim of maximizing availability and minimizing the risk of malfunctioning of the assembly being commissioned. The problem consists of defining the consistency of the appropriate tests, keeping in mind that the relay is always involved as the main link in the protection chain.

Therefore, protection relays based on electromechanical and static technologies, the performances of which are not totally reproducible, must be systematically submitted to detailed testing, not only to qualify relay commissioning, but also to check that they actually are in good operating order and maintain the required level of performance.

The Sepam concept makes it possible to do away with such testing, since:

- the use of digital technology guarantees the reproducibility of the performances announced
- each of the Sepam functions has undergone full factory-qualification
- an internal self-testing system provides continuous information on the state of the electronic components and the integrity of the functions (e.g. automatic tests diagnose the level of component polarization voltages, the continuity of the analog value acquisition chain, non-alteration of RAM memory, absence of settings outside the tolerance range) and thereby guarantees a high level of availability

Sepam is therefore ready to operate without requiring any additional qualification testing that concerns it directly.

Sepam commissioning tests

The preliminary Sepam commissioning tests may be limited to a commissioning check, i.e.:

- checking of compliance with BOMs and hardware installation diagrams and rules during a preliminary general check
- checking of the compliance of the general settings and protection settings entered with the setting sheets
- checking of current or voltage input connections by secondary injection tests
- checking of logic input and output connections by simulation of input data and forcing of output status
- validation of the complete protection chain (possible customized logical functions included)
- checking of the connection of the optional MET148-2, MSA141 and MSC025 modules.

The various checks are described on the next page.

General principles

■ **All the tests should be carried out with the MV cubicle completely isolated and the MV circuit breaker racked out (disconnected and open)**
■ **All the tests are to be performed in the operating situation.**
The SFT2841 parameter setting and operating software is the basic tool for all Sepam users. It is especially useful during Sepam commissioning tests. The tests described in this document are systematically based on the use of that tool.

For each Sepam:
■ only carry out the checks suited to the hardware configuration and the functions activated
(A comprehensive description of all the tests is given further on)
■ use the test sheet provided to record the results of the commissioning tests.

Checking of current and voltage input connections

The secondary injection tests to be carried out to check the connection of the current and voltage inputs are described according to:
■ the type of current and voltage sensors connected to Sepam, in particular for residual current and voltage measurement
■ the type of injection generator used for the tests: three-phase or single-phase generator
■ the type of Sepam.
The different possible tests are described further on by:
■ a detailed test procedure
■ the connection diagram of the associated test generator.

Determination of checks to be carried out

The table below indicates the page on which the following are described:
■ general tests to be performed according to the type of measurement sensors and type of generator used
■ additional tests to be performed for certain types of Sepam, with a single or three-phase generator

General tests

Current sensors	Voltage sensors	Three-phase generator	Single-phase generator
3 CTs or 3 LPCTs	3 VTs	page 457	page 459
3 CTs or 3 LPCTs 1 or 2 core bal. CTs	3 VTs	page 457 page 463	page 459 page 463
3 CTs or 3 LPCTs	3 VTs 3 V0 VTs	page 457 page 464	page 459 page 464
3 CTs or 3 LPCTs 1 or 2 core bal. CTs	3 VTs 3 V0 VTs	page 457 page 462	page 459 page 462
3 CTs or 3 LPCTs	2 phase VTs 3 V0 VTs	page 458 page 464	page 460 page 464
3 CTs or 3 LPCTs 1 or 2 core balance CTs	2 phase VTs 3 V0 VTs	page 458 page 462	page 460 page 462
3 CTs or 3 LPCTs	3 VTs 1 neutral point VT	page 457 page 465	page 459 page 465
3 CTs or 3 LPCTs 1 or 2 core bal. CTs	3 VTs 1 neutral point VT	page 457 pages 463 and 465	page 459 pages 463 and 465
3 CTs or 3 LPCTs	2 phase VTs 1 neutral point VT	page 458 page 465	page 460 page 465
3 CTs or 3 LPCTs 1 or 2 core bal. CTs	2 phase VTs 1 neutral point VT	page 458 pages 463 and 465	page 460 pages 463 and 465

Additional tests

Type of Sepam	Type of test	
C60	Checking of unbalance current input connections	page 466

Testing and metering equipment required

Generators

■ dual sinusoidal AC current and voltage generator:
□ 50 or 60 Hz frequency (according to the country)
□ current adjustable up to at least 5 A rms
□ adjustable up to the rated secondary phase-to-phase voltage of the VTs
□ adjustable relative phase displacement (V, I)
□ three-phase or single-phase type
■ DC voltage generator:
□ adjustable from 48 to 250 V DC, for adaptation to the voltage level of the logic input being tested.

Accessories

■ plug with cord to match the "current" test terminal box installed
■ plug with cord to match the "voltage" test terminal box installed
■ electric cord with clamps, wire grip or touch probes.

Metering devices (built into the generator or separate)

■ 1 ammeter, 0 to 5 A rms
■ 1 voltmeter, 0 to 230 V rms
■ 1 phasemeter (if phase displacement (V, I) is not identified on the voltage and current generator).

Computer equipment

■ PC with minimal configuration:
□ Microsoft Windows XP or Vista
□ 400 MHz Pentium processor
□ 64 MB of RAM
□ 200 MB free on hard disk
□ CD-ROM drive
■ SFT2841 software
■ CCA783 serial connection cord or CCA784 USB connection cord between the PC and Sepam.

Documents

■ complete connection diagram of Sepam and additional modules, with:
□ phase current input connections to the corresponding CTs via the test terminal box
□ residual current input connection
□ phase voltage input connections to the corresponding VTs via the test terminal box
□ residual voltage input connection to the corresponding VTs via the test terminal box
□ logic input and output connections
□ temperature sensor connections
□ analog output connection
□ connection of the synchro-check module
■ hardware BOMs and installation rules
■ group of Sepam parameter and protection settings, available in paper format.

General examination and preliminary actions

Checking to be done prior to energizing

Apart from the mechanical state of the equipment, use the diagrams and BOMs provided by the contractor to check:

- identification of Sepam and accessories determined by the contractor
- correct earthing of Sepam (via terminal 13 of the 20-pin connector (E) and the functional earthing terminal located on the back of the Sepam unit)
- correct connection of auxiliary voltage (terminal 1: positive polarity; terminal 2: negative polarity)
- presence of the DPC (detection of plugged connectors) bridge on terminals 19-20 of the 20-pin connector (E).
- presence of a residual current measurement core balance CT and/or additional modules connected to Sepam, when applicable
- presence of test terminal boxes upstream from the current inputs and voltage inputs
- conformity of connections between Sepam terminals and the test terminal boxes.

Connections

Check that the connections are tightened (with equipment non-energized).
The Sepam connectors must be correctly plugged in and locked.

Energizing

Switch on the auxiliary power supply.
Check that Sepam performs the following initialization sequence, which lasts approximately 6 seconds:

- green ON and red indicators on
- red indicator off
- pick-up of "watchdog" contact.

The first screen displayed is the phase current measurement screen.

Implementation of the SFT2841 software for PC

1. Start up the PC.
2. Connect either the PC RS 232 serial port or the USB port to the communication port on the front panel of Sepam using either the CCA783 cord or the CCA784 cord.
3. Start up the SFT2841 software, by clicking on the related icon.
4. Choose to connect to the Sepam to be checked.

Identification of Sepam

1. Note the Sepam serial number given on the label stuck to the right side plate of the base unit.
2. Note the references defining the type of application indicated on the adhesive label on the Sepam cartridge.
3. Note the Sepam type and software version using the SFT2841 software, "Sepam Diagnosis" screen.
4. Enter them in the test sheet.

Determination of parameter and protection settings

All of the Sepam parameter and protection settings are determined ahead of time by the design department in charge of the application, and should be approved by the customer.
It is presumed that the study has been carried out with all the attention necessary, or even consolidated by a network coordination study.
All of the Sepam parameter and protection settings should be available at the time of commissioning:

- in paper file format (with the SFT2841 software, the parameter and protection setting file for a Sepam may be printed directly)
- and, when applicable, in the format of a file to be downloaded into Sepam using the SFT2841 software.

Checking of parameters and protection settings

Check to be made when the Sepam parameter and protection settings have not been entered or downloaded during commissioning testing, to confirm the conformity of the parameter and protection settings entered with the values determined during the study.
The aim of this check is not to confirm the relevance of the parameter and protection settings.

1. Go through all the parameter and protection setting screens in the SFT2841 software, in the order proposed in guided mode
2. For each screen, compare the values entered in the Sepam with the values recorded in the parameter and protection setting file
3. Correct any parameter and protection settings that have not been entered correctly, proceeding as indicated in the SFT2841 section of the Use chapter of this manual.

Conclusion

Once the checking has been done and proven to be conclusive, as of that phase, the parameter and protection settings should not be changed any further and are considered to be final.
In order to be conclusive, the tests which follow must be performed with these parameter and protection settings.

Checking of phase current and voltage input connections
With 3-phase generator

Procedure

1. Connect the 3-phase voltage and current generator to the corresponding test terminal boxes, using the plugs provided, according to the appropriate diagram in terms of the number of VTs connected to Sepam.

Block diagram with 3 VTs connected to Sepam

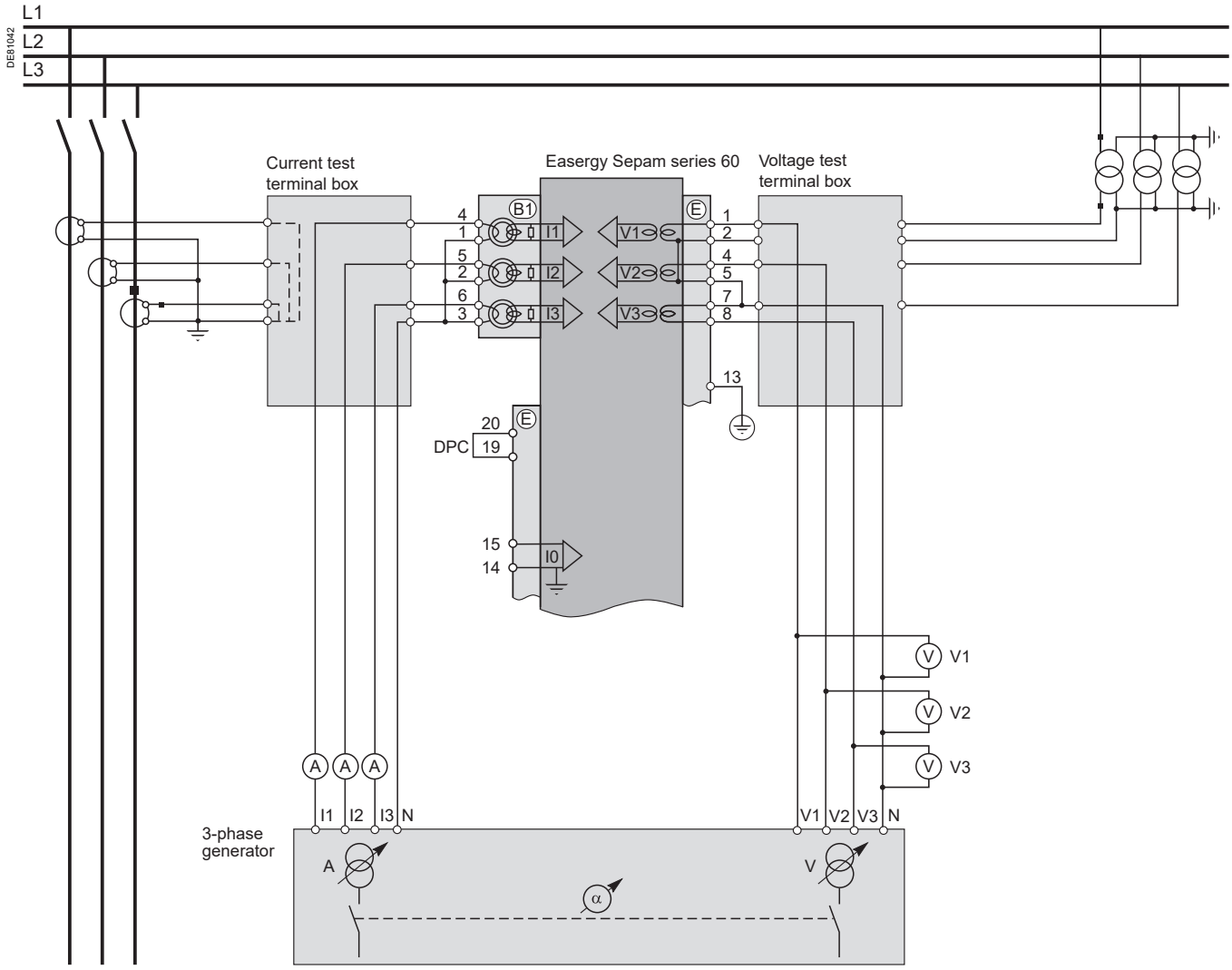

Checking of phase current and voltage input connections
With 3-phase generator

Block diagram with 2 VTs connected to Sepam

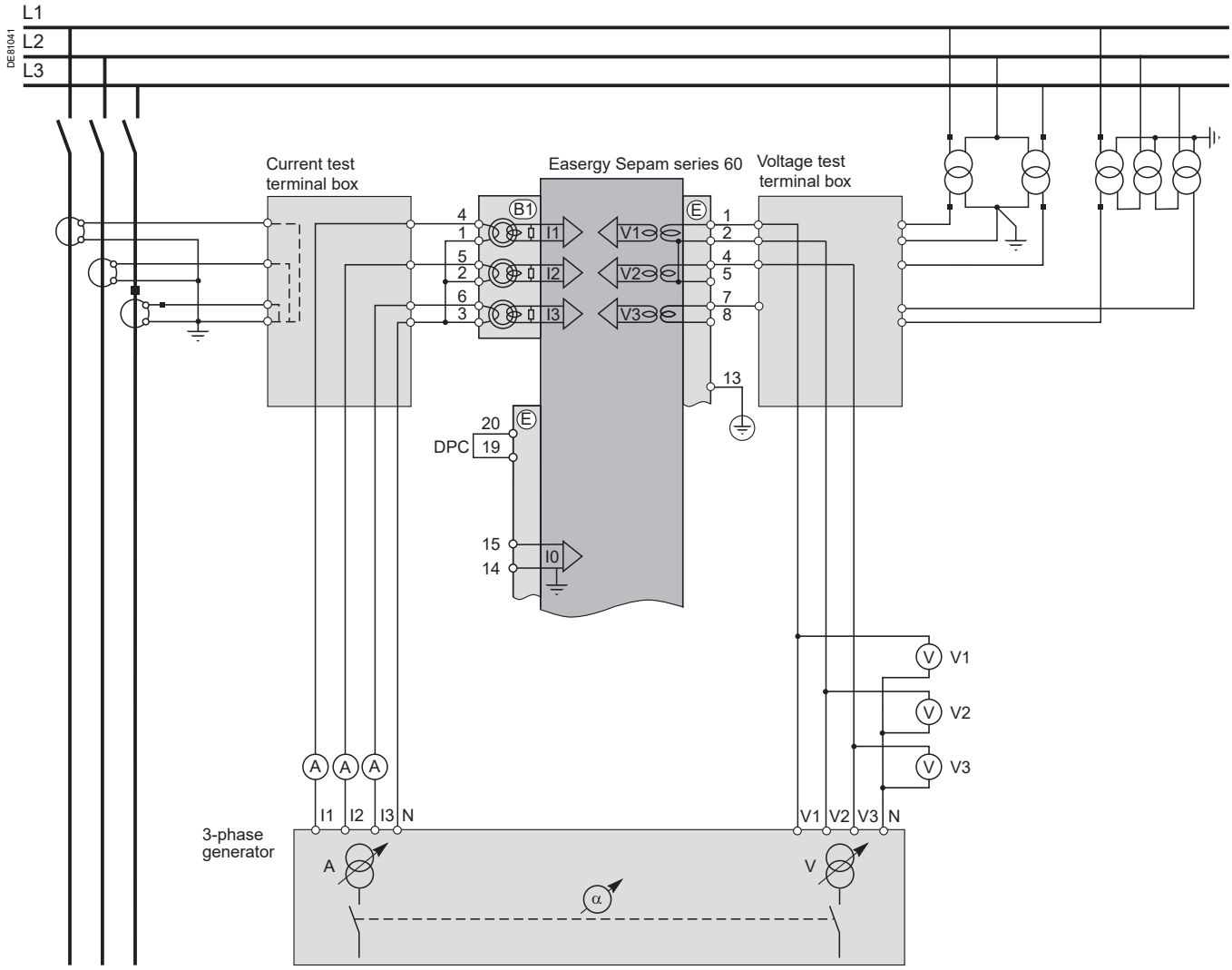

2. Turn the generator on.
3. Apply the 3 generator voltages V1-N, V2-N and V3-N, balanced and set to the rated secondary phase-to-neutral voltage of the VTs (i.e. Vns = Uns/$\sqrt{3}$).
4. Inject the 3 generator currents I1, I2 and I3, balanced and set to the rated secondary current of the CTs (i.e. 1 A or 5 A) and in phase with the voltages applied (i.e. generator phase displacement:
α1(V1-N, I1) = α2(V2-N, I2) = α3(V3-N, I3) = 0°).
5. Use the SFT2841 software to check the following:
■ the value indicated for each of the phase currents I1, I2 and I3 is approximately equal to the rated primary current of the CTs
■ the value indicated for each of the phase-to-neutral voltages V1, V2 and V3 is approximately equal to the rated primary phase-to-neutral voltage of the VT (Vnp = Unp/$\sqrt{3}$)
■ the value indicated for each phase displacement φ1(V1, I1), φ2(V2, I2) and φ3(V3, I3) between currents I1, I2 or I3 and voltages V1, V2 or V3 respectively is approximately equal to 0°
6. Turn the generator off.

Checking of phase current and voltage input connections

With single-phase generator and voltages delivered by 3 VTs

Procedure

1. Connect the single-phase voltage and current generator to the corresponding test terminal boxes, using the plugs provided, according to the block diagram below.

Block diagram

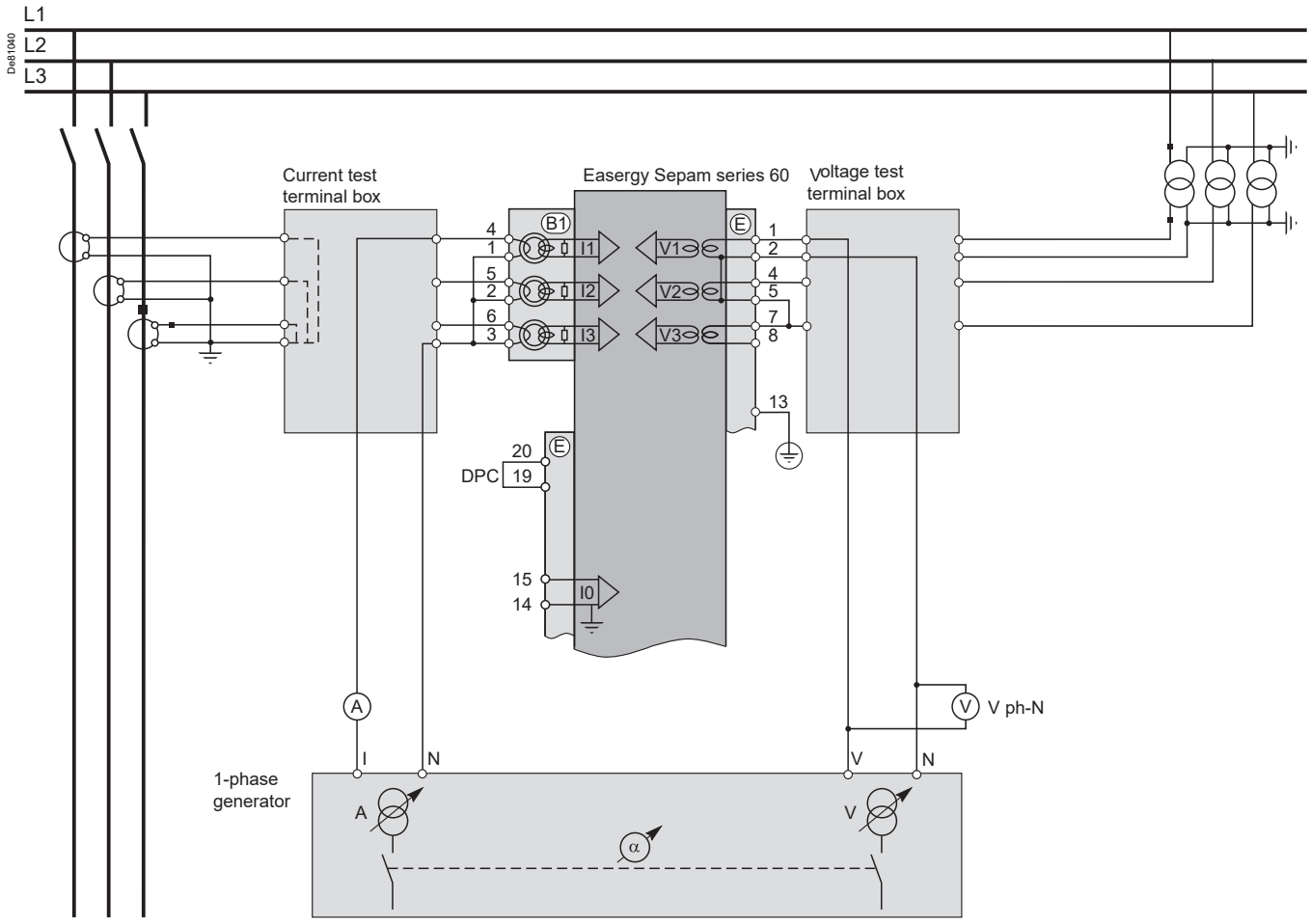

2. Turn the generator on.
3. Apply the generator V-N voltage set to the rated secondary phase-to-neutral voltage of the VTs (i.e. Vns = Uns/$\sqrt{3}$) between Sepam's phase 1 voltage input terminals (via the test box).
4. Inject the generator I current, set to the rated secondary current of the CTs (i.e. 1 A or 5 A) and in phase with the V-N voltage applied (i.e. generator phase displacement α(V-N, I) = 0°) to Sepam's phase 1 current input (via the text box).
5. Use the SFT2841 software to check the following:
   - the value indicated for I1 phase current is approximately equal to the rated primary current of the CT
   - the value indicated for V1 phase-to-neutral voltage is approximately equal to the rated primary phase-to-neutral voltage of the VT (Vnp = Unp/$\sqrt{3}$)
   - the value indicated for the phase displacement φ1(V1, I1) between the I1 current and V1 voltage is approximately equal to 0°
6. proceed in the same way by circular permutation with the phase 2 and 3 voltages and currents, to check the I2, V2, φ2(V2, I2) and I3, V3, φ3(V3, I3) values
7. Turn the generator off.

Checking of phase current and voltage input connections

With single-phase generator and voltages delivered by 2 VTs

Description

Check to be carried out when the voltages are supplied by a 2 VT assembly, with the VT primary circuits connected between phases of the distributed voltage, which means that the residual voltage is obtained outside Sepam (by 3 VTs connected via their secondary circuits in an open delta arrangement) or, when applicable, is not used for the protection function.

Procedure

1. Connect the single-phase voltage and current generator to the corresponding test terminal boxes, using the plugs provided, according to the block diagram below.

Block diagram

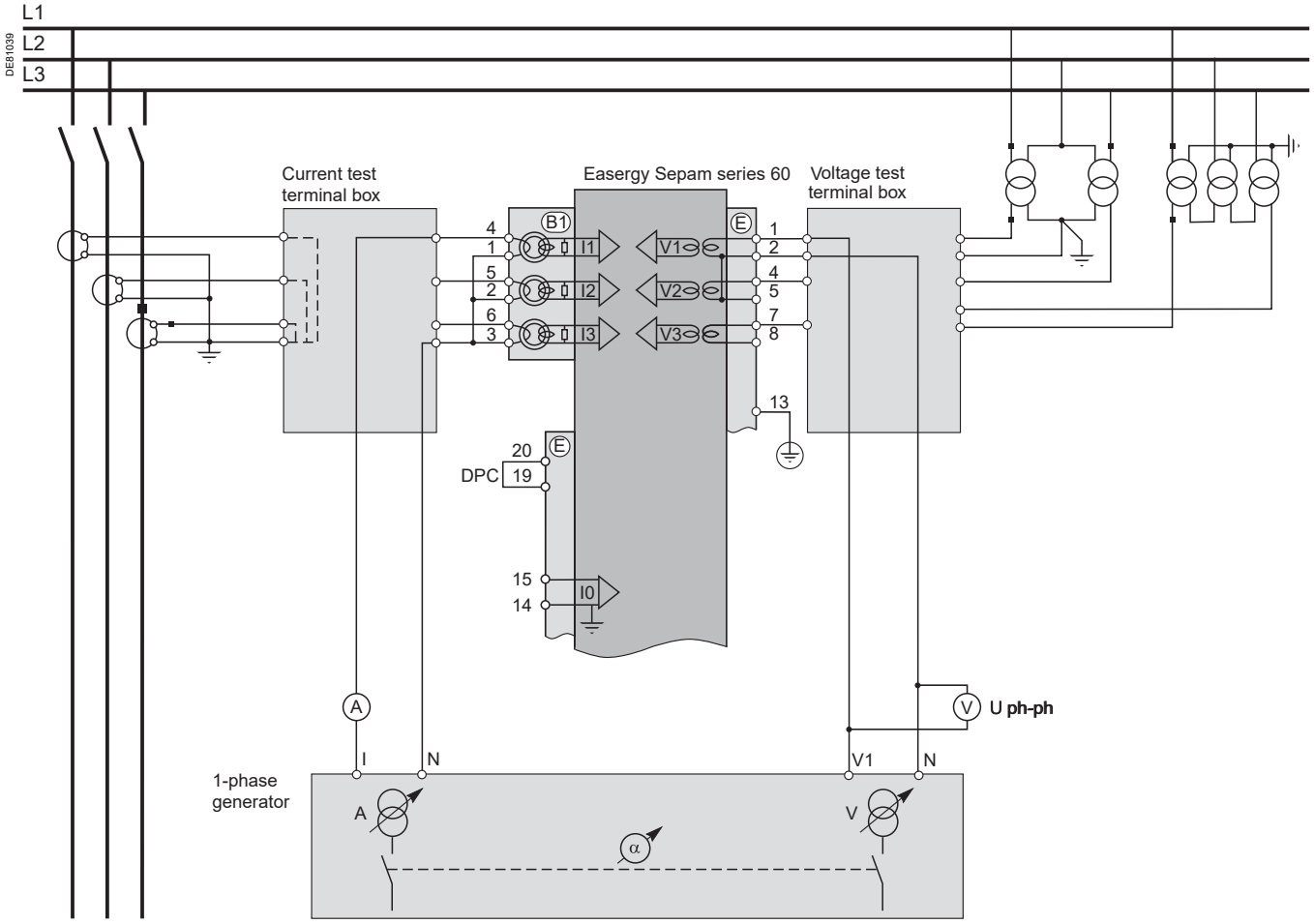

2. Turn the generator on.
3. Apply (via the test box) the voltage delivered at the V-N terminals of the generator, set to $\sqrt{3}/2$ times the rated secondary phase-to-phase voltage of the VTs (i.e. $\sqrt{3}$ Uns/2) between terminals 1-2 of Sepam's voltage inputs.
4. Inject the generator I current, set to the rated secondary current of the CTs (i.e. 1 A or 5 A) and in phase with the V-N voltage applied (i.e. generator phase displacement α(V-N, I) = 0°) to Sepam's phase 1 current input (via the test box).
5. Use the SFT2841 software to check the following:
   - the value indicated for I1 phase current is approximately equal to the rated primary current of the CT (Inp).
   - the value indicated for V1 phase-to-neutral voltage is approximately equal to the rated primary phase-to-neutral voltage of the VT (Vnp = Unp/$\sqrt{3}$)
   - the value indicated for the phase displacement φ1(V1, I1) between the I1 current and V1 voltage is approximately equal to 0°
6. Proceed in the same way to check the I2, V2, φ2(V2, I2) values:
   - apply the generator V-N voltage set to $\sqrt{3}$Uns/2 in parallel between terminals 1-2 and 4-2 of Sepam's voltage inputs (via the test box).
   - inject an I current set to 1 A or 5 A and in phase opposition with the V-N voltage (i.e. α(V-N, I) = 180°) to Sepam's phase 2 current input (via the test box)
   - obtain I2 ≅ Inp, V2 ≅ Vnp = Unp/$\sqrt{3}$ and φ2 ≅ 0°. In the absence of residual voltage, V3 = 0, U32 = $\sqrt{3}$Unp/2.
7. check the I3, V3, φ3(V3, I3) values as well:
   - apply the generator V-N voltage set to $\sqrt{3}$Uns/2 between terminals 4-2 of Sepam's voltage inputs (via the test box)
   - inject a current equal to 1 A or 5 A and in phase with the V-N voltage (i.e. α (V-N, I) = 0°) to Sepam's phase 3 current input (via the test box)
   - obtain I3 ≅ Inp, V3 ≅ Vnp = Unp/$\sqrt{3}$ and φ3 ≅ 0°. In the absence of residual voltage, V3 = 0, U32 = $\sqrt{3}$Unp/2
8. Turn the generator off.

Checking of phase current input connections
LPCT type current sensors

Phase current measurement by LPCT sensors

■ The 3 LPCT current sensors are connected via an RJ45 plug to the CCA671 connector which is to be mounted on the rear panel of Sepam, identified as (B1).
■ The connection of only one or two LPCT sensors is not allowed and causes Sepam to go into the fail-safe position.
■ The rated primary current In measured by the LPCT sensors is to be entered as a Sepam general setting and configured by microswitches on the CCA671 connector.

Procedure

The tests to be carried out to check phase current input connections are the same whether the phase currents are measured by CTs or LPCT sensors. Only the Sepam current input connection procedure and current injection values change.

To test current inputs connected to LPCT sensors with a standard injection box, the ACE917 injection adapter is required.
The ACE917 adapter is inserted between:
■ the standard injection box
■ the LPCT test plug:
□ integrated in the Sepam CCA671 connector
□ or transferred by means of the CCA613 accessory.

The ACE917 injection adapter should be set according to the currents selected on the CCA671 connector: the ACE917 setting should be equal to the number of the microswitch that is set to 1 on the CCA671.
The injection value depends on the rated primary current selected on the CCA671 connector and entered in the Sepam general settings, i.e.:
■ 1 A for the following values (in Amps): 25, 50, 100, 133, 200, 320, 400, 630
■ 5 A for the following values (in Amps): 125, 250, 500, 666, 1000, 1600, 2000, 3150.

Block diagram (without CCA613 accessory)

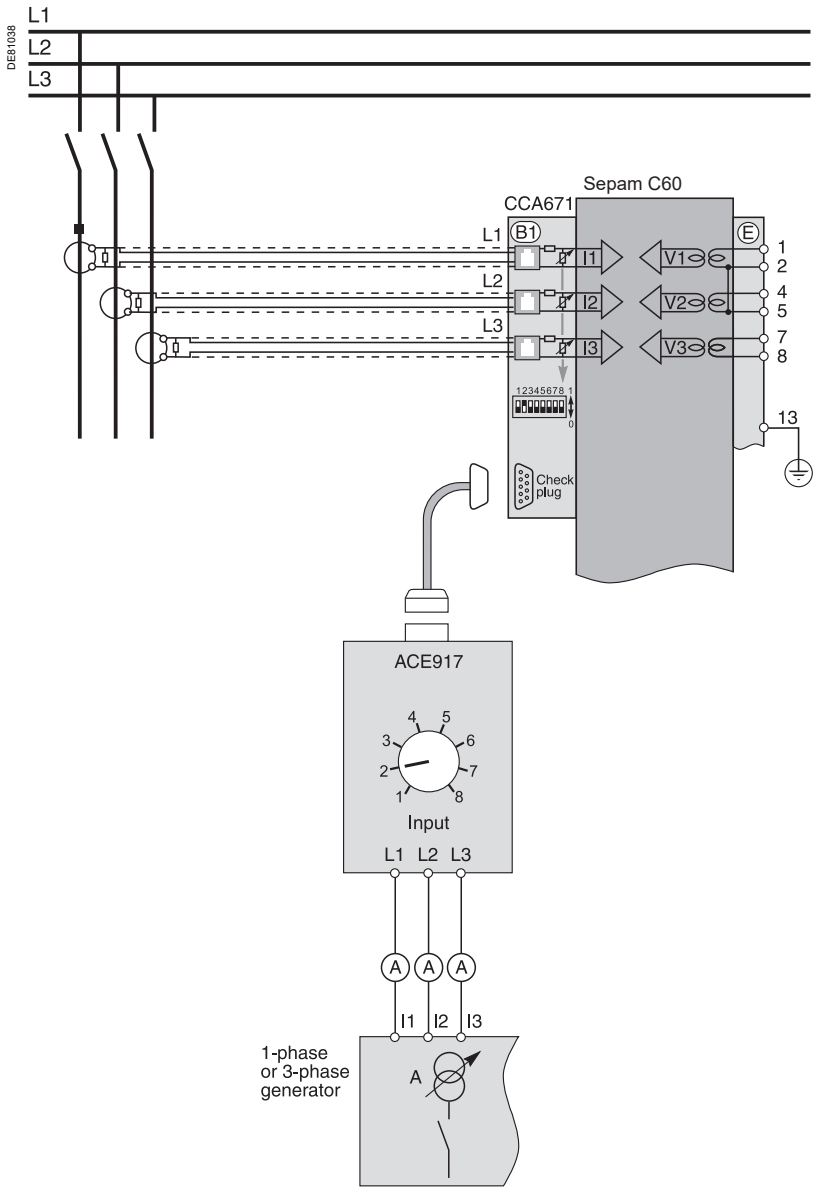

Checking of residual current and residual voltage input connections

Description

Check to be carried out when the residual voltage is delivered by 3 VTs on the secondary circuits connected in an open delta arrangement and when the residual current is obtained by a specific sensor such as:

- CSH120, CSH200 or CSH300 core balance CT
- CSH30 interposing ring CT (whether it is installed on the secondary circuit of a single 1 A or 5 A CT which encompasses the 3 phases, or on the neutral connection of the three 1 A or 5 A phase CTs)
- other core balance CT connected to an ACE990 interface.

Procedure

1. Connect according to the diagram below:

- the generator voltage terminals to the voltage test terminal box using the plug provided,
- a wire between the generator current terminals to inject current into the primary circuit of the core balance CT or CT, with the wire passing through the core balance CT or CT in the P1-P2 direction, with P1 the busbar end and P2 the cable end.

Block diagram

Note: *the number of CTs/VTs connected to the Sepam current/voltage connector phase inputs is given as an example and is not used for the test.*

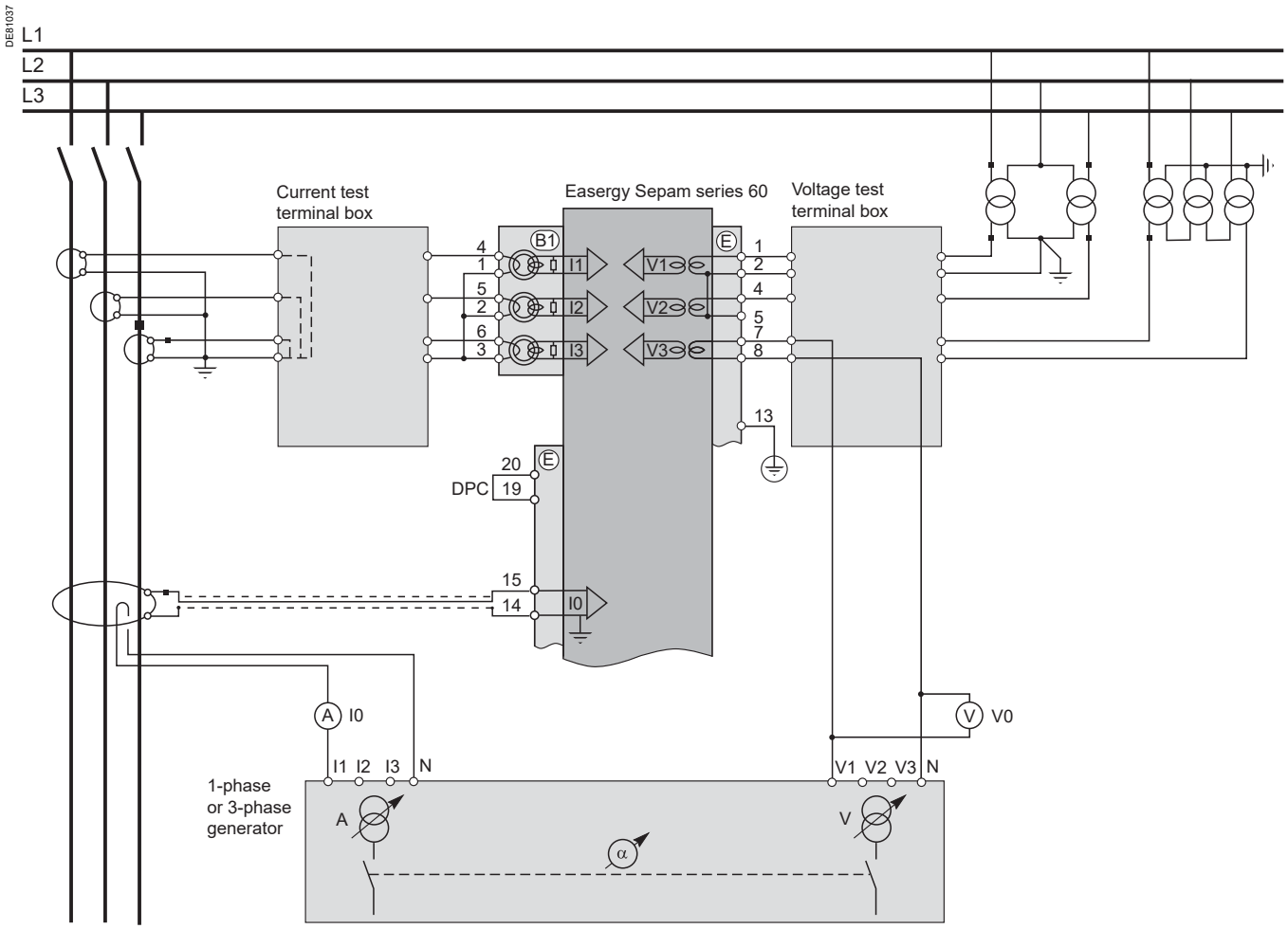



Easergy Sepam series 60 is equipped with one residual Easergy input which may be connected to a core balance CT installed on the cables, tank earthing cable or neutral point of a transformer, or on the earthing cable of a motor or generator. In some cases, reading of the φ0 angle is impossible due to the position of the core balance CT (e.g.: transformer tank earthing cable or neutral point) or because only one of the two I0 or V0 measurements is necessary or possible. When this is the case, simply check the measured residual current value I0.

2. Turn the generator on.
3. Apply a V-N voltage set to the rated secondary voltage of the VTs connected in an open delta arrangement (i.e. Uns/$\sqrt{3}$ or Uns/3)
4. inject an I current set to 5 A, and in phase with the voltage applied (i.e. generator phase displacement α(V-N, I) = 0°).
5. Use the SFT2841 software to check the following:

- the value indicated for the measured I0 residual current is approximately equal to 5 A
- the value indicated for the measured V0 residual voltage is approximately equal to the rated primary phase-to-neutral voltage of the VTs (i.e. Vnp = Unp/$\sqrt{3}$)
- the value indicated for the phase displacement φ0(V0, I0) between the I0 current and V0 voltage is approximately equal to 0°

6. Turn the generator off.

Checking of residual current input connection

Description

Check to be carried out when the residual current is measured by a specific sensor such as:
- CSH120, CSH200 or CSH300 core balance CT
- CSH30 interposing ring CT (whether it is installed on the secondary circuit of a single 1 A or 5 A CT which encompasses the 3 phases, or on the neutral connection of the three 1 A or 5 A phase CTs)
- other core balance CT connected to an ACE990 interface,
- and when the residual voltage is calculated in Sepam or cannot be calculated (e.g.: assembly with 2 VTs connected via their primary circuits) and is therefore not available for the protection function.

Procedure

1. Connect according to the diagram below:
- a wire between the generator current terminals to inject current into the primary circuit of the core balance CT or CT, with the wire passing through the core balance CT or CT in the P1-P2 direction, with P1 the busbar end and P2 the cable end
- when applicable, the generator voltage terminals to the voltage test terminal box, so as to only supply Sepam's phase 1 voltage input and therefore obtain a residual voltage V0 = V1.

Block diagram

Note: *the number of CTs connected to the Sepam current connector phase inputs is given as an example and is not used for the test.*

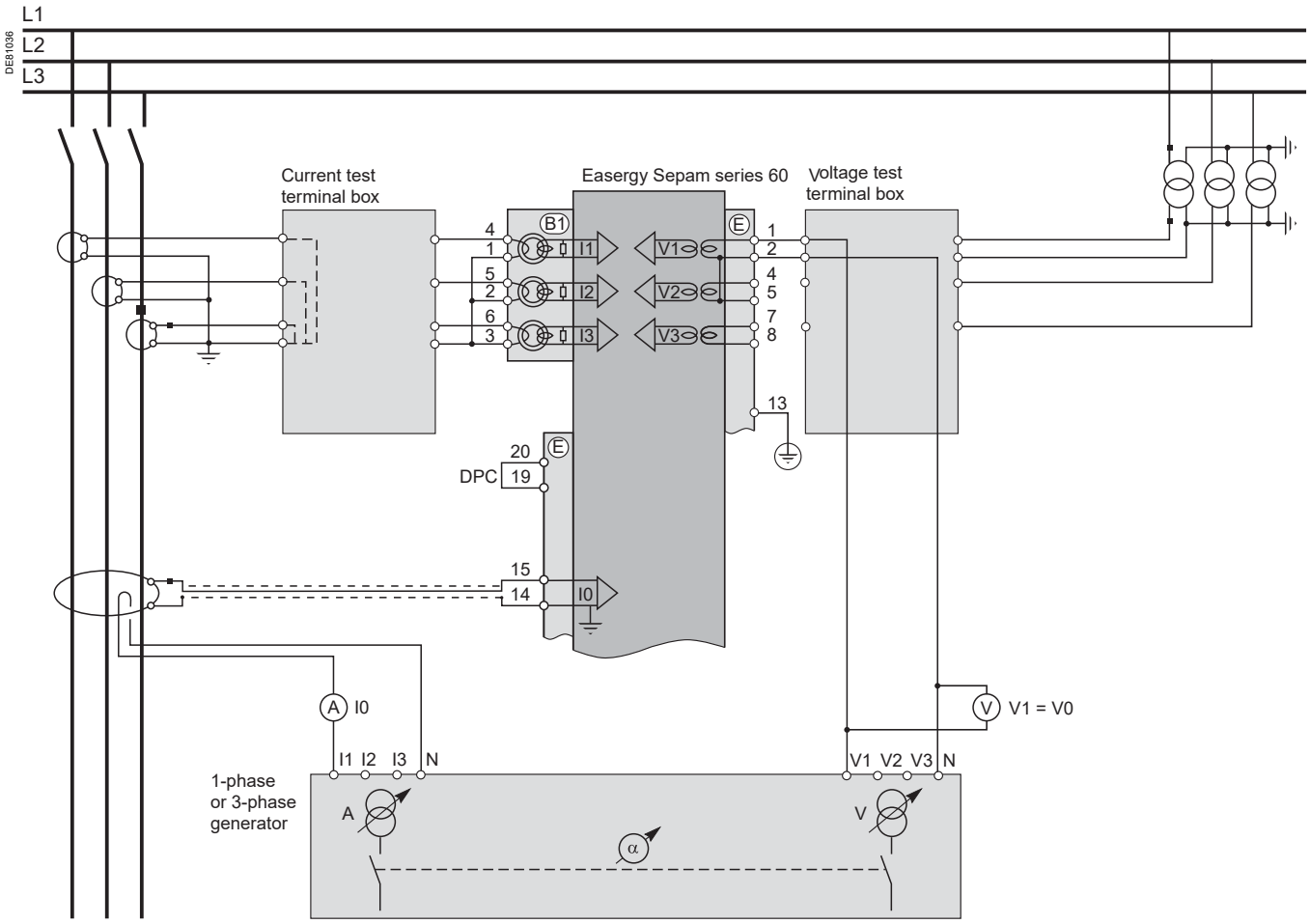



Easergy Sepam series 60 is equipped with 2 independent residual current inputs which may be connected to a core balance CT installed on the cables, tank earthing cable or neutral point of a transformer, or on the earthing cable of a motor or generator.
In some cases, reading of the φ0 angle is impossible due to the position of the core balance CT (e.g transformer neutral point or tank earthing cable) or because only one of the two I0 or V0 measurements is necessary or possible. When this is the case, simply check the measured residual current value I0.

2. Turn the generator on.
3. When applicable, apply a V-N voltage set to the rated secondary phase-to-neutral voltage of the VT (i.e. Vns = Uns/$\sqrt{3}$).
4. Inject an I current set to 5 A, and when applicable in phase with the V-N voltage applied (i.e. generator phase displacement α(V-N, I) = 0°).
5. Use the SFT2841 software to check the following:
- the value indicated for the measured I0 residual current is approximately equal to 5 A
- when applicable, the value indicated for calculated V0 residual voltage is approximately equal to the rated primary phase-to-neutral voltage of the VTs (i.e. Vnp = Unp/$\sqrt{3}$)
- when applicable, the value indicated for the phase displacement φ0 (V0, I0) between the I0 current and V0 voltage is approximately equal to 0°
6. Turn the generator off.

Checking of residual voltage input connection
With voltage delivered by 3 VTs in open delta arrangement

Description
Check to be carried out when the residual voltage is delivered by 3 VTs on the secondary circuits connected in an open delta arrangement, and when the residual current is calculated in Sepam or cannot be calculated (e.g.: assembly with 2 CTs) and is therefore not available for the protection function.

Procedure
1. Connect according to the diagram below:
■ the generator voltage terminals to the voltage test terminal box, so as to only supply Sepam's residual voltage input
■ when applicable, the generator current terminals to the current test terminal box, so as to only supply Sepam's phase 1 current input, and therefore obtain a residual current I0Σ = I1.

Block diagram
Note: *the number of VTs connected to the Sepam voltage connector phase inputs is given as an example and is not used for the test.*

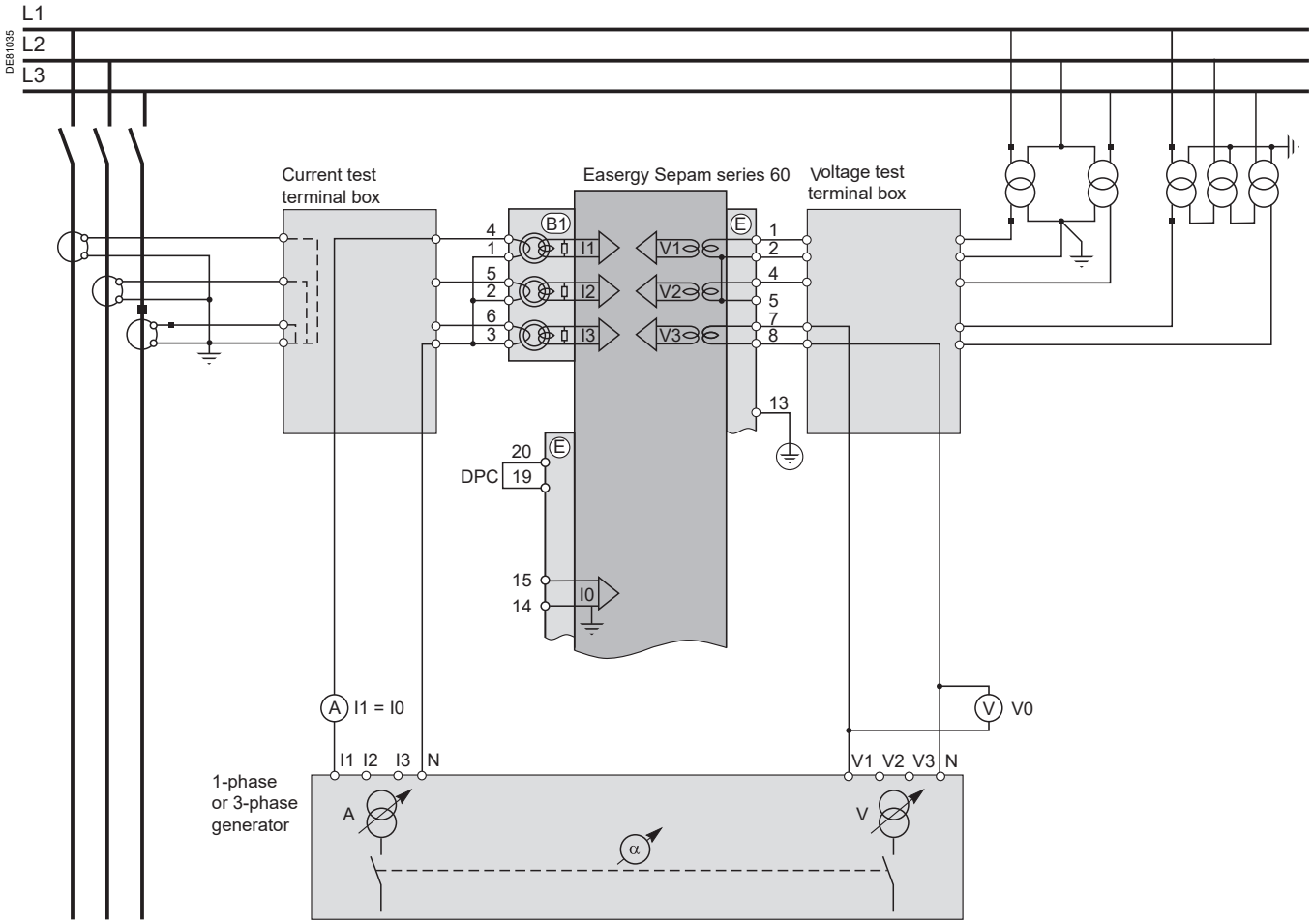

2. Turn the generator on.
3. Apply a V-N voltage set to the rated secondary voltage of the VTs installed in an open delta arrangement (i.e., depending on the case, Uns/$\sqrt{3}$ or Uns/3).
4. When applicable, inject an I current set to the rated secondary current of the CTs (i.e. 1 A or 5 A) and in phase with the voltage applied (i.e. generator phase displacement α(V-N, I) = 0°).
5. Use the SFT2841 software to check the following:
■ the value indicated for the measured V0 residual voltage is approximately equal to the rated primary phase-to-neutral voltage of the VTs (i.e. Vnp = Unp/$\sqrt{3}$)
■ when applicable, the value indicated for the calculated I0Σ residual current is approximately equal to the rated primary current of the CTs
■ when applicable, the value indicated for the phase displacement φ0Σ (V0, I0Σ) between the I0Σ current and V0 voltage is approximately equal to 0°
6. Turn the generator off.

Checking of residual voltage input connection
With voltage delivered by 1 neutral point VT

Description
Check to be carried out when the Sepam residual voltage input is connected to 1 VT installed on the neutral point of a motor or generator (in which case the VT is a power transformer).

Procedure
1. Connect the generator voltage terminals to the voltage test terminal box, so as to only supply Sepam's residual voltage input.

Block diagram

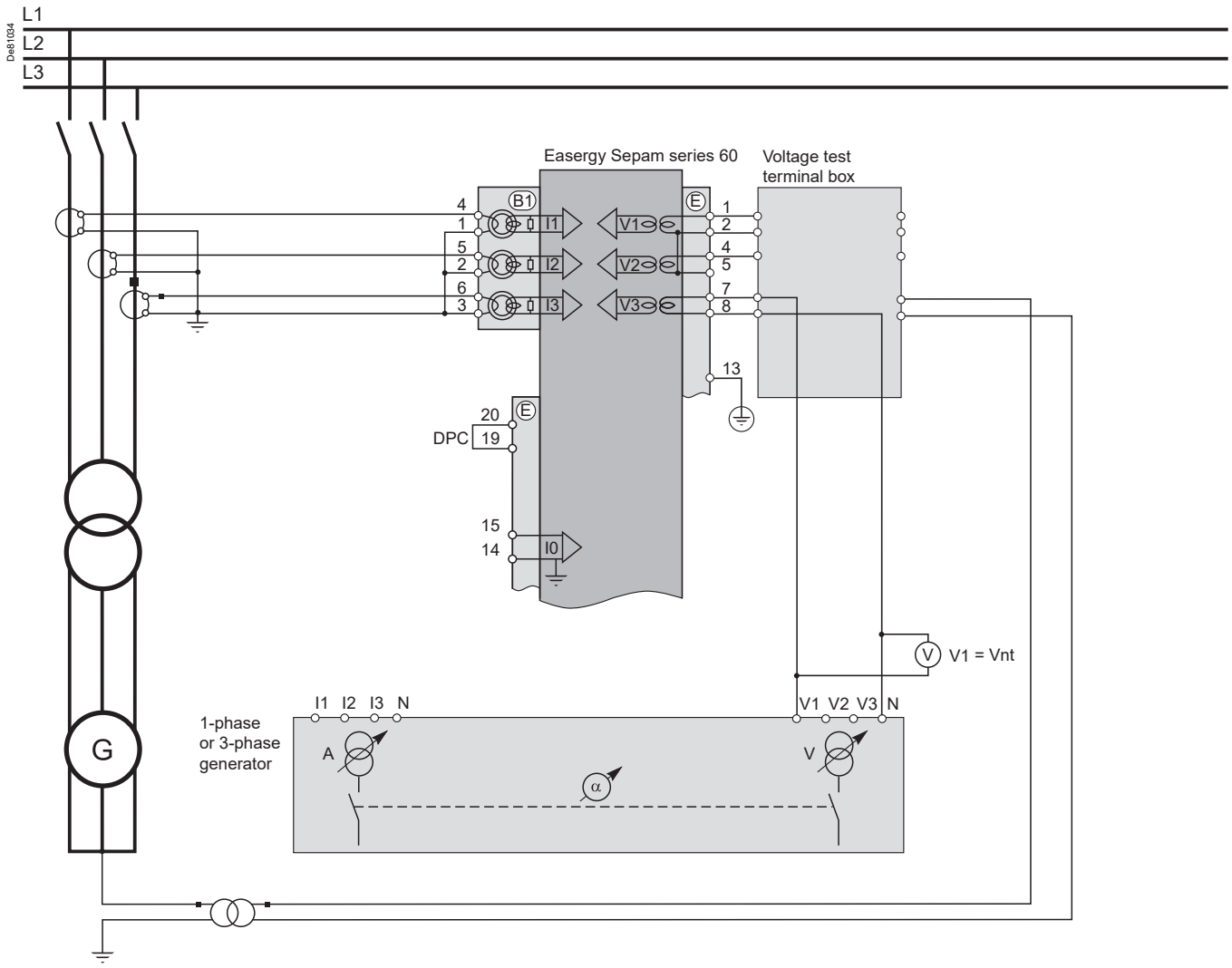

2. Turn the generator on.
3. Apply a V-N voltage set to the rated secondary voltage of the neutral pointt VT (i.e. Vnts).
4. Use the SFT2841 software to check that the measured neutral point voltage Vnt is approximately equal to the rated primary phase-to-neutral voltage of the VTs (i.e. Vnts).
5. Turn the generator off.

Checking of Sepam C60 unbalance current input connections

Description

Check to be carried out on Sepam C60 units with measurement of capacitor unbalance currents, apart from checking of the phase current input connections.
Since the capacitor unbalance currents are not related to the voltages measured by Sepam C60, it is not necessary to inject voltage to check the Sepam C60 capacitor unbalance current input connections.

Procedure

1. Connect the single-phase current generator to the corresponding test terminal box, using the plugs provided, according to the block diagram below.

Block diagram

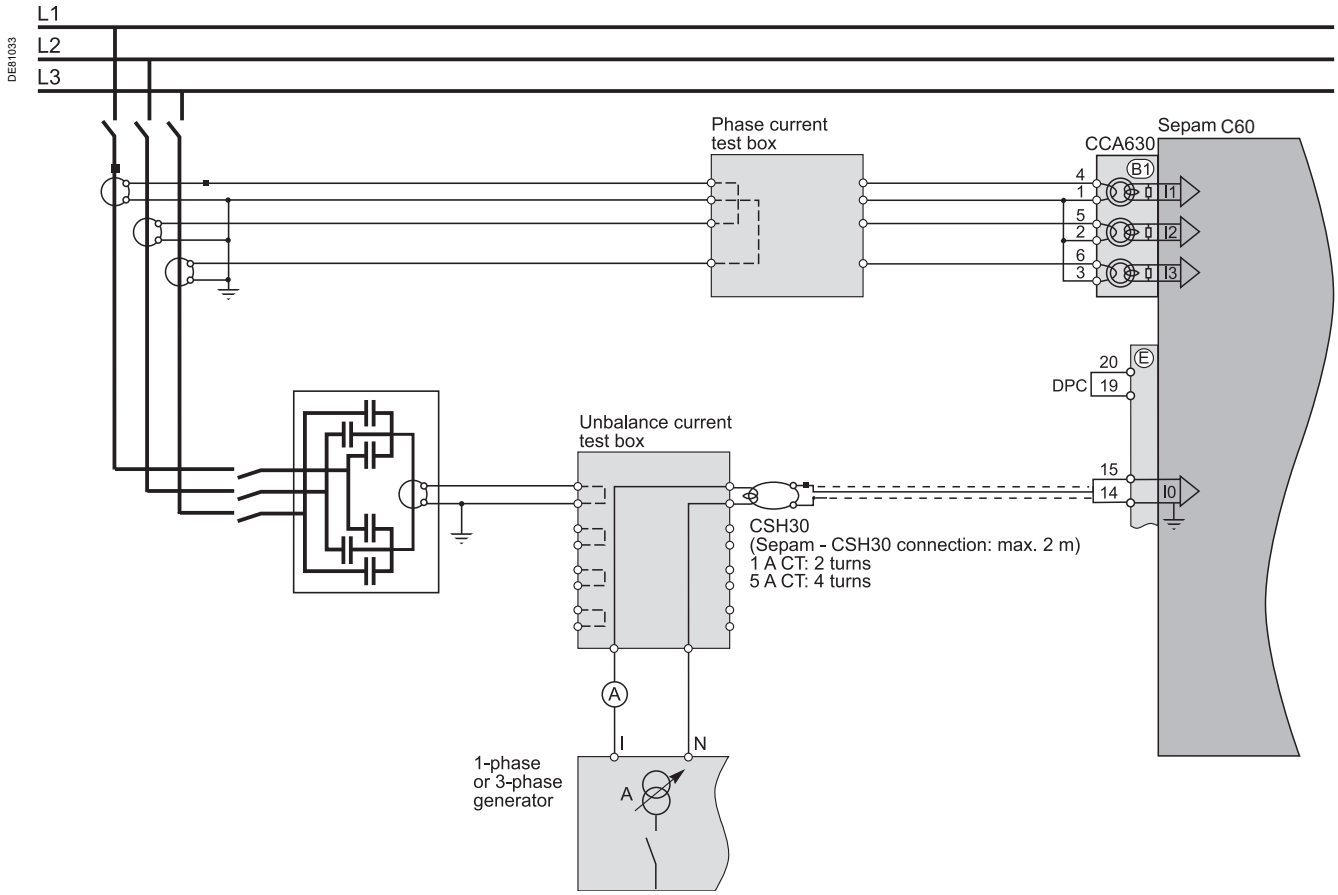

2. Turn the generator on.
3. Inject the generator current I set to the CTs' rated secondary current (i.e. 1 A, or 5 A) to Sepam's unbalance current input (via the test box).
4. Use the SFT2841 software to check that the unbalance current value indicated I0 is approximately equal to the CTs' rated primary current.
5. Turn the generator off.

Checking of logic input and output connections

Checking of logic input connections

PE80427

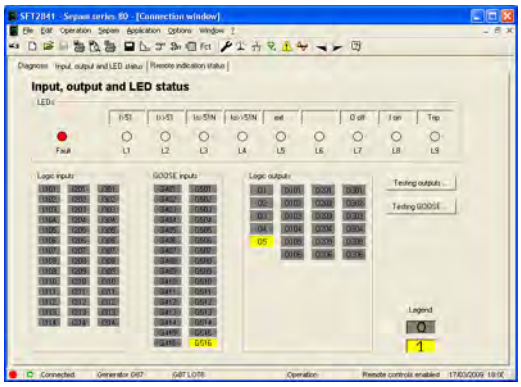

SFT2841: input, output, indicator status.

Procedure

Proceed as follows for each input:

1. **If the input supply voltage is present,** use an electric cord to short-circuit the contact that delivers logic data to the input.
2. **If the input supply voltage is not present,** apply a voltage supplied by the DC voltage generator to the terminal of the contact linked to the chosen input, being sure to comply with the suitable polarity and level.
3. **Observe the change of status of the input** using the SFT2841 software, in the "Input, output, indicator status" screen
4. **At the end of the test**, if necessary, press the SFT2841 [Reset] button to clear all messages and deactivate all outputs.

Checking of logic output connections

PE80428

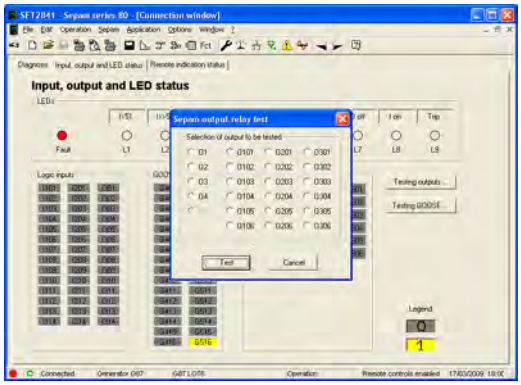

SFT2841: output relay test.

Procedure

Check carried out using the "Output relay test" function, activated via the SFT2841 software, in the "Sepam Diagnosis" screen.
Only output O5, when used for the watchdog, can be tested.
This function requires prior entry of the "Parameter setting" password.

1. Activate each output relay using the buttons in the SFT2841 software
2. The activated output relay changes status over a period of 5 seconds.
3. Observe the change of status of the output relay through the operation of the related switchgear (if it is ready to operate and is powered), or connect a voltmeter to the terminals of the output contact (the voltage cancels itself out when the contact closes).
4. At the end of the test, press the SFT2841 [Reset] button to clear all messages and deactivate all outputs.

Checking of GOOSE logic input connections

PE80429

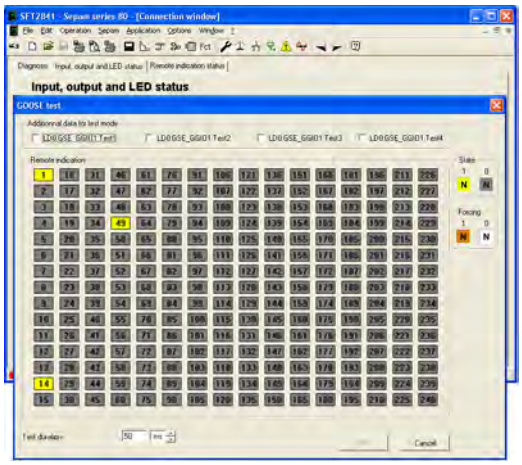

SFT2841: GOOSE logic input test

Procedure

This check is carried out using the "GOOSE test" screen accessed from the "Input, output and LED status" tab in the SFT2841 software.
This screen can be used to perform 2 types of test on GOOSE logic inputs:

- A test by controlling a GOOSE test variable
- A test by forcing remote indications (TS)

Test by controlling a GOOSE test variable

The test by controlling a GOOSE test variable is used to check that IEC 61850 communication is fully operational with all the Sepam units included in the IEC 61850 configuration.
This test allows to activate 4 GOOSE logic input test variables (LD0.GSE_GGIO1_Test1 to LD0.GSE_GGIO1_Test4).
These 4 GOOSE logic input test variables use 4 test data items defined in the IEC 61850 model of the Sepam units.
Using the SFT850 software, the user configures the test logic to be used with these 4 test variables.
Clicking on the [Test] button sets the selected GOOSE test variables to 1 for the duration specified.

Test by forcing remote indications (TS)

The test by forcing remote indications is used to check the configuration of the relays subscribed to the GOOSE inputs to be used and the control logic associated with the GOOSE inputs to which the Sepam is subscribed.
The screen initially displays the actual state of the Sepam remote indications
For each remote indication to be enforced, the test consists of:
1. Select the number of the remote indication to be forced by placing the pointer on the corresponding numbered box. If it exists, the description of the IEC 61850 variable corresponding to the remote indication appears in a pop-up.
2. Check that the remote indication selected matches the IEC 61850 variable displayed in the pop-up.
3. Click on the remote indication(s) to be forced:
   - Click once to force to 0
   - Click twice to force to 1
4. Set the test duration by entering the desired value.
5. Click the [Test] button: All the selected remote indications are forced for the set duration.

This function is available whether the SFT2841 software is connected on the front panel of the Sepam or to a Sepam network.

Checking of optional module connections

MET148-2 module temperature sensor inputs

The temperature monitoring function provided by Sepam T60, T62, M61, G60, G62, C60 units checks the connection of each RTD that is configured.
An "RTD FAULT" alarm is generated whenever one of the RTDs is detected as being short-circuted or disconnected (absent).
To identify the faulty RTD or RTDs:
1. Display the temperature values measured by Sepam using the SFT2841 software.
2. Check the consistency of the temperatures measured:
■ the temperature displayed is "*****" if the RTD is short-circuited (T < -35 °C or T < -31° F)
■ the temperature displayed is "-****" if the RTD is disconnected (T > 205 °C or T > 401° F).

MSA141 module analog output

1. Identify the measurement associated by parameter setting to the analog output using the SFT2841 software.
2. Simulate, if necessary, the measurement linked to the analog output by injection.
3. Check the consistency between the value measured by Sepam and the indication given by the device connected to the analog output.

MCS025 module voltage inputs

Procedure

1. Connect the single-phase voltage generator to the corresponding test terminal box, using the plugs provided, according to the block diagram below.

Block diagram

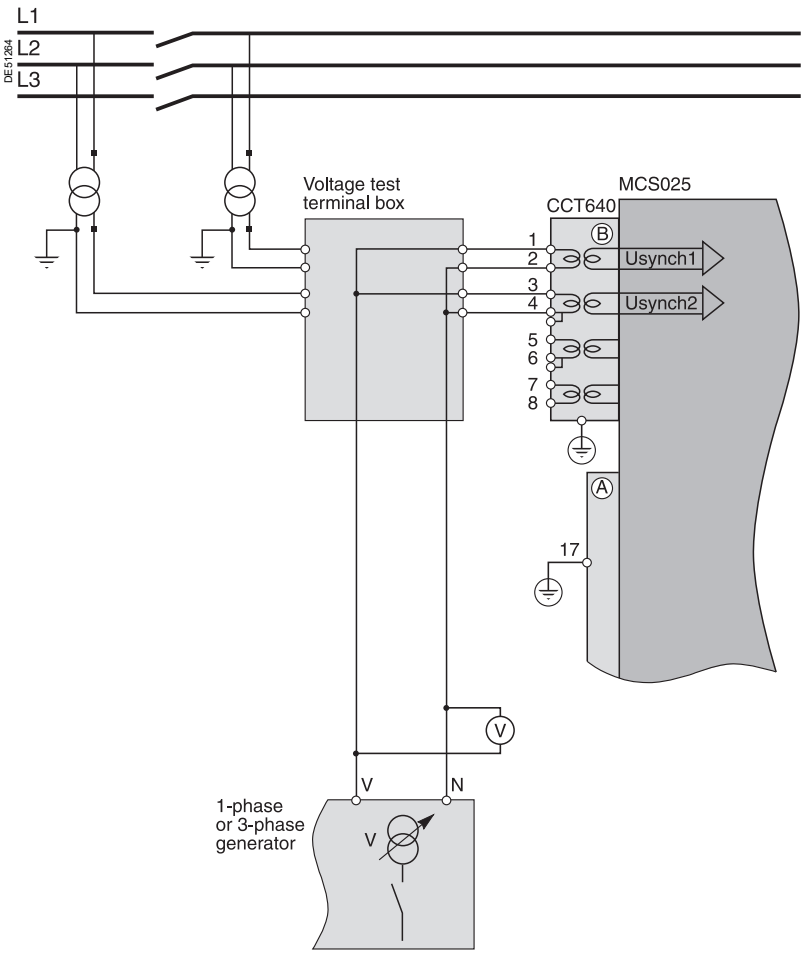

2. Turn the generator on.
3. Apply a voltage V-N set to the rated secondary voltage Vns sync1 (Vns sync1= Uns sync1/$\sqrt{3}$) in parallel between the input terminals of the 2 voltages to be synchronized.
4. Use the SFT2841 software to check that:
■ the measured voltage difference dU, frequency difference dF and phase difference dPhi values are equal to 0
■ the close enable sent by the MCS025 module is received on the Sepam logic input assigned to this function (logic input in 1 status in the "Input, output and LED status" screen).
5. Use the SFT2841 software to check that for the other Sepam units concerned by the "Synchro-check" function the close enable sent by the MCS025 module is received on the logic input assigned to this function (logic input in 1 status in the "Input, output and LED status" screen).
6. Turn the generator off.

Validation of the complete protection chain

Principle

The complete protection chain is validated during the simulation of a fault that causes tripping of the breaking device by Sepam.

Procedure

1. Select one of the protection functions that triggers tripping of the breaking device and separately, according to their incidence in the chain, the function or functions related to the programmed or reprogrammed parts of the program logic.
2. According to the selected function or functions, inject a current and/or apply a voltage that corresponds to a fault.
3. Observe the tripping of the breaking device and the operation of the adapted parts of the program logic.

At the end of all the voltage and current application type checks, put the covers back on the test terminal boxes.

Test sheet
Easergy Sepam series 60

Project: ..... **Type of Sepam** ☐☐☐

Switchboard: ..... **Serial number** ☐☐☐☐☐☐☐☐☐

Cubicle: ..... **Software version** V☐☐☐☐☐

Overall checks

Check off the box ☐ when the check has been made and been conclusive

Type of check	
Preliminary general examination, prior to energizing	☐
Energizing	☐
Parameter and protection settings	☐
Logic input connections	☐
Logic output connections	☐
Validation of the complete protection chain	☐
Validation of the adapted functions (via the logic equation editor)	☐
Analog output connection to the MSA141 module	☐
Temperature sensor input connections to the MET148-2 module	☐
Voltage input connections to the MCS025 module	☐

Checking of phase current and voltage inputs

Check off the box ☐ when the check has been made and been conclusive

Type of check	Test performed	Result	Display	
Phase current and phase voltage input connections	Secondary injection of CT rated current into (B1), i.e. 1 A or 5 A	Rated primary current of CTs connected to (B1)	I1 =.....	☐
			I2 =.....	☐
			I3 =.....	☐
	Secondary injection of phase voltage (the value to be injected depends on the test being performed)	VT rated primary phase-to-neutral voltage Unp/$\sqrt{3}$	V1 = ...	☐
			V2 = ...	☐
			V3 = ...	☐
		Phase displacement φ(V, I) ≅ 0°	φ1 =.....	☐
			φ2 =.....	☐
			φ3 =.....	☐
Residual current input connections	Injection of 5 A into the core balance CT primary circuit	Injected current value I0	I0 =.....	☐
	When applicable, secondary injection of the rated phase-to-neutral voltage of a phase VT Uns/$\sqrt{3}$	VT rated primary phase-to-neutral voltage Unp/$\sqrt{3}$	V0 = ...	☐
		Phase displacement φ0(V0, I0)≅ 0°	φ0 =.....	☐

Tests performed on:	**Signatures**
By:	

Comments:

.....

.....

.....

Test sheet
Easergy Sepam series 60

Project: ..... **Type of Sepam** ☐☐☐

Switchboard: ..... **Serial number** ☐☐☐☐☐☐☐☐

Cubicle: ..... **Software version** V☐☐☐☐

Residual current and voltage input checks

Check off the box ☐ when the check has been made and been conclusive

Type of check	Test performed	Result	Display
Residual voltage input connection To 3 VTs in open delta arrangement	Secondary injection of the rated voltage of the VTs in an open delta arrangement (Uns/$\sqrt{3}$ or Uns/3)	VT rated primary phase-to-neutral voltage Unp/$\sqrt{3}$	V0 = ... ☐
	When applicable, secondary injection of CT rated current, i.e. 1 A or 5 A	CT rated primary current	I0Σ = ... ☐
		Phase displacement φ0Σ(I0, I0Σ)	φ0Σ = ... ☐
To 1 neutral point VT	Secondary injection of the rated voltage of the neutral point VT (Vnts)	VT rated primary phase-to-neutral voltage Vntp	Vnt = ... ☐
Residual current and residual voltage input connections	Injection of 5 A into the core balance CT primary circuit	Injected current value I0	I0 = ... ☐
	Secondary injection of the rated voltage of the VTs in an open delta arrangement (Uns/$\sqrt{3}$ or Uns/3)	VT rated primary phase-to-neutral voltage Unp/$\sqrt{3}$	V0 = ... ☐
		Phase displacement φ0(V0, I0)≅ 0°	φ0 = ... ☐
Sepam C60: unbalance current input connections	Secondary injection of the CT rated current, i.e. 1 A or 5 A	CT rated primary current	I0 = ... ☐

Tests performed on: .....

By: .....

Signatures

Comments:

.....

.....

.....

Nothing happens when Sepam is switched on:

- all LEDs off
- nothing displayed on Sepam display.

There is probably an auxiliary power fault.	
Possible cause	**Action / remedy**
Connector A not plugged in.	Plug in connector A.
Connectors A and E reversed.	Put connectors in correct positions.
Auxiliary power absent.	Check the auxiliary power level (range = 24 V DC to 250 V DC).
Polarities reversed on terminals 1 and 2 of connector A.	Check that the + polarity is on terminal 1 and the – polarity on terminal 2. Correct if necessary.
Internal problem.	Change base unit (see page 477)

Compatibility of Sepam version/SFT2841 version

The About SFT2841 screen indicates the minimum version of the SFT2841 software that is compatible with the Sepam being used.

To display this screen on the Sepam UMI:

- Press the button.
- Select the General menu.
- The About SFT2841 screen can be found just after the About Sepam screen.

Check that the SFT2841 software version you are using is higher than or the same as that indicated on the Sepam screen.

If the SFT2841 software version is lower than the minimum version compatible with the Sepam being used, the SFT2841 software cannot be connected to Sepam and the SFT2841 software displays the following error message: SFT2841 software version incompatible with the connected device.

DE81032

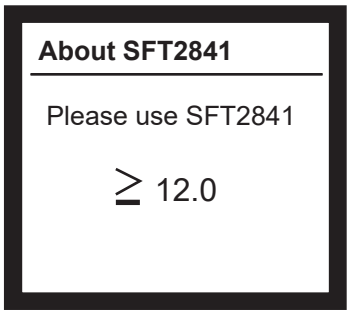

SFT2841 compatible version screen.

Troubleshooting assistance

PE50359

Major faults are only cleared after the cause of the fault is corrected and Sepam is switched on again.

MAJOR fault: Sepam is in fail-safe position

- ON LED of UMI on in front
- LED of UMI on in front

or LED of DSM303 remote advanced UMI flashing

- green LED on rear panel on
- red LED on rear panel on.

Note : *The list of self-tests which place Sepam in the fail-safe position can be found in the Control and monitoring functions chapter.*

PE50139

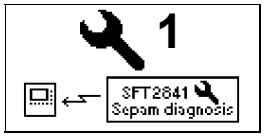

Fault message on display: major fault

Connection cannot be made with SFT2841	
Possible cause	**Action / remedy**
Memory cartridge absent.	Switch off Sepam. Install the memory cartridge and secure it by tightening the 2 integrated screws. Switch Sepam on again
Major internal fault.	Change base unit (see page 477).

Connection can be made with SFT2841	
Possible cause	**Action / remedy**
SFT2841 indicates major fault, but no missing module: Base unit internal fault.	Change base unit.
Memory cartridge not compatible with version of the base unit (see below).	Note the version using the SFT2841 software, Diagnosis screen. Contact the local support team.
The hardware configuration is incorrect or incomplete.	Use the SFT2841 software, in connected mode, to determine the cause. The SFT2841 Diagnosis screen displays the missing items in red (see table below).

Check on hardware configuration using SFT2841		
Diagnosis screen	**Possible cause**	**Action / remedy**
CCA630, CCA634, CCA671 connector in **B1** position displayed in red.	Connector absent.	Install a connector. If the connector is present, check that it is plugged in correctly and held in place by the 2 screws.
	LPCT sensors not connected.	Connect the LPCT sensors.
Connector in position **E** displayed in red.	Connector **E** unplugged or no jumper between terminals 19 and 20.	Plug in connector E. Fit the jumper.
MES120 module in **H1** or **H2** position displayed in red.	MES120 module absent.	Install MES120 module. If the MES120 module is present, check that it is plugged in correctly and held in place by the 2 screws. If the fault is still present, replace the module.

PE10156



Fault message displayed if cartridge is not compatible.

Rules on compatibility between the cartridge and the base unit

The major index of the base-unit version must be greater than or equal to the major index of the cartridge-application version.

Example: The base unit with a version V1.05 (major index = 1) and an application with a version V2.00 (major index = 2) are not compatible.
If this rule is not observed, a major fault occurs and Sepam displays the message opposite.

Troubleshooting assistance

MINOR fault: Sepam is operating in downgraded mode

- ON LED of UMI on in front
- LED of UMI flashing in front
- green LED on rear panel on
- red LED on rear panel flashing.

Note : *The list of self-tests which place Sepam in downgraded operation mode can be found in the Control and monitoring functions chapter.*

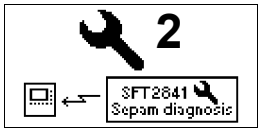

Fault message on display: inter-module link fault.

Inter-module link fault	
Possible cause	**Action / remedy**
Faulty wiring.	Check remote module connections: RJ45 plugs of CCA77x cords clipped correctly into sockets.

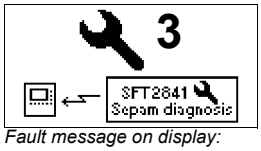

Fault message on display: MET148-2 not available.

MET148-2 **module not available**		
LEDs	**Possible cause**	**Action / remedy**
MET148-2 green and red LEDs off.	Faulty wiring.	Check module connections: RJ45 plugs of CCA77x cords clipped correctly into sockets.
MET148-2 green LED on. MET148-2 red LED off.	No response from MET148-2 module.	Check the position of the module number selection jumper: ■ MET1 for first MET148-2 module (temperatures T1 to T8) ■ MET2 for second MET148-2 module (temperatures T9 to T16). ■ If the jumper position needs to be changed, reboot the MET148-2 module (by disconnecting and reconnecting the interconnection cord).
MET148-2 red LED flashing.	Faulty wiring, MET148-2 powered but loss of dialogue with base unit.	Check module connections: RJ45 plugs of CCA77x cords clipped correctly into sockets. If the MET148-2 module is the last in the chain, check that the line terminating jumper is in the **Rc** position. In all other cases, the jumper should be in the position marked ~~Rc~~.
MET148-2 red LED on.	More than 3 remote modules connected to connector D1 on base unit.	Remove a remote module.
	MET148-2 module internal fault.	Change MET148-2 module.

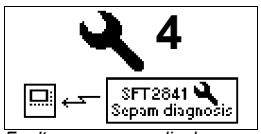

Fault message on display: MSA141 not available.

MSA141 module not available		
LEDs	**Possible cause**	**Action / remedy**
MSA141 green and red LEDs off.	Faulty wiring, MSA141 not powered.	Check module connections: RJ45 plugs of CCA77x cords clipped correctly into sockets.
MSA141 green LED on. MSA141 red LED flashing.	Faulty wiring, MSA141 powered but loss of dialogue with base unit.	Check module connections: RJ45 plugs of CCA77x cords clipped correctly into sockets. If the MSA141 module is the last in the chain, check that the line terminating jumper is in the **Rc** position. In all other cases, the jumper should be in the position marked ~~Rc~~.
MSA141 red LED on.	More than 3 remote modules connected to connector D1 on base unit.	Remove a remote module.
	MSA141 module internal fault.	Change MSA141 module.

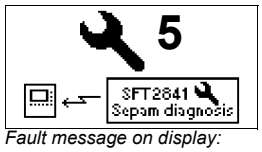

Fault message on display: MCS025 not available.

MCS025 module not available		
LEDs	**Possible cause**	**Action / remedy**
MCS025 LED flashing.	Faulty wiring, MCS025 powered but loss of dialogue with base unit.	Check that a CCA785 cord is used with orange RJ45 plug on MCS025 end. Check module connections: RJ45 plugs of CCA785 cord clipped correctly into sockets.
MCS025 LED on.	Internal fault or MCS025 fault.	Check connections (DPC function - detection of plugged connector).

DSM303 module not avaliable		
LEDs	**Possible cause**	**Action / remedy**
DSM303 LED on and display off.	Module internal fault.	Replace the DSM303 module.

Faulty Sepam UMI		
Display	**Possible cause**	**Action / remedy**
Advanced or mimic-based UMI display off.	Display internal fault.	Replace the base unit. See page 477.

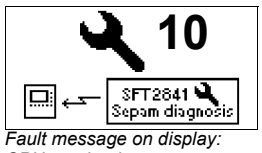

Fault message on display: CPU overload.

Detection of Sepam CPU overload	
Possible cause	**Action / remedy**
The application configured exceeds the CPU capacity of the Sepam unit.	Switch off some protection functions. For further information, contact your local support center.

Alarms

"METx FAULT" message.

RTD fault	
Possible cause	**Action / remedy**
An RTD on a MET148-2 module is disconnected or short-circuited.	Since the alarm is common to the 8 channels of the module, go to the temperature measurement display screen to determine which channel is affected by the fault. Measurement displayed: Tx.x = -**** = RTD disconnected (T > 205 °C (401 °F)) Tx.x = **** = RTD short-circuited (T < -35 °C (-31 °F))

"**BATTERY LOW**" message.

Battery fault	
Possible cause	**Action / remedy**
Battery low, absent or incorrectly installed.	Replace the battery. See page 477.

Replacing the base unit
Replacing the battery

PE80779



Memory cartridge accessed from the front.

Replacing the base unit

The memory cartridge is easily accessible and can be removed from the front of Sepam. It reduces the duration of maintenance operations.
When a base unit fails, simply:
1. Switch off Sepam and unplug connectors
2. Remove the memory cartridge
3. Replace the faulty base unit with a replacement unit (no memory cartridge) put the memory cartridge in the new base unit
4. Plug in the connectors and switch Sepam on again.

If there are no compatibility problems (see page 474), Sepam is operational with all its standard and customized functions, without requiring any reloading of protection and parameter settings.

Replacing the battery

Characteristics

1/2AA format 3.6 V, 0.8 Ah lithium battery
Recommended models:
- SAFT model LS14250
- SONNENSCHEIN model SL-350/S

Recycling the battery

The used battery should be sent to a certified recycling company in compliance with the European Directive 91/157/EEC OJ L78 dated 26.03.91 on batteries and accumulators containing certain dangerous materials, modified by directive 98/101/EEC OJ L1 dated 05.01.1999.

Replacement

1. Lift off the protective battery cover after removing both fixing screws.
2. Change the battery, being sure to use the correct type and polarity.
3. Replace the protective battery cover and both fixing screws.
4. Recycle the used battery.

Note : *The battery can be replaced with the Sepam energized.*

Maintenance tests

⚠ ⚠ DANGER

HAZARD OF ELECTRIC SHOCK, ELECTRIC ARC OR BURNS

- Only qualified personnel should maintain this equipment. Such work should be performed only after reading this entire set of instructions.
- NEVER work alone.
- Obey all existing safety instructions when commissioning and maintaining high-voltage equipment.
- Beware of potential hazards and wear personal protective equipment.

Failure to follow these instructions will result in death or serious injury.

General

The logic inputs and outputs and the analog inputs are the parts of Sepam least covered by the self-tests. (The list of Sepam self-tests can be found in the Control and monitoring functions chapter).
They should be tested during a maintenance operation.
The recommended interval between preventive maintenance operations is 5 years.

Maintenance tests

To perform maintenance on Sepam, see Chapter 7, page 453. Carry out all the recommended commissioning tests according to the type of Sepam to be tested, except for the test specific to the differential function which is not necessary. If the MCS025 Synchro-check module is present, test its voltage inputs as well.

First test all the logic inputs and outputs involved in tripping the circuit breaker.
A test of the complete chain including the circuit breaker is also recommended.

Firmware modifications
Application cartridge firmware

The table below describes the firmware version history of the Easergy Sepam series 60 application cartridge. The following information is provided for each firmware version:
- release date,
- compatible SFT2841 version,
- improvements,
- new features added.

Firmware version	Firmware version release date	SFT2841 version compatibility	Improvements	New features
V7.10	May 2011	V12 or above		■ Creation of the Sepam series 60 based on the firmware of the Sepam series 80 version 5.26.
V8.01	December 2012	V13 or above	■ Protection 48/51LR: integration of the zero speed bit from 49RMS. ■ Protection 50/51: the H2 restraint on Max(I) is applied to the additional channels. ■ Protection 59: the drop out/pick up ratio rises to 99% and the setting interval changes from 1% to 0.5%. ■ Protection 66: modification of parameters to manage the number of hot starts and number of cold starts. Upward and downward compatibility with the previous version. ■ Protection 81H: Modification of the resolution (0.01 Hz), the reset difference (0.05 Hz), the setting range (fN-1 Hz to fN+5 Hz) and the blocking range (20% to 90% Un). ■ Protection 81L: Modification of the resolution setting (0.01 Hz), the reset difference (0.05 Hz), the setting range (fN-10 Hz to fN+1 Hz) and the blocking range (20% to 90% Un). ■ Notification by remote indication when a disturbance recording is available. ■ I'n pick up from 30 A to 40 A. ■ Logic discrimination: Inhibition of the logic discrimination blocking order (formerly fixed at 200 ms) can be configured.	■ Management of the new extended cartridge model (twice the number of disturbance recordings + new MSR/MST/DLG functions). ■ Protection 27: addition of setting using a custom curve. ■ Protection 49RMS: addition of thermal model with 2 constants whose entry can be configured by a genetic algorithm. Option of configuring the transformer type in the transformer scenario. ■ Protection 78PS: extension of choice (equal-area criterion, power swing, internal angle calculation) and combined use (areas and power swing, angle and power swing) of protection principles. ■ Phase rotation direction managed by the communication (GOOSE, Modbus, etc.). ■ MSR (Motor Start Report) function: archiving of 2 to 144 s of measurements upon motor tripping. Downloading of COMTRADE files via the SFT2841 software, supervision software, ACE 850 and ACE969 (TP and FO). MSRs displayed on integrated advanced UMI or ■ integrated mimic-based UMI. ■ MST (Motor Start Trend) function: storage of changes (min, max, average of MSR measurements) in 144 samples over a 30-day period. Management of 12 to 18 periods depending on the cartridge model. Trends displayed on integrated advanced UMI or ■ integrated mimic-based UMI. Downloading of COMTRADE files via the SFT2841 software, supervision software, ACE 850 and ACE969 (TP and FO). DLG (Data LoG) function: archiving of measurements offered by SEPAM over a period from 1 s to 30 days, management of 1 to 20 periods depending on the cartridge model. Downloading of COMTRADE files via the SFT2841 software, supervision software, ACE 850 and ACE969 (TP and FO).
V8.02	May 2013	V13 or above	■ Synchronization context: Initial context date forced to 2000/00/00 00:00:0000 when no other context is present. ■ Disturbance record: If a power loss occurs during a disturbance recording, CFG indicates the number of valid samples before power loss. The next samples have the value 0, ■ Digital I/O: Input status is taken into account only when the end of the initialization is effective, ■ Improved accuracy on the trip time of the 50BF, ■ Modbus: stabilization of the TS240 “Ethernet communication fault" transmission by increasing the number of confirmations, ■ Logic selectivity: blocking is achieved if the circuit breaker is in the closed position. Reset of protections occurs only when the breaker is in closed position, ■ The rounding of the calculation of the nominal active power is reviewed to coincide with SFT2841 software one, ■ Disturbance: the "nrate" bit is set to 0 instead of 1 to allow the COMTRADE reader to use the date of each point instead of a fixed sampling, ■ Fixed an issue causing the Sepam fallback on an avalanche warning issued by the Logipam.	
V8.03	August 2013	V13 or above	■ Fixed an issue when loading some files that result Logipam definitive fallback ■ ECI850 : Improvement to enable unloading DataLog files configured in a circular mode.	
V8.04	February 2014	V13 or above	■ Modbus : improved management of the saturation of stamped events stacks to avoid returning again already issued events ■ Modbus : synchronisation du bit "perte info" du mot de contrôle avec la saturation réelle de la pile.	
V9.03	December 2014	V15 or above	■ Automatic transfer (AT) : Back to the nominal frequency of the frequency control in 200 ms instead of 5 s when the voltage is less than 20% of Unp, ■ Improved main channels réinitalisation of the 50N/51N protections in factory parameters reinitialization.	■ Creation of a second 6.25 kA...15 kA setting range for Unp ° 20 kV.
V10.00	April 2021	V17 or above	■ Possibility for the user to invalidate the automatic operation "Self-Learning Motor Protection Setting" of the protection and to add a Manual set of parameter. ■ Possibility for the user to display the "Safety time before start” whatever the state of the motor.	

Firmware modifications
Base firmware

The table below describes the firmware version history of the Easergy Sepam series 60 bases. The following information is provided for each firmware version:
- release date,
- compatible SFT2841 version,
- improvements,
- new features added.

Base firmware version	Firmware version release date	SFT2841 version compatibility	Improvements	New features
V7.20	May 2011	V12 or above		■ Creation of a common base firmware platform for the Sepam series 80 and for the new Sepam series 60.
V8.01	December 2012	V13 or above		■ MSR, MST and DLG new files handling. ■ Effective rotation direction in 32-bit diagnosis zone
V9.00	December 2014	V15 or above		
V10.00	April 2021	V17 or above		

Firmware modifications
Cartridge and base firmware compatibility table

Respect the compatibility between the Easergy Sepam series 80 cartridge and the base according to the following table.

Version of firmware	Base			
Cardridge	7.XX	8.XX	9.XX	10.XX
7.XX	■	□	□	□
8.XX	-	■	□	□
9.XX	-	-	■	□
10.XX	-	-	-	■

■ Compatible with all features
□ Compatible but with limited features
- Not compatible

Note : The latest version of Sepam firmware is compatible with all the Sepam hardware versions.

Notes

ART.838008 © 2021 Schneider Electric - All rights reserved

Schneider Electric Industries SAS
35, rue Joseph Monier
CS 30323
F - 92506 Rueil-Malmaison Cedex
RCS Nanterre 954 503 439
Capital social 896 313 776 €
www.schneider-electric.com

As standards, specifications and designs change from time to time, please ask for confirmation of the information given in this publication.



Printed on recycled paper.

Production: Schneider electric
Publication: Schneider Electric
Printed:

SEPED310017EN/6

01/2021